JDRF

ELECTROMAG

AUTONOMY SENSOR DATASHEET

AUTONOMY SENSOR DATASHEET

OVERVIEW

AUTONOMOUS LIGHTING CONTROL

The Autonomy Sensor is an integrated sensing and control device that **self-commissions** a luminaire-level lighting control (LLLC) system. Upon power up, Autonomy Sensors provision a secure wireless mesh-network and configure motion, daylight, and wall-mounted control groups by discovering the lighting arrangement and analyzing the motion patterns and daylight distribution levels throughout the space. Groups dynamically adapt to changes in the environment (floor-plan/lighting arrangement modifications, addition/removal of devices) while maintaining compliance with the latest energy standards. No manual setup or human supervision is required to start or maintain the self-commissioning process.

ON-BOARD HARDWARE

The Autonomy Sensor is equipped with a suite of on-board sensing, processing, and communication hardware needed to self-configure, run, and maintain a complete LLLC system. Each sensor contains the following on-board hardware:

1. Near Infrared (NIR) optical system for localizing co-located JDRF Electromag devices.
2. 2.4 GHz wireless radio to communicate with other JDRF Electromag devices.
3. D4i interface to communicate with the LED driver.
4. Motion sensor for detecting occupants.
5. Daylight sensor for measuring the ambient light level.

JDRF ELECTROMAG

AUTONOMY SENSOR DATASHEET

OVERVIEW

APPLICATION AREAS	Indoor commercial lighting for general illumination, architectural, and retail applications. Designed to meet the ASHRAE 90.1 2022 standard.
LIGHTING TYPE	Works with linear, suspended, recessed, track, and down/compact lighting that is equipped with a D4i compliant LED driver/control gear.
EMERGENCY LIGHTING	The Emergency Autonomy Sensor is a UL 924 certified device that ellim-inates the need for an in-fixture transfer relay or a connection to the normal power circuit to sense the loss of normal power. See the Emergency Light-ing section for more information.
SYSTEM ARCHITECTURE	The decentralized system architecture has no single-points-of-failure and provides maximum control persistence. Does not require external hardware (i.e. controller, gateway or bridge) or an Internet connection to run energy conservation, facility management, personal control, or self-configuration features. All settings are locally stored in non-volatile memory.
MODELS	The Autonomy Sensor is available several variants to meet various aesthetic, installation height and functional requirements. See the Ordering Info section for a complete list of available options.
ACCESSORIES	Several mounting options supported for installation to ceiling tile, drywall, junction boxes, and other surface. See Installation section for details.

JDRF ELECTROMAG

AUTONOMY SENSOR DATASHEET

OVERVIEW

ENERGY CONSERVATION	Supports configurable advanced energy conservation strategies. 1. High-End Trim (see details on page 6). 2. Motion Detection (see details on page 8). 3. Daylight Harvesting (see details on page 10). 4. Scheduling (Wall Switch, Touch Screen or Gateway required).
PERSONALIZATION	Provides personalized light levels from a variety of user devices. 1. Mobile application (provided by JDRF Electromag). 2. Wall Switch for variable brightness control. 3. Touch Screen for variable brightness and scene control.
ANALYTICS	Enables optimization by providing insight into key performance metrics. 1. Power and energy. 2. Diagnostics. 3. Commissioning reports.
INTEGRATION	Integrates with third party system to achieve total building management. 1. Fire Alarm (Switch Pack required). 2. Demand response (Gateway required). 3. Building Automation System (Gateway required).

JDRF ELECTROMAG

AUTONOMY SENSOR DATASHEET

SPECIFICATIONS

POWER	Voltage: NEC Class 2 (9.5-22.5 VDC). Current: 46 mA (maximum). Wiring: 2x18 AWG.
WIRELESS	Communication Protocol: Wireless Mesh. Frequency: 2.4GHz. Latency: 50 ms (3-sigma). Modulation Type: Frequency-Shift Keying. Data Rate: 2 MBps (maximum).
SYSTEM	Maximum distance between sensors for NIR detection: 1.3 x mounting height. Maximum distance between sensors for RF communication: 10 m (33 ft).
ENVIRONMENT	Temperature: 0-40°C (32-122° F). Humidity: 0-90% (non-condensing). Environment: dry indoor use only.
STANDARDS	1. cULus listed 8750, CSA22.2 No. 250.13. 2. UL 2043 plenum. 3. IEC 61347-1 Part 1, 61347-2-11 Part 2-11. 4. FCC Class A Part 15 Subpart C, ISED RSS-247. 5. PSA Certified Level 1 Device (pending). 6. UL 924 Emergency Lighting and Power Equipment, Edition 10, Revision Date 12/14/2022, CSA C22.2 No. 141, Emergency Lighting Equipment, Edition 5, Issue Date 06/2015 (Emergency Sensor Models).

c UL us LISTED

JDRF ELECTROMAG

AUTONOMY SENSOR DATASHEET

SPECIFICATIONS

HIGH-END TRIM

High-end trim compensates for lumen degradation by adjusting the light output as a function of run-time. It is enabled by default and can be viewed and configured by the mobile application.

PARAMETER	DEFAULT VALUE	OPTIONAL VALUE(S)
High-end trim	Enabled	Disabled
High-end trim level	80% light intensity	20-100% light intensity

VARIABLE BRIGHTNESS

The dynamic range of 0-100% light output is quantized into 256 discrete levels/steps to provide the perception of continuous dimming. The dimming curve is logarithmic and complies with IEC 62386-102.

INDIVIDUAL ADDRESSABILITY

Each Autonomy Sensor has a unique system-generated network address, allowing every luminaire to be controlled individually, regardless of electrical wiring. The dynamic publish/subscribe model allows areas/groups/zones to be automatically created where multiple devices are to operate in unison. Membership in any area/group/zone can be manually configured from the mobile application.

SELF-CONFIGURED AREAS

The Area Management algorithm runs on each Autonomy Sensor, allowing a set of Autonomy Sensors to determine co-location in the same room. Once co-location has been determined, data and control messages can be exchanged on an individual device or on an area basis.

AUTONOMY SENSOR DATASHEET

SPECIFICATIONS

LED DRIVERS & BRIDGES	Compatible with D4i Compliant LED drivers and control gear (i.e. DALI to 0-10V bridge devices). See Autonomy Sensor product page for a reference list of pre-qualifeid third-party LED drivers.
WARRANTY	1. Standard: 5-year limited manufacturers warranty. 2. Extended: contact sales representative for details.

JDRF ELECTROMAG

AUTONOMY SENSOR DATASHEET

MOTION DETECTION

SELF-CONFIGURED MOTION GROUPS

Motions Groups are automatically self-configured based on co-location and the similarity in motion patterns among neighboring Autonomy Sensors. The Area management algorithm ensures that group membership is limited to sensors that are co-located in the same room. Membership in a motion group is dynamic, adapting to changes in the lighting arrangement, layout of the space, and the addition, removal, replacement and relocation of sensors. The mobile application can be used to modify motion group membership.

ASHRAE 90.1 COMPLIANCE

A single motion group is limited to 17 sensors, corresponding to an area that is less than 2,500 ft².

COVERAGE AREA

AUTONOMY SENSOR MODELS		AUTONOMY SENSOR LOW BAY MODELS	
MOUNTING HEIGHT (m/ft)	COVERAGE AREA (m²/ft²)	MOUNTING HEIGHT (m/ft)	COVERAGE AREA (m²/ft²)
2.7 / 9	10.5 / 113	4.3 / 14	25.4 / 273.7
3.0 / 10	12.7 / 137	4.9 / 16	33.2 / 357.4
3.4 / 11	15.5 / 167	5.5 / 18	42.0/ 452.4
3.7 / 12	18.2 / 196	6.1 / 20	51.9 / 558.5

DETECTION TECHNOLOGY

Optical NIR detection. Major and minor Motion: complies with NEMA WD-7-2011. Can be placed near air ducts (no minimum distance).

JDRF ELECTROMAG

AUTONOMY SENSOR DATASHEET

MOTION DETECTION

OCCUPANCY PROFILE

The default occupancy profile is listed below. All settings can be modified from the mobile application.

PARAMETER	DEFAULT VALUE	OPTIONAL VALUE(S)
Control mode	Occupancy (auto-on, manual-off)	Vacancy (manual-on, manual-off)
Occupancy level	50% light intensity	0-100% power / light intensity
Occupancy hold-time	20 min	15 sec - 20 min
Transition 1-3 actions	Reduce current level by 50%	Set light to max/min/off, do nothing.
Transition 1-3 hold-times	10 sec	10 sec - 4 hrs
Vacancy level	Off	0-100% power / light intensity

WALK-THROUGH MODE

The walk-through mode can be enabled to avoid excess energy usage in areas that are briefly occupied. Where enabled, when motion is detected, light(s) go to the walk-through level for 30 seconds (the walk-through hold-time). When the walk-through hold-time expires, a walk-through dwell-time of 2 minutes is started. If motion is detected during the walk-through dwell-time, the occupancy profile above is followed. Otherwise, the luminaire is set to the vacancy level.

PARAMETER	DEFAULT VALUE	OPTIONAL VALUE(S)
Walk-through mode	Disabled	Enabled
Walk-through level	50% light intensity	0-100% power / light intensity
Walk-through hold-time	30 sec	1 - 60 sec
Walk-through dwell time	2 min	N/A

JDRF ELECTROMAG

AUTONOMY SENSOR DATASHEET

DAYLIGHT HARVESTING

SELF-CONFIGURED DAYLIGHT GROUPS

Daylight Groups are automatically self-configured based on co-location and similarity of ambient lighting conditions among neighboring Autonomy Sensors. The Area management algorithm ensures that group membership is limited to sensors that are co-located in the same room. Membership in a daylight group is dynamic, adapting to changes in the lighting arrangement, layout of the space, and the addition, removal, replacement and relocation of sensors. The mobile application can be used to modify daylight group membership.

ASHRAE 90.1 COMPLIANCE

Primary Daylight Group

A single (primary) daylight group is created in an area where the total maximum power consumption is 300 W (± 20%) or less. The primary daylight group is configured immediately upon formation of the Area.

Secondary Daylight Group

Two independently controlled daylight groups (primary and secondary) are created in an Area where the total maximum power consumption is greater than 300W (± 20%). The primary and secondary daylight groups may required up to 24 hours to be configured.

CONTROL MECHANISM

The luminaire light level is adjusted between in response to ambient lighting conditions using closed-loop continuous control. The maximum light level is dynamic and determined by the prevailing user override, schedule, or occupancy level. The control loop will only reduce the light level from the current value. The minimum level is user selectable and has a default of 20% brightness. Dim-to-off is supported and can be enabled from the mobile application.

SET-POINT

Control set-point: 40 lx (default). Set-point can be modified from the mobile application. Actual ambient light reading is viewable from the mobile application.

JDRF ELECTROMAG

AUTONOMY SENSOR DATASHEET

ANALYTICS

SELF-DIAGNOSTIC

Continuous self-diagnosis is run and results are displayed on the indicator LED.

1. Self-diagnostic pass: On for 0.5 seconds every 30 sec.
2. Self-diagnostic fail (internal error): On for 0.5 seconds, off for 1 sec.
3. Self-diagnostic fail (external error): On for 0.5 seconds, off for 3 sec.

LED driver goes to the 'system failure level' if there is no heart-beat signal issued by the sensor. Error details are available from the Mobile Application.

NETWORK PERFORMANCE

The network performance between a device and any 1st or 2nd degree neighbor can be tested and documented using the mobile application. During the network performance test, a pair of devices will exchange thousands of messages to determine the following performance metrics:

1. Average (mean) round-trip latency in ms.
2. The standard deviation latency in ms.
3. The 3-sigma round trip latency in ms.
4. The average (mean) RSSI by channel.

ENERGY MEASUREMENT

The power consumed by the light fixture is measured using an electrical meter contained within the D4i-compliant LED driver. The Autonomy Sensor reads the power measurement over the D4i interface and transmits it over the wireless mesh network to the Autonomy Wall Switch, Touch Screen and/or Gateway, where readings are aggregated, stored and made accessible to the user. The power reading and a reason code (motion, daylight, personal override) is transmitted when there is a change in light level to provide insight into historic energy usage patterns.

AUTONOMY SENSOR DATASHEET

EMERGENCY LIGHTING

OVERVIEW

The Emergency Autonomy Sensor is a UL 924 certified device that sets the light level of the emergency luminaire to 100% during the loss of normal power. With the Emergency Autonomy Sensor, the emergency luminaire does not require an in-fixture transfer relay or a connection to the normal power circuit to sense the loss of normal power.

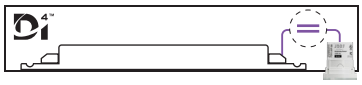

Normal power luminaire.

Luminaire powered by a normal circuit and equiped with a D4i certified LED driver and an Autonomy Sensor.

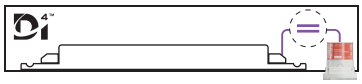

Emergency power luminaire.

Luminaire powered by an emergency circuit and equiped with a D4i certified LED driver and an Emergency Autonomy Sensor.

SYSTEM ARCHITECTURE

The Emergency Autonomy Sensor eliminates the need to connect the normal power circuit to the emergency luminaire to sense the loss of normal power. It works with a distributed backup (emergency luminaires contains a battery), or a centralized backup system (transfer switch routes power to the emergency circuit).

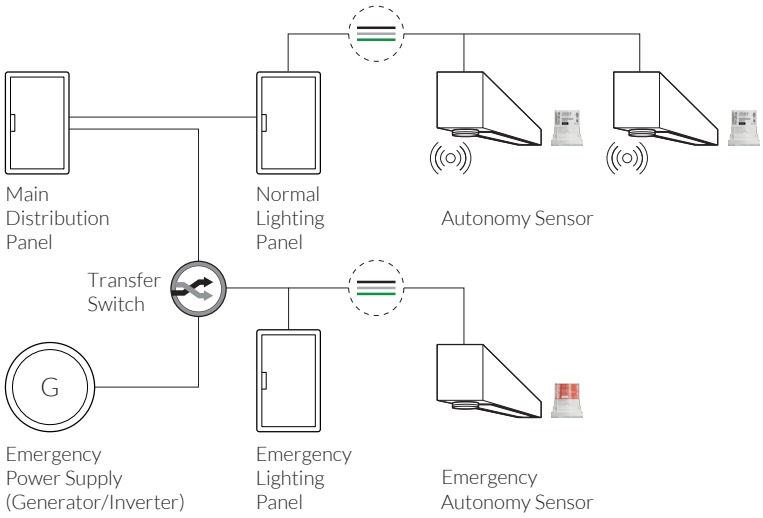

JDRF ELECTROMAG

AUTONOMY SENSOR DATASHEET

EMERGENCY LIGHTING

EMERGENCY OPERATION

The Emergency Autonomy Sensor automatically pairs with and detects the power beacon issued by co-located Autonomy Sensors.

1. While normal power is available, Autonomy Sensors connected to the normal power supply issue a power beacon at a regular interval.
2. When normal power is lost, the Emergency Autonomy Sensor detects the loss of the power beacon and enters the emergency mode of operation.
3. The Emergency Autonomy Sensor enters the emergency mode of operation in less than 10 seconds of normal power loss.
4. While in emergency mode, the Emergency Autonomy Sensor sets the light level of the emergency luminaire to 100% and ignores all system and user generated requests to change the light level.
5. When normal power is returned, the Emergency Autonomy Sensor detects power beacon, exits emergency mode, and resumes normal operation.
6. The light level of the emergency luminaire during the loss of normal power cannot be modified.

EMERGENCY TEST MODE

Use the Autonomy Lighting Mobile Application to set the Emergency Autonomy Sensor to emergency test mode. The mobile application can be used to document and publish the results of an emergency test to demonstrate compliance with applicable emergency lighting regulations. See the Autonomy Lighting Mobile Application datasheet for more information on how to run and view the results of the emergency test.

AUTONOMY SENSOR DATASHEET

DIMENSIONS

AUTONOMY
SENSOR
(ALL MODELS)

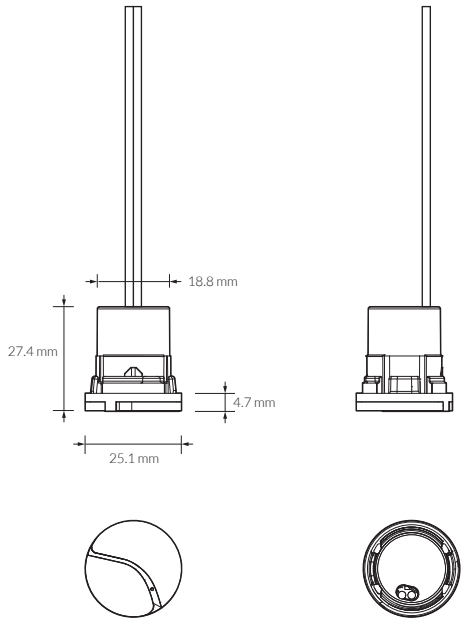

MOUNTING
HOLE

Luminaire hole dimension: 0.885” +/- 0.01” (22.5 mm +/- 0.25 mm)
Sheet metal thickness: 0.02 – 0.12” (0.5 - 3.0 mm)

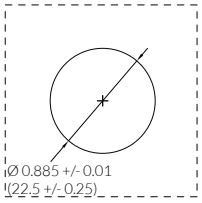

Subject to change without notice

AUTONOMY SENSOR DATASHEET

LUMINAIRE INSTALL

LUMINAIRE FITTING

The Luminaire Fitting allows the Autonomy Sensor to be installed in a 1/2" trade-size knock-out.

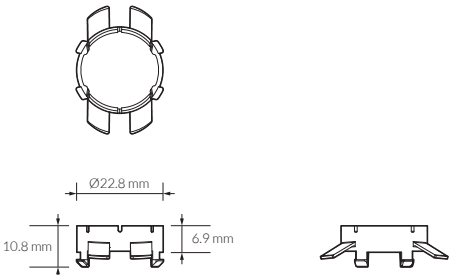

INSTALLING THE LUMINAIRE FITTING

Installation Steps

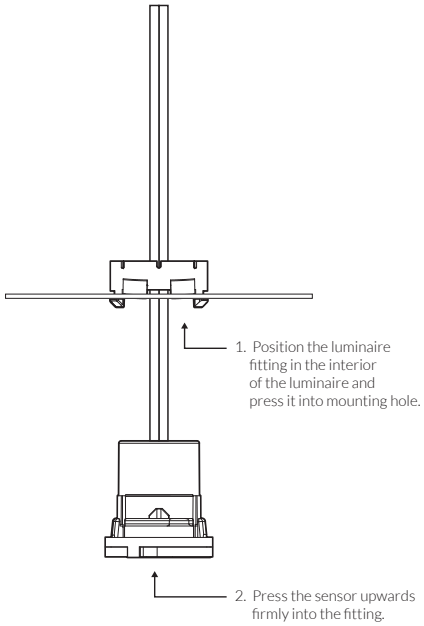

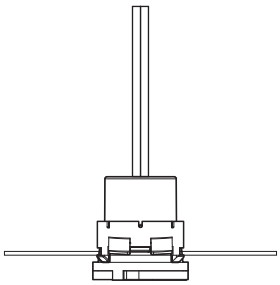

AUTONOMY SENSOR DATASHEET

LUMINAIRE INSTALL

INSTALLING THE LUMINAIRE FITTING

Follow the instructions below to install the Luminaire Fitting correctly.

1. Remove the Autonomy Sensor and Luminaire Fitting from the packaging.
2. Disengage the Luminaire Fitting by applying gentle pressure while sliding it towards the Autonomy Sensor wires.
3. Inspect the mounting hole, debur any sharp edges and remove any oils or debris.
4. Fasten the Luminaire Fitting to the luminaire by pushing the outer retention clips through the mounting hole.
5. The support flanges should rest firmly on the inner surface of the luminaire and the bottom retention clips should grip the outer surface of the luminaire. The Luminaire Fitting can be placed in rotational position.
6. The body of the Luminaire Fitting is located in the interior of the Luminaire.
7. Use the guides on the Luminaire fitting to align the Autonomy Sensor correctly. It will snap into the Luminaire Fitting with a minimal application of force.
8. The Autonomy Sensor can removed with a small clock-wise rotation.
9. Do not mount on curved surfaces. The front face of the Autonomy Sensor must have an unobstructed view of the detection area.
10. Autonomy Sensor front face should be parallel to the floor in the final field installation.

Completed Installation View

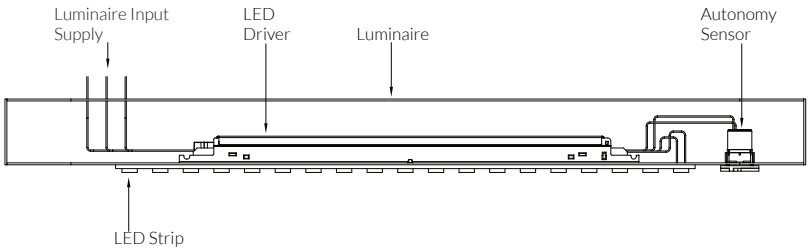

AUTONOMY SENSOR DATASHEET

LUMINAIRE INSTALL

INSTALLING THE LUMINAIRE FITTING

Vertical depth clearance: 27 mm / 1.06", including the clearance required for the wires.

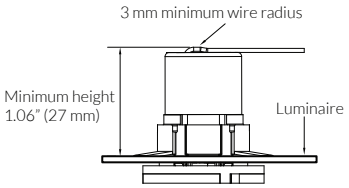

LUMINAIRE TESTING

While the total run-time of the Autonomy Sensor is less than or equal to 24 hours, when power is applied to the luminaire and if the result of self-check is pass, the sensor ramp the light level up/down for 10 seconds.

LUMINAIRE PACKAGING

Luminaire manufacturer to provide rigid packaging that prevents damage to the Autonomy Sensor during shipping. The anti-scratch film should only be removed after the luminaire has been installed on-site.

AUTONOMY SENSOR DATASHEET

FIELD INSTALL

CONDUIT FITTING

The Conduit Fitting allows the Autonomy Sensor to be installed in 1/2", 3/4", or 1" trade-size thin-wall rigid conduit without any tools.

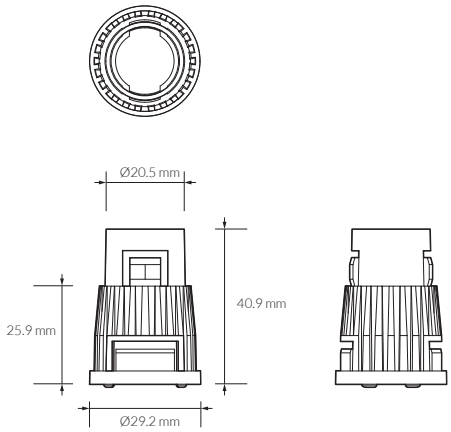

INSTALLING THE CONDUIT FITTING

Installation Steps

1/2" Trade Size
Thin-Wall Rigid Steel Conduit 7126K1

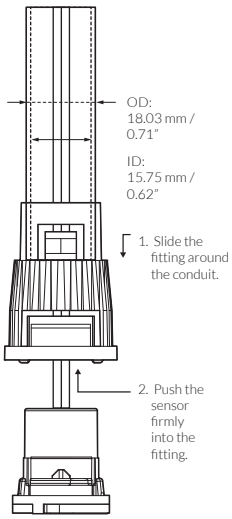

3/4" Trade Size
Thin-Wall Rigid Steel Conduit 7126K12

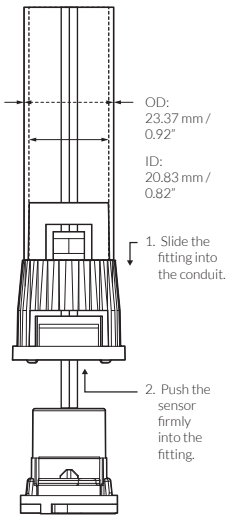

1" Trade Size
Thin-Wall Rigid Steel Conduit 7126K13

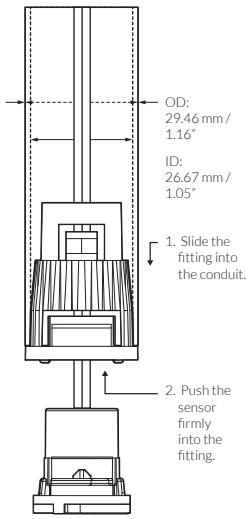

AUTONOMY SENSOR DATASHEET

FIELD INSTALL

INSTALLING THE CONDUIT FITTING

Completed Installation View

1/2" Trade Size
Thin-Wall Rigid
Steel Conduit
7126K1

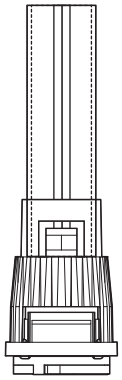

3/4" Trade Size
Thin-Wall Rigid
Steel Conduit
7126K12

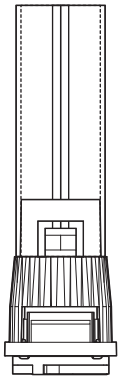

1" Trade Size
Thin-Wall Rigid
Steel Conduit
7126K13

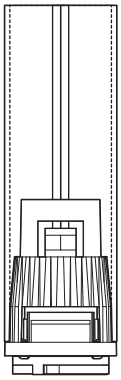

AUTONOMY SENSOR DATASHEET

FIELD INSTALL

CEILING TILE FITTING

The Ceiling Tile Fitting allows the Autonomy Sensor to be installed in the tile of a drop-ceiling without any tools. The serrated edge can be used to cut a mounting hole and the screw thread provides the necessary retention in the ceiling tile. It can also be used for dry-wall mount applications (use hole-saw).

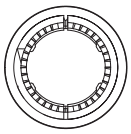

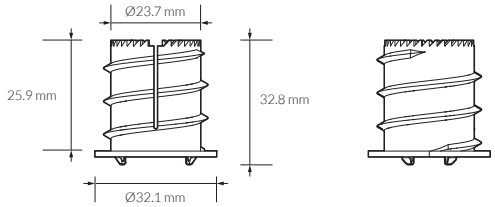

INSTALLING THE CEILING TILE FITTING

Installation Steps

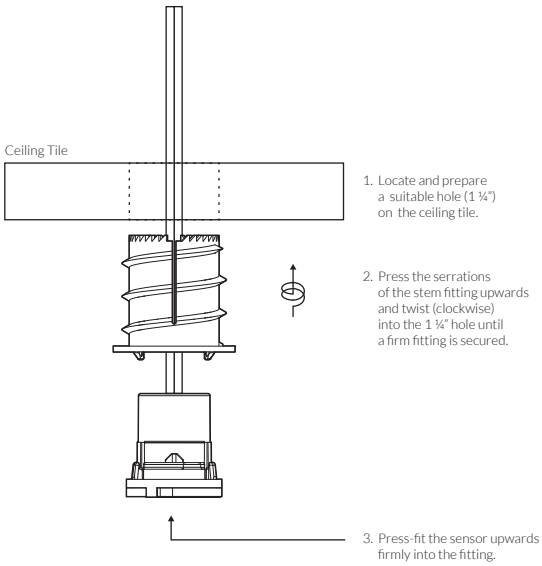

Completed Installation View

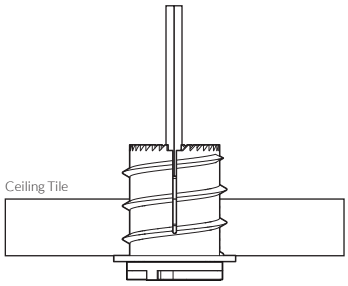

JDRF ELECTROMAG

AUTONOMY SENSOR DATASHEET

FIELD INSTALL

SURFACE MOUNT FITTING

The Surface Mount Fitting allows the Autonomy Sensor to be installed in a 1/2" trade-size knock-out of a junction box.

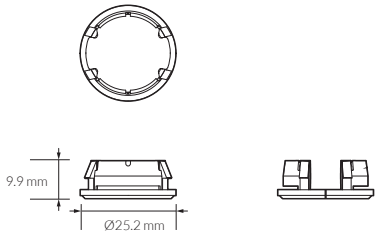

INSTALLING THE SURFACE MOUNT FITTING

Installation Steps

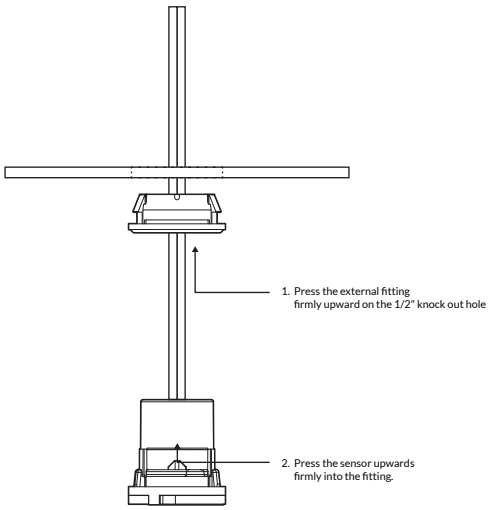

Completed Installation View

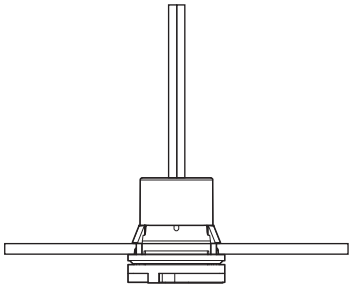

AUTONOMY SENSOR DATASHEET

ELECTRICAL WIRING

Warning: Read and adhere to the electrical specifications listed in the datasheet. The Autonomy Sensor maximum input voltage is 24VDC and should never be connected to line-voltage. The Autonomy Sensor should only be connected to the sensor interface of a D4i compliant LED control gear. Where installed outside of the luminaire, only use a pair of non-twisted, non-shielded, non-polarized plenum (FT6) rated wires with a maximum length of 30.5 m (100 ft).

WIRING TO LED DRIVER IN LUMINAIRE

The luminaire contains a D4i compliant LED driver and Autonomy Sensor. The LED driver provide low-voltage power and hardwired communication to the Autonomy Sensor using the DALI protocol. Connect the Autonomy Sensor wires to the sensor interface of the D4i compliant LED driver, as shown below.

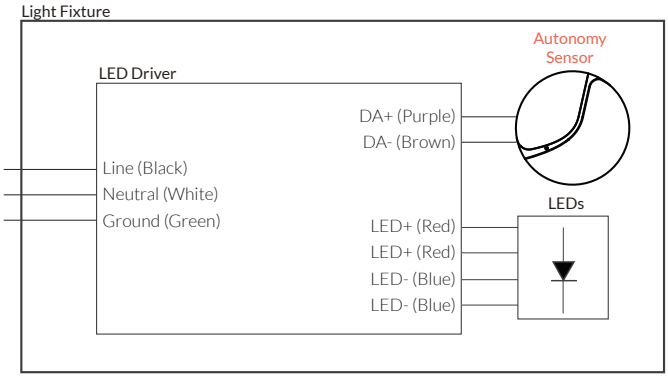

AUTONOMY SENSOR DATASHEET

SPECIFICATIONS

REMOTE INSTALLATION & WIRING

The Autonomy Switchpack connects the Autonomy Sensor to one or more 0-10V LED drivers. Connect the Autonomy Sensor wires to the sensor interface of the Autonomy Switchpack, as shown below.

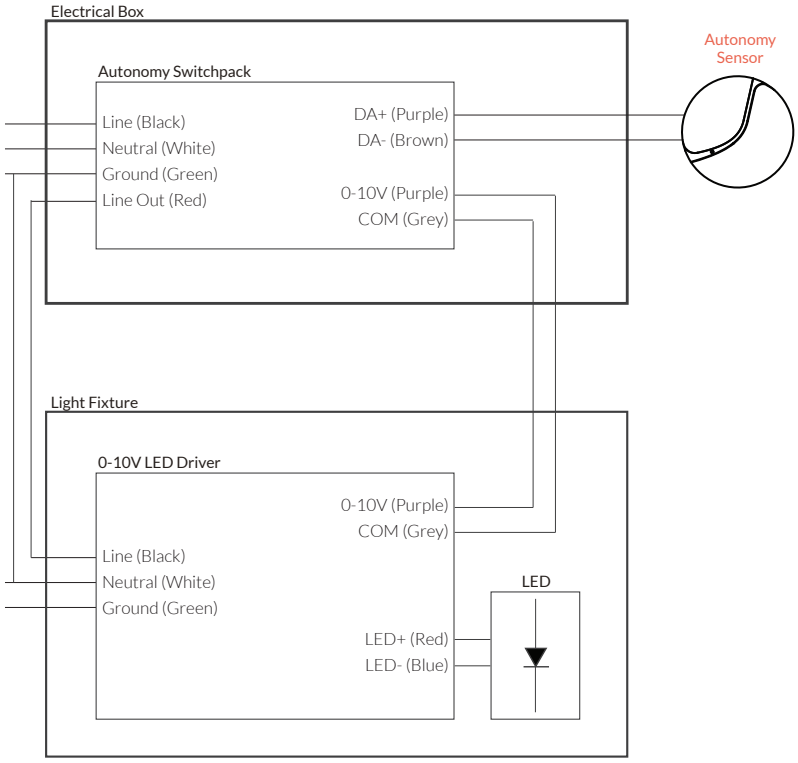

AUTONOMY SENSOR DATASHEET

ORDERING INFO

AUTONOMY SENSORS

Autonomy Sensors are available in black and white and can be purchased in single or 20-packs.

1. AS/ASLB: 9-12 ft/12-20 ft mounting height.
2. B/W: Black/white
3. V01/V31: profile for offices, schools, datacenter, and healthcare/ retail and grocery stores.
4. 1P/20P: single-pack / 20-pack.

ORDERABLE PART NUMBER	DESCRIPTION
JDRF-AS-B-V01-1P	Black, Office (9-12 ft), 1-Pack
JDRF-AS-B-V01-20P	Black, Office (9-12 ft), 20-Pack
JDRF-AS-B-V31-1P	Black, Retail (9-12 ft), 1-Pack
JDRF-AS-B-V31-20P	Black, Retail (9-12 ft), 20-Pack
JDRF-ASLB-B-V01-1P	Black, Office (12-20 ft), 1-Pack
JDRF-ASLB-B-V01-20P	Black, Office (12-20 ft), 20-Pack
JDRF-ASLB-B-V31-1P	Black Retail (12-20 ft), 1-Pack
JDRF-ASLB-B-V31-20P	Black, Retail (12-20 ft), 20-Pack
JDRF-ASLB-W-V01-1P	White, Office (12-20 ft), 1-Pack
JDRF-ASLB-W-V01-20P	White, Office (12-20 ft), 20-Pack
JDRF-ASLB-W-V31-1P	White, Retail (12-20 ft), 1-Pack
JDRF-ASLB-W-V31-20P	White, Retail (12-20 ft), 20-Pack
JDRF-AS-W-V01-1P	White, Office (9-12 ft), 1-Pack
JDRF-AS-W-V01-20P	White, Office (9-12 ft), 20-Pack
JDRF-AS-W-V31-1P	White, Retail (9-12 ft), 1-Pack
JDRF-AS-W-V31-20P	White, Retail (9-12 ft), 20-Pack

JDRF ELECTROMAG

AUTONOMY SENSOR DATASHEET

ORDERING INFO

EMERGENCY UL 924 AUTONOMY SENSORS

Emergency UL 924Autonomy Sensors are available in black and white and can be purchased in single or 20-packs.

1. EAS/EASLB: 9-12 ft/12-20 ft mounting height.
2. B/W: Black/white
3. V01/V31: profile for offices, schools, datacenter, and healthcare/ retail and grocery stores.
4. 1P/20P: single-pack / 20-pack.

ORDERABLE PART NUMBER	DESCRIPTION
JDRF-EAS-B-V01-1P	Black, Office (9-12 ft), 1-Pack
JDRF-EAS-B-V01-20P	Black, Office (9-12 ft), 20-Pack
JDRF-EAS-B-V31-1P	Black, Retail (9-12 ft), 1-Pack
JDRF-EAS-B-V31-20P	Black, Retail (9-12 ft), 20-Pack
JDRF-EASLB-B-V01-1P	Black, Office (12-20 ft), 1-Pack
JDRF-EASLB-B-V01-20P	Black, Office (12-20 ft), 20-Pack
JDRF-EASLB-B-V31-1P	Black Retail (12-20 ft), 1-Pack
JDRF-EASLB-B-V31-20P	Black, Retail (12-20 ft), 20-Pack
JDRF-EASLB-W-V01-1P	White, Office (12-20 ft), 1-Pack
JDRF-EASLB-W-V01-20P	White, Office (12-20 ft), 20-Pack
JDRF-EASLB-W-V31-1P	White, Retail (12-20 ft), 1-Pack
JDRF-EASLB-W-V31-20P	White, Retail (12-20 ft), 20-Pack
JDRF-EAS-W-V01-1P	White, Office (9-12 ft), 1-Pack
JDRF-EAS-W-V01-20P	White, Office (9-12 ft), 20-Pack
JDRF-EAS-W-V31-1P	White, Retail (9-12 ft), 1-Pack
JDRF-EAS-W-V31-20P	White, Retail (9-12 ft), 20-Pack

JDRF ELECTROMAG

AUTONOMY SENSOR DATASHEET

ORDERING INFO

MOUNTING ACCESSORIES

Mounting accessories allow for a variety of installation options.

ORDERABLE PART NUMBER	DESCRIPTION
JDRF-AS-CF-B	Ceiling Tile Mount, Black, 5-Pack
JDRF-AS-CF-W	Ceiling Tile Mount, White, 5-Pack
JDRF-AS-EF-B	External Fitting, Black, 5-Pack
JDRF-AS-EF-W	External Fitting, White, 5-Pack
JDRF-AS-LF-B	Luminaire Fitting, Black, 5-Pack
JDRF-AS-LF-W	Luminaire Fitting, White, 5-Pack
JDRF-AS-SF-B	Conduit Fitting, Black, 5-Pack
JDRF-AS-SF-W	Conduit Fitting, White, 5-Pack

JDRF ELECTROMAG

AUTONOMY SENSOR DATASHEET

ISED & FCC

ISED GENERAL STATEMENTS

ISED Non-Interference Disclaimer

This device contains licensed transmitter(s)/receiver(s) that comply with Innovation, Science and Economic Development Canada's licensed RSS(s). Operation is subject to the following two conditions:
(1) This device may not cause interference.
(2) This device must accept any interference, including interference that may cause undesired operation of the device.
This device complies with the Canadian ICES-003 Class A specifications. CAN ICES-003(A) / NMB-003 (A).

L'émetteur/récepteur autorisée contenu dans le présent appareil est conforme aux CNR d'Innovation, Sciences et Développement économique Canada applicables aux appareils radio autorisée. L'exploitation est autorisée aux deux conditions suivantes :
(1) L'appareil ne doit pas produire de brouillage;
(2) L'appareil doit accepter tout brouillage radioélectrique subi, même si le brouillage est susceptible d'en compromettre le fonctionnement.
Cet appareil numérique de la classe A est conforme à la norme NMB-003 du Canada.

ISED RF Exposure Statement

This equipment complies with ISED RSS-102 radiation exposure limits set forth for an uncontrolled environment. This equipment should be installed and operated with minimum distance 20 cm (7.9 inches) between the radiator and any part of your body. This transmitter must not be co-located or operating in conjunction with any other antenna or transmitter.

Cet équipement est conforme aux limites d'exposition aux radiations ISED CNR-102 établies pour un environnement non contrôlé. Une distance de séparation d'au moins 20 cm doivent être maintenue entre l'antenne de cet appareil et toutes les personnes. Lanceurs ou ne peuvent pas coexister cette antenne ou capteurs avec d'autres.

ISED/FCC RF Exposure Statement

This equipment complies with FCC and ISED RSS-102 radiation exposure limits set forth for an uncontrolled environment. This transmitter must not be co-located or operating in conjunction with any other antenna or transmitter. In order to avoid the possibility of exceeding the FCC and ISED RSS-102 radio frequency exposure limits, this equipment should be installed and operated with minimum distance 20 cm (7.9 inches) between the antenna and your body during normal operation. Users must follow the specific operating instructions for satisfying RF exposure compliance.

Cet équipement est conforme aux limites d'exposition aux rayonnements FCC et ISED CNR-102 établies pour un environnement non contrôlé. Cet émetteur ne doit pas être installé ou utilisé en conjonction avec une autre antenne ou un autre émetteur. Afin d'éviter la possibilité de dépasser les limites d'exposition aux radiofréquences FCC et ISED, cet équipement doit être installé et utilisé avec une distance minimale de 20 cm (7.9 pouces) entre l'antenne et votre corps pendant le fonctionnement normal. Les utilisateurs doivent suivre les instructions spécifiques d'utilisation pour respecter la conformité à l'exposition aux RF.

JDRF ELECTROMAG

AUTONOMY SENSOR DATASHEET

ISED & FCC

FCC STATEMENTS FOR CLASS A DIGITAL DEVICE

FCC Compliance Statement

This equipment has been tested and found to comply with the limits for a Class A digital device, pursuant to part 15 of the FCC Rules. These limits are designed to provide reasonable protection against harmful interference when the equipment is operated in a commercial environment. This equipment generates, uses, and can radiate radio frequency energy and, if not installed and used in accordance with the instruction manual, may cause harmful interference to radio communications. Operation of this equipment in a residential area is likely to cause harmful interference in which case the user will be required to correct the interference at his own expense.
This device complies with Part 15 of the FCC Rules. Operation is subject to the following two conditions:
(1) this device may not cause harmful interference, and
(2) this device must accept any interference received, including interference that may cause undesired operation. Please note that changes or modifications not expressly approved by the party responsible for compliance could void the user's authority to operate the equipment.
Changes or modifications not expressly approved by the party responsible for compliance could void the user's authority to operate the equipment.

FCC RF Exposure Statement

This equipment complies with FCC radiation exposure limits set forth for an uncontrolled environment. This transmitter must not be co-located or operating in conjunction with any other antenna or transmitter. In order to avoid the possibility of exceeding the FCC radio frequency exposure limits, this equipment should be installed and operated with minimum distance 20 cm (7.9 inches) between the antenna and your body during normal operation. Users must follow the specific operating instructions for satisfying RF exposure compliance.

ISED/FCC RF Exposure statement

This equipment complies with FCC and ISED RSS-102 radiation exposure limits set forth for an uncontrolled environment. This transmitter must not be co-located or operating in conjunction with any other antenna or transmitter. In order to avoid the possibility of exceeding the FCC and ISED RSS-102 radio frequency exposure limits, this equipment should be installed and operated with minimum distance 20 cm (7.9 inches) between the antenna and your body during normal operation. Users must follow the specific operating instructions for satisfying RF exposure compliance.

Cet équipement est conforme aux limites d'exposition aux rayonnements FCC et ISED CNR-102 établies pour un environnement non contrôlé. Cet émetteur ne doit pas être installé ou utilisé en conjonction avec une autre antenne ou un autre émetteur. Afin d'éviter la possibilité de dépasser les limites d'exposition aux radiofréquences FCC et ISED, cet équipement doit être installé et utilisé avec une distance minimale de 20 cm (7.9 pouces) entre l'antenne et votre corps pendant le fonctionnement normal. Les utilisateurs doivent suivre les instructions spécifiques d'utilisation pour respecter la conformité à l'exposition aux RF.