bopmen

STAR 10

DISCO SPARKLING WIRELESS
KARAOKE MICROPHONE

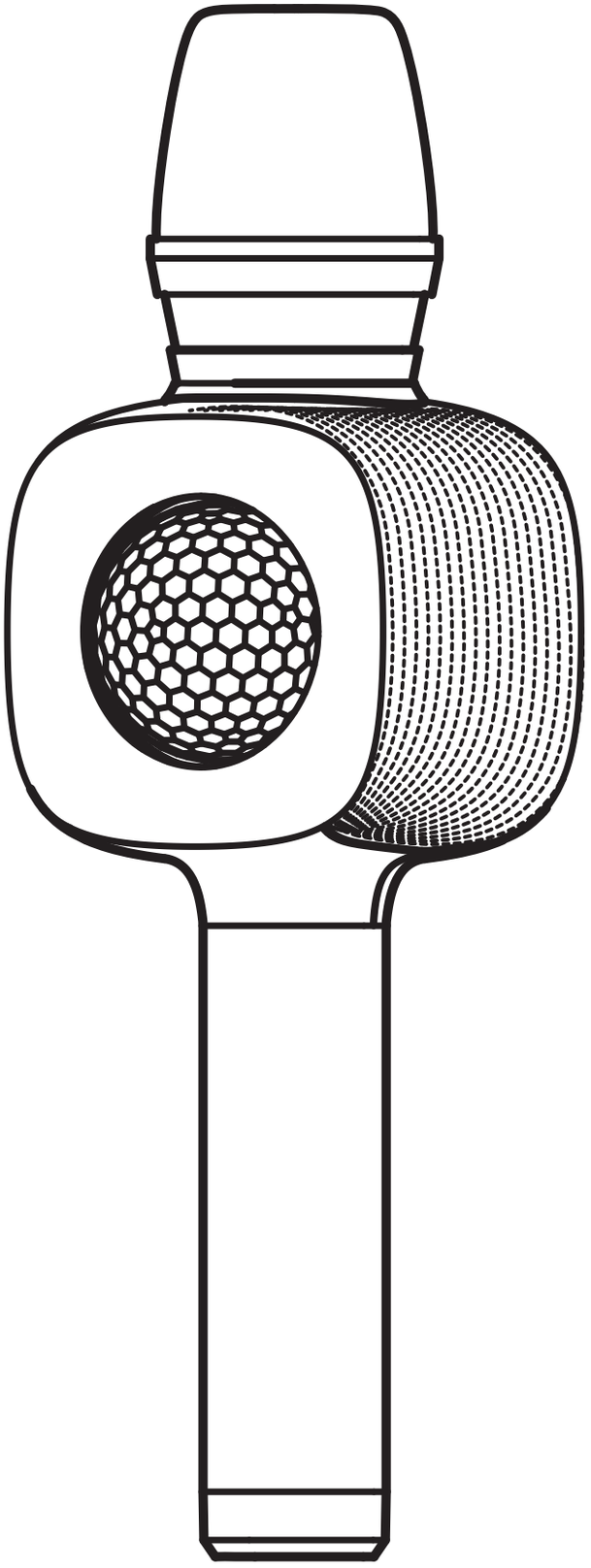

User Manual

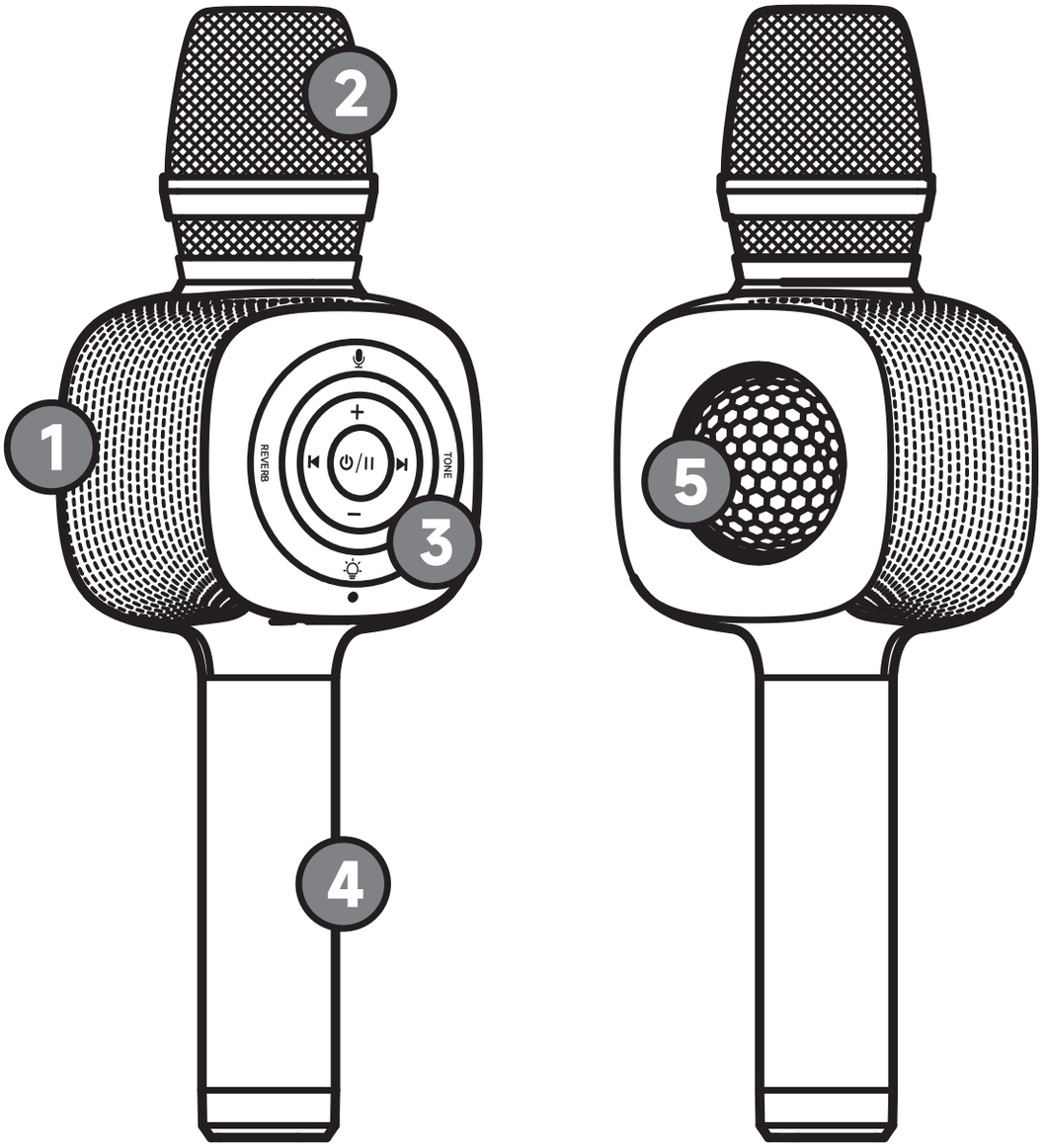

1. Speaker (Left & Right side)
2. Microphone
3. Control panel
4. Handle (Metal)
5. Voice-control disco light

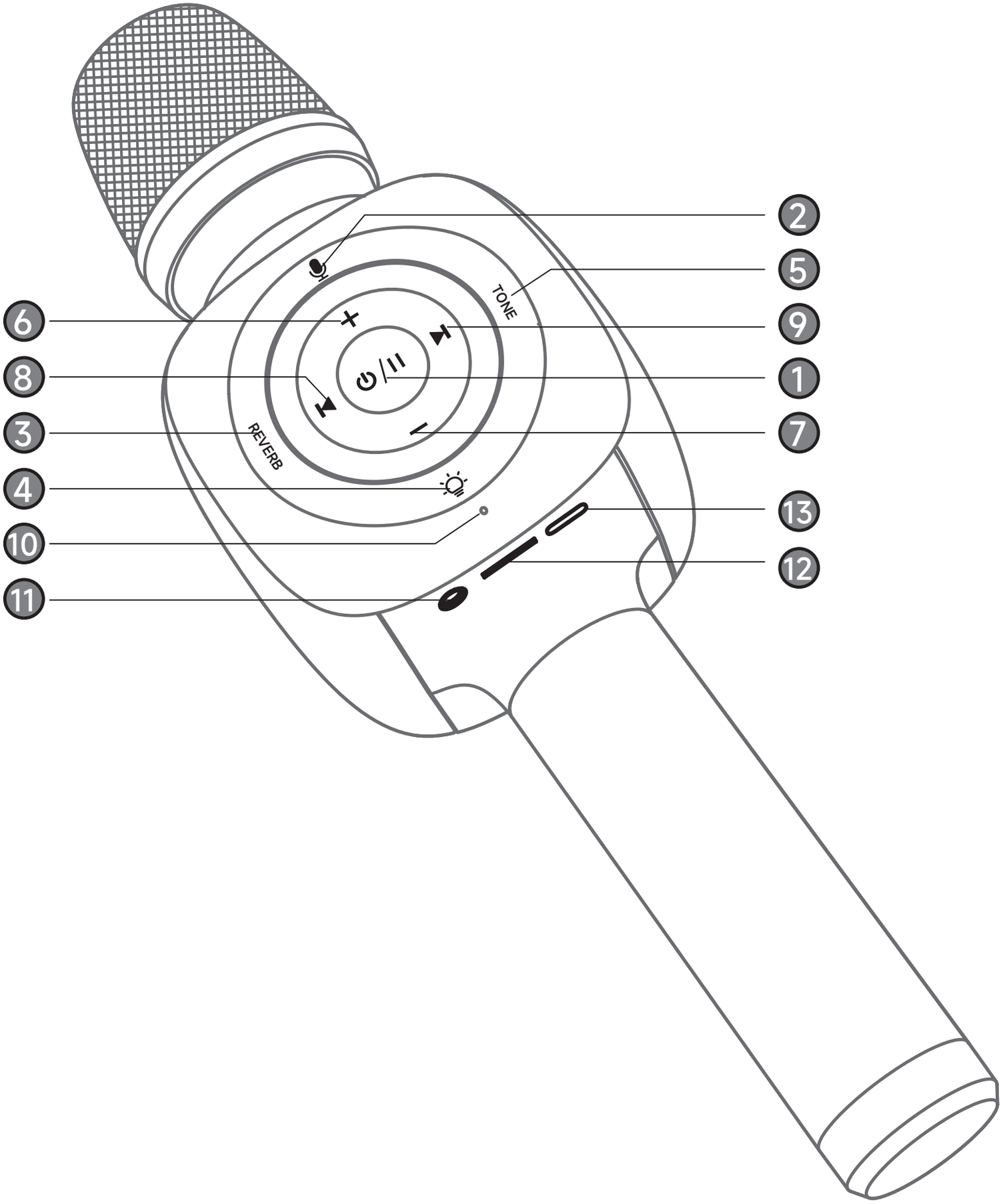
TONE
REVERB
1
2
3
4
5
6
7
8
9
10
11
12
13

Operating Guide

To ensure better sound effect in Bluetooth mode, please click the Bluetooth settings on the device and synchronize the microphone volume with the device volume.

❶ ⏻/II

On/Off Button

Long press this button for 3 seconds to turn on/off the karaoke microphone.

Play/Pause Button

When the microphone is on, press the button to play or pause.

❷ 🎤

Microphone Volume Control Button

When the karaoke microphone is turned on, press the button and the volume loops in maximum-minimum-off modes by default.

Accompaniment Mode On/Off Button

Long press the button for 2 seconds when the karaoke microphone is turned on under TF card mode.

❸ REVERB

Reverberation On/Off Button

Switched on by default when the karaoke microphone is turned on; turn on/off by pressing this button.

Bluetooth & TF Card Mode Button

Bluetooth mode is turned on by default when the karaoke microphone is switched on, and automatically switches to TF card mode after a TF card is inserted. Once a TF card is inserted, long press this button for 2 seconds to switch to Bluetooth mode.

Operating Guide

④

Disco Light Control Loop

Default maximum brightness when the karaoke microphone is turned on, press this button to adjust the 3 brightness modes or turn it off.

Dual Pairing Button

Long press this button for 2 seconds to connect or disconnect in Bluetooth mode.

Note: There will be a prompt tone“LINK CONNECTED”once dual pairing is completed. Bluetooth pairing selection needs to be done again on the cellphone/device and choose either of the two options.

⑤ TONE

Voice Change Button

The original voice mode is turned on by default. Press this button to switch from male to female, female to male, animated and monster voice modes.

⑥ +

Volume Up Button

The default volume is the maximum level when the karaoke microphone is turned on. There are 8 volume levels, press this button to adjust the volume. A beep will sound when the maximum volume limit is reached.

⑦ —

Volume Down Button

Press to adjust the volume level. When it reaches the minimum volume level, press again and a beep will sound.

Operating Guide

8

Previous Song: Press the Prev Song button

9

Next Song: Press the Next Song button

10

Indicator

- The indicator flashes in light blue when the karaoke microphone is turned on and set on Bluetooth pairing mode, and the light is always on once pairing has been completed.
- It flashes in red light when battery is low and the red light is always on during charging.
- The red light turns off when the microphone is fully charged.
- The blue light is always on in TF card mode.

11

3.5mm Earphone Jack / Built-in Reset Button

When the karaoke microphone crashes, insert a sharp object into the hole to reset.

12

TF Card Slot

13

USB-C Charging Port

Specifications

Bluetooth: 5.2

Rated Power: 5 W

Microphone: Supercardioid Dynamic

Microphone Sensitivity: -52 dB

Microphone Maximum Sound Pressure: 115 dB

Speaker Frequency Response: 20 Hz - 20 kHz

Wireless Signal Distance: 10 m

Battery Capacity: 1800 mAh

Battery Life: 4-5 hours

Charging Time: 2-3 hours

Charging Power: DC 5 V 1 A

Dimensions: 279*86*97 mm

Package Contents

Microphone speaker *1

50cm USB C-A cable *1

User manual *1

FCC WARNING

This device complies with part 15 of the FCC Rules. Operation is subject to the following two conditions: (1) this device may not cause harmful interference, and (2) this device must accept any interference received, including interference that may cause undesired operation.

Any changes or modifications not expressly approved by the party responsible for compliance could void the user's authority to operate the equipment.

NOTE: This equipment has been tested and found to comply with the limits for a Class B digital device, pursuant to Part 15 of the FCC Rules. These limits are designed to provide reasonable protection against harmful interference in a residential installation. This equipment generates, uses and can radiate radio frequency energy and, if not installed and used in accordance with the instructions, may cause harmful interference to radio communications. However, there is no guarantee that interference will not occur in a particular installation.

If this equipment does cause harmful interference to radio or television reception, which can be determined by turning the equipment off and on, the user is encouraged to try to correct the interference by one or more of the following measures:

-- Reorient or relocate the receiving antenna.

-- Increase the separation between the equipment and receiver.

-- Connect the equipment into an outlet on a circuit different from that to which the receiver is connected.

-- Consult the dealer or an experienced radio/TV technician for help. The device has been evaluated to meet general RF exposure statement.

The device can be used in portable exposure condition without restriction

Limited Warranty / Eingeschränkte Garantie / 保証書

Garantie limitée / Garantía limitada / Servizio di Garanzia

Our friendly customer service team are ready and waiting to help. Here is how we can connect:

Unser freundliches Kundenservice-Team ist bereit, Ihnen zu bedienen. So können Sie uns kontaktieren:

私たちのカスタマーサービスチームはいつでもお手伝いします。連絡先は次のとおり：

Notre gentil service client est toujours à votre écoute. Vous pouvez nous contacter par une des manières suivantes:

Nuestro amable equipo de atención al cliente está listo y esperando para ayudarle:

Il nostro team post-vendita sarà pronto a servirsi in qualsiasi momento, le seguenti sono le nostre informazioni di contatto:

http://www.bopmen.com

info@bopmen.com

UK REP

UK REP: JunBright Ltd
Add.: 51 Chalton Street London,
England, NW1 1HY
Tel.: +4407561533299
E-Mail: yldyx112@ outlook. com

US Agent

TRANS-PAC CHINA LLC
Add.: 3715 S 182nd Street, C120
Seatac, WA 98188-9993, US
Tel.: +1 (818) 818-0538
Email: lisaleeinchina@gmail.com

EC REP

C&E Connection E-Commerce (DE) GmbH
Add.: Zum Linnegraben 20, 65933, Frankfurt am Main, Germany
E-Mail: info@ce-connection.de

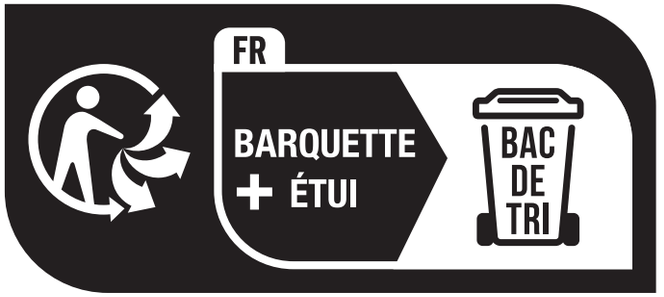

FCC ID: 2A25A-STAR10
Made in China