| | | | | |
|---|---|---|---|---|
| **Prüfbericht-Nr.:** *Test report no.:* | CN25NV17 001 | **Auftrags-Nr.:** *Order no.:* | 48283575 | Seite 1 von 27 *Page 1 of 27* |
| **Kunden-Referenz-Nr.:** *Client reference no.:* | N/A | **Auftragsdatum:** *Order date:* | 2025-10-28 | |
| **Auftraggeber:** *Client:* | Dot Origin Ltd<br>Unit 7 Coopers Place, Combe Lane, Wormley, Godalming, GU8 5SZ, UK | | | |
| **Prüfgegenstand:** *Test item:* | VTAP50L | | | |
| **Bezeichnung / Typ-Nr.:** *Identification / Type no.:* | VTAP50L | | | |
| **Auftrags-Inhalt:** *Order content:* | FCC Part 15C Test report (NFC) | | | |
| **Prüfgrundlage:** *Test specification:* | FCC 47CFR Part 15: Subpart C Section 15.225 | | | |
| **Wareneingangsdatum:** *Date of sample receipt:* | 2025-11-12 | | | |
| **Prüfmuster-Nr.:** *Test sample no:* | A004137441-001<br>A004137441-013 | | | |
| **Prüfzeitraum:** *Testing period:* | 2025-12-09 - 2025-12-16 | | | |
| **Ort der Prüfung:** *Place of testing:* | TÜV Rheinland Taiwan Ltd.<br>New Taipei Branch | | | |
| **Prüflaboratorium:** *Testing laboratory:* | TÜV Rheinland Taiwan Ltd.<br>Taipei Testing Laboratories | | | |
| **Prüfergebnis*:** *Test result*:* | Pass | | | |

| | | | |
|---|---|---|---|
| **zusammengestellt von:** *compiled by:* | | **genehmigt von:** authorized by: | |
| **Datum:** *Date:* 2025-12-22 | Anderson Chiu | **Ausstellungsdatum:** *Issue date:* 2025-12-22 | Brenda Chen |
| **Stellung** / *Position:* | Senior Project Manager | **Stellung** / *Position:* | Senior Project Manager |

**Sonstiges** / *Other:*

**Zustand des Prüfgegenstandes bei Anlieferung:** Prüfmuster vollständig und unbeschädigt
*Condition of the test item at delivery:* *Test item complete and undamaged*

| | | | | | |
|---|---|---|---|---|---|
| * Legende: | 1 = sehr gut | 2 = gut | 3 = befriedigend | 4 = ausreichend | 5 = mangelhaft |
| | P(ass) = entspricht o.g. Prüfgrundlage(n) | | F(ail) = entspricht nicht o.g. Prüfgrundlage(n) | N/A = nicht anwendbar | N/T = nicht getestet |
| ** Legend:* | *1 = very good* | *2 = good* | *3 = satisfactory* | *4 = sufficient* | *5 = poor* |
| | *P(ass) = passed a.m. test specification(s)* | | *F(ail) = failed a.m. test specification(s)* | *N/A = not applicable* | *N/T = not tested* |

**Dieser Prüfbericht bezieht sich nur auf das o.g. Prüfmuster und darf ohne Genehmigung der Prüfstelle nicht auszugsweise vervielfältigt werden. Dieser Bericht berechtigt nicht zur Verwendung eines Prüfzeichens.**
*This test report only relates to the a. m. test sample. Without permission of the test center this test report is not permitted to be duplicated in extracts. This test report does not entitle to carry any test mark.*

## Anmerkungen
*Remarks*

| | |
|---|---|
| **1** | Alle eingesetzten Prüfmittel waren zum angegebenen Prüfzeitraum gemäß eines festgelegten Kalibrierungsprogramms unseres Prüfhauses kalibriert. Sie entsprechen den in den Prüfprogrammen hinterlegten Anforderungen. Die Rückverfolgbarkeit der eingesetzten Prüfmittel ist durch die Einhaltung der Regelungen unseres Managementsystems gegeben.<br>Detaillierte Informationen bezüglich Prüfkonditionen, Prüfequipment und Messunsicherheiten sind im Prüflabor vorhanden und können auf Wunsch bereitgestellt werden.<br><br>*The equipment used during the specified testing period was calibrated according to our test laboratory calibration program. The equipment fulfils the requirements included in the relevant standards. The traceability of the test equipment used is ensured by compliance with the regulations of our management system.*<br>*Detailed information regarding test conditions, equipment and measurement uncertainty is available in the test laboratory and could be provided on request.* |
| **2** | Wie vertraglich vereinbart, wurde dieses Dokument nur digital unterzeichnet. Der TÜV Rheinland hat nicht überprüft, welche rechtlichen oder sonstigen diesbezüglichen Anforderungen für dieses Dokument gelten. Diese Überprüfung liegt in der Verantwortung des Benutzers dieses Dokuments. Auf Verlangen des Kunden kann der TÜV Rheinland die Gültigkeit der digitalen Signatur durch ein gesondertes Dokument bestätigen. Diese Anfrage ist an unseren Vertrieb zu richten. Eine Umweltgebühr für einen solchen zusätzlichen Service wird erhoben. Informationen zur Verifizierung der Authentizität unserer Dokumente erhalten Sie auf folgender Webseite: go.tuv.com/digital-signature<br><br>*As contractually agreed, this document has been signed digitally only. TUV Rheinland has not verified and unable to verify which legal or other pertaining requirements are applicable for this document. Such verification is within the responsibility of the user of this document. Upon request by its client, TUV Rheinland can confirm the validity of the digital signature by a separate document. Such request shall be addressed to our Sales department. An environmental fee for such additional service will be charged. For information on verifying the authenticity of our documents, please visit the following website: go.tuv.com/digital-signature* |
| **3** | Prüfklausel mit der Note * wurden an qualifizierte Unterauftragnehmer vergeben und sind unter der jeweiligen Prüfklausel des Berichts beschrieben.<br>Abweichungen von Prüfspezifikation(en) oder Kundenanforderungen sind in der jeweiligen Prüfklausel im Bericht aufgeführt.<br><br>*Test clauses with remark of * are subcontracted to qualified subcontractors and descripted under the respective test clause in the report.*<br>*Deviations of testing specification(s) or customer requirements are listed in specific test clause in the report.* |
| **4** | Die Entscheidungsregel für Konformitätserklärungen basierend auf numerischen Messergebnisen in diesem Prüfbericht basiert auf der "Null-Grenzwert-Regel" und der "Einfachen Akzeptanz" gemäß ILAC G8:2019 und IEC Guide 115:2023, es sei denn, in der auf Seite 1 dieses Berichts genannten angewandten Norm ist etwas anderes festgelegt oder vom Kunden gewünscht. Dies bedeutet, dass die Messunsicherheit nicht berücksichtigt wird und daher auch nicht im Prüfbericht angegeben wird. Zu weiteren Informationen bezueglich des Risikos durch diese Entscheidungsregel siehe ILAC G8:2019.<br><br>*The decision rule for statements of conformity, based on numerical measurement results, in this test report is based on the “Zero Guard Band Rule” and “Simple Acceptance” in accordance with ILAC G8:2019 and IEC Guide 115:2023, unless otherwise specified in the applied standard mentioned on Page 1 of this report or requested by the customer. This means that measurement uncertainty is not taken in account and hence also not declared in the test report. For additional information to the resulting risk based of this decision rule please refer to ILAC G8:2019.* |

# TEST SUMMARY

| Report Section | FCC Clause | Test Item | Result |
|---|---|---|---|
| 5.1.1 | 15.203 | Antenna Requirement | Pass |
| 5.1.2 | 15.225 (a)(b)(c) | Field Strength of Fundamental Emissions | Pass |
| 5.1.3 | 15.225 (d) | Radiated Spurious Emissions | Pass |
| 5.1.4 | 15.225 (e) | Frequency Stability | Pass |
| 5.1.5 | 15.215 (c) | 20 dB Bandwidth | Pass |
| 5.1.5 | 2.1049 | 99% Occupied Bandwidth | Pass |
| 5.2.1 | 15.207 | Mains Conducted Emission | Pass |

**Note:** Determining compliance based on the results of the compliance measurement, not taking into account measurement instrumentation uncertainty.

# Contents

**HISTORY OF THIS TEST REPORT** ..... 5

**1. GENERAL REMARKS** ..... 6
**1.1 COMPLEMENTARY MATERIALS** ..... 6
**1.2 DECISION RULE OF CONFORMITY** ..... 6

**2. TEST SITES** ..... 7
**2.1 TEST LABORATORY** ..... 7
**2.2 TEST FACILITY** ..... 7
**2.3 TRACEABILITY** ..... 8
**2.4 CALIBRATION** ..... 8
**2.5 MEASUREMENT UNCERTAINTY** ..... 8

**3. GENERAL PRODUCT INFORMATION** ..... 9
**3.1 PRODUCT FUNCTION AND INTENDED USE** ..... 9
**3.2 SYSTEM DETAILS AND RATINGS** ..... 9
**3.3 NOISE GENERATING AND NOISE SUPPRESSING PARTS** ..... 10
**3.4 SUBMITTED DOCUMENTS** ..... 10

**4. TEST SET-UP AND OPERATION MODES** ..... 11
**4.1 PRINCIPLE OF CONFIGURATION SELECTION** ..... 11
**4.2 TEST OPERATION AND TEST SOFTWARE** ..... 11
**4.3 SPECIAL ACCESSORIES AND AUXILIARY EQUIPMENT** ..... 12
**4.4 TEST SETUP DIAGRAM** ..... 13

**5. TEST RESULTS** ..... 14
**5.1 TRANSMITTER REQUIREMENT & TEST SUITES** ..... 14
*5.1.1 Antenna Requirement* ..... 14
*5.1.2 Field Strength of Fundamental Emissions* ..... 15
*5.1.3 Radiated Spurious Emissions* ..... 18
*5.1.4 Frequency Stability* ..... 22
*5.1.5 20 dB Bandwidth and 99% Occupied Bandwidth* ..... 24

**5.2 MAINS EMISSION** ..... 26
*5.2.1 Mains Conducted Emission* ..... 26

**APPENDIX A - TEST RESULT OF RADIATED EMISSIONS & MAINS CONDUCTED EMISSION**

**APPENDIX SP - PHOTOGRAPHS OF TEST SETUP**

**APPENDIX EP - PHOTOGRAPHS OF EUT**

# HISTORY OF THIS TEST REPORT

| Revision | Description | Date Issued |
|---|---|---|
| R01 | Original Release | 2025-12-22 |

# 1. General Remarks

## 1.1 Complementary Materials

All attachments are integral parts of this test report. This applies especially to the following appendix:
**Appendix A - Test Result of Radiated Emissions & Mains Conducted Emission**
**Appendix SP - Photographs of Test Setup**
**Appendix EP - Photographs of EUT**

### Applied Standard and Test Levels

| Radio |
|---|
| FCC 47CFR Part 15: Subpart C Section 15.225<br>FCC 47CFR Part 2: Subpart J Section 2.1049<br>ANSI C63.10-2020 |

## 1.2 Decision Rule of Conformity

The decision rule of conformity of this test report is following the requirements of the requested standard in the quotation, and agreed among testing laboratory and manufacturer (applicant) to exclude the consideration of Measurement Uncertainty, unless it is required by the specific standard.

# 2. Test Sites

## 2.1 Test Laboratory

TÜV Rheinland Taiwan Ltd. Taipei Testing Laboratories

11F. No.758, Sec. 4, Bade Rd., Songshan Dist.
Taipei City 105
Taiwan (R.O.C.)

## 2.2 Test Facility

TÜV Rheinland Taiwan Ltd. Taipei Testing Laboratories

No.458-18, Sec. 2, Fenliao Rd., Linkou Dist.,
New Taipei City 244
Taiwan (R.O.C.)
FCC Registration No.: 180491
ISED Registration No.: 25563

## 2.3 Traceability

All measurement equipment calibrations are traceable to NML(Taiwan)/NIST(USA) or where calibration is performed outside Taiwan, to equivalent nationally recognized standards organizations.

## 2.4 Calibration

Equipment requiring calibration is calibrated periodically in a suitably accredited Calibration Lab. Additionally all equipment is verified for proper performance on a regular basics using in house standards or comparisons.

## 2.5 Measurement Uncertainty

All measurement uncertainty values are shown with a coverage factor of k=2 to indicate a 95% level of confidence.

### Emission Measurement Uncertainty

| Parameter | Uncertainty |
|---|---|
| Radiated Emission (9 kHz ~ 30 MHz) | ± 1.15 dB |
| Radiated Emission (30 MHz ~ 200 MHz) | ± 1.32 dB |
| Radiated Emission (200 MHz ~ 1 GHz) | ± 1.31 dB |
| Mains Conducted Emission | ± 1.65 dB |

# 3. General Product Information

## 3.1 Product Function and Intended Use

The EUT is a VTAP50L working at 13.56 MHz with NFC function.
For details refer to the User Guide, Data Sheet and Circuit Diagram.

## 3.2 System Details and Ratings

### Basic Information of EUT

| Item | EUT information |
|---|---|
| Kind of Equipment/Test Item | VTAP50L |
| Type Identification | VTAP50L |
| FCC ID | 2A282-VTAP50L |

### Technical Specification of EUT

| Item | EUT information |
|---|---|
| Operating Frequency | 13.56 MHz |
| Operation Voltage | 5 Vdc |
| Modulation | ASK |
| Antenna Information | Refer to 5.1.1 |
| Accessory Device | Refer to 4.3 |

## 3.3 Noise Generating and Noise Suppressing Parts

Refer to the Circuit Diagram.

## 3.4 Submitted Documents

- Circuit Diagram
- Instruction Manual
- Rating Label
- Technical Description

# 4. Test Set-up and Operation Modes

## 4.1 Principle of Configuration Selection

The equipment under test (EUT) was configured to measure its maximum emission level. The test modes were adapted accordingly in reference to the instructions for use.

## 4.2 Test Operation and Test Software

Setup for testing: The EUT has a serial interface which makes it possible to read data from the NFC reader. The NFC reader is permanently on.

| | |
|---|---|
| Test Software | N/A |

The samples were used as follows:
A004137441-001
A004137441-013
Full test was applied on all test modes, but only worst case was shown.

| EUT Configure Mode | Applicable To | | | | Description |
|---|---|---|---|---|---|
| | Radiated Spurious Emissions | Frequency Stability | 20 dB Bandwidth | Mains Conducted Emission | |
| - | √ | √ | √ | √ | - |

Note:
1. The EUT had been pre-tested on the positioned of each 3 axis. The worst case was found when position on **Y-plane**.
2. "-" means no effect.

**Radiated Spurious Emissions**

☒ Pre-Scan full test was applied on all test modes, but only worst case was shown.
☒ Following channel(s) was (were) selected for the final test as listed below.

| EUT Configure Mode | Available Frequency (MHz) | Tested Frequency (MHz) |
|---|---|---|
| - | 13.56 | 13.56 |

**Frequency Stability**

☒ Pre-Scan full test was applied on all test modes, but only worst case was shown.
☒ Following channel(s) was (were) selected for the final test as listed below.

| EUT Configure Mode | Available Frequency (MHz) | Tested Frequency (MHz) |
|---|---|---|
| - | 13.56 | 13.56 |

**20 dB Bandwidth**

☒ Pre-Scan full test was applied on all test modes, but only worst case was shown.
☒ Following channel(s) was (were) selected for the final test as listed below.

| EUT Configure Mode | Available Frequency (MHz) | Tested Frequency (MHz) |
|---|---|---|
| - | 13.56 | 13.56 |

**Mains Conducted Emission**

☒ Pre-Scan full test was applied on all test modes, but only worst case was shown.
☒ Following channel(s) was (were) selected for the final test as listed below.

| EUT Configure Mode | Available Frequency (MHz) | Tested Frequency (MHz) |
|---|---|---|
| - | 13.56 | 13.56 |

**Test Condition**

| Test Item | Ambient Temperature | Relative Humidity | Tested by |
|---|---|---|---|
| Radiated Spurious Emissions | 23.1-25.3 °C | 46-51 % | Andy Chen |
| Frequency Stability | 16.2-16.7 °C | 46-63 % | Nick Hsu |
| 20 dB Bandwidth | 16.2-16.7 °C | 46-63 % | Nick Hsu |
| Mains Conducted Emission | 22.9 °C | 57 % | Chuan Chu |

## 4.3 Special Accessories and Auxiliary Equipment

The product has been tested together with the following additional accessories:

### Accessory of EUT

None.

### Support Unit

| Support Unit | | | | | | | | |
|---|---|---|---|---|---|---|---|---|
| No | Description | Brand | Model | S/N | Shielded | Ferrite Core (Qty) | Length (cm) | Remark |
| Radiated and Mains Conducted Test | | | | | | | | |
| A | Test stand (type 1) | Custom | 3D printed | - | - | - | - | - |
| B | 8-Pin Captive USB Cable | Custom | Custom | - | - | - | 180 | - |
| C | NFC Card | VTAP | NTAG 216 | - | - | - | - | - |
| 1 | Adapter | OPPO | VC56JACH | J119492AC1009359 | - | - | - | - |
| Conducted Test | | | | | | | | |
| - | 8-Pin Captive USB Cable | Custom | Custom | - | - | - | 180 | - |

## 4.4 Test Setup Diagram

**<Radiated Spurious Emissions Mode>**

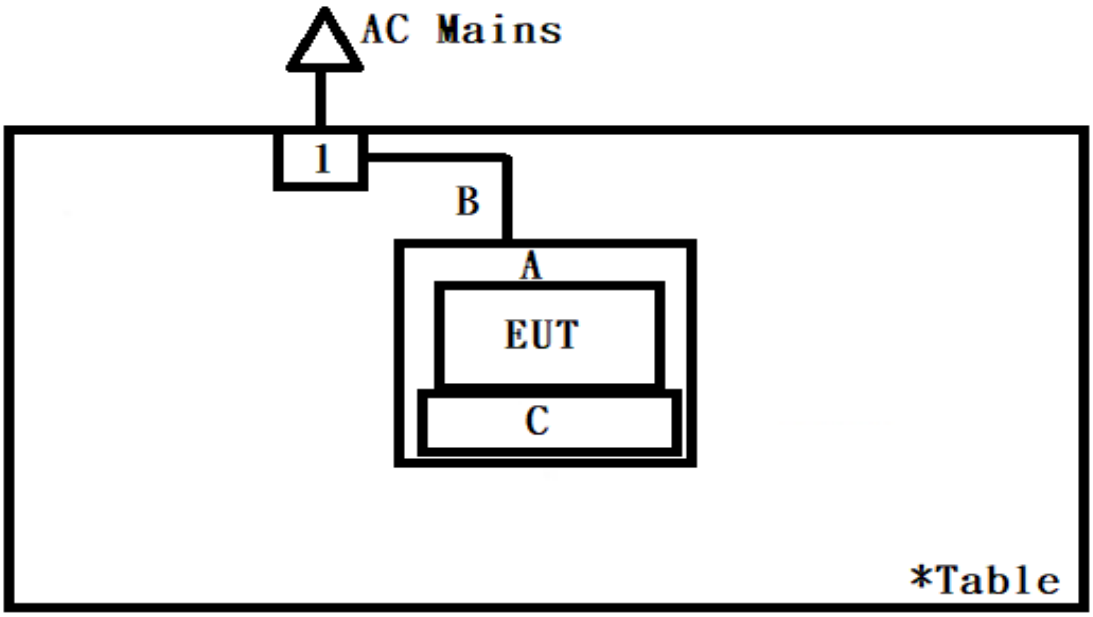


**<Mains Conducted Emission Mode>**

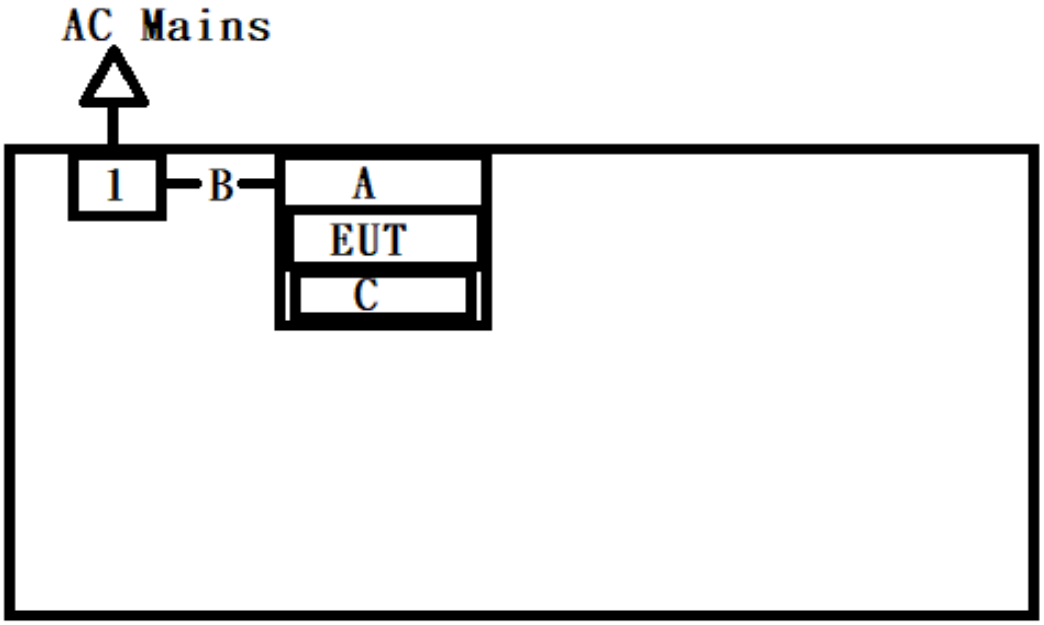

# 5. Test Results

## 5.1 Transmitter Requirement & Test Suites

### 5.1.1 Antenna Requirement

**Requirement** Use of approved antennas only

The antenna is a PCB antenna with no possibility of replacement with a non-approved antenna by the end-user. Therefore, the EUT is considered to comply with this provision.
Refer to EUT photo for details.

## 5.1.2 Field Strength of Fundamental Emissions

**Limit**

a. The field strength of any emissions within the band 13.553-13.567 MHz shall not exceed 15,848 microvolts/meter at 30 meters.
b. Within the bands 13.410-13.553 MHz and 13.567-13.710 MHz, the field strength of any emissions shall not exceed 334 microvolts/meter at 30 meters.
c. Within the bands 13.110-13.410 MHz and 13.710-14.010 MHz the field strength of any emissions shall not exceed 106 microvolts/meter at 30 meters.

**Kind of Test Site** 3m Semi-Anechoic Chamber

**Test Setup**

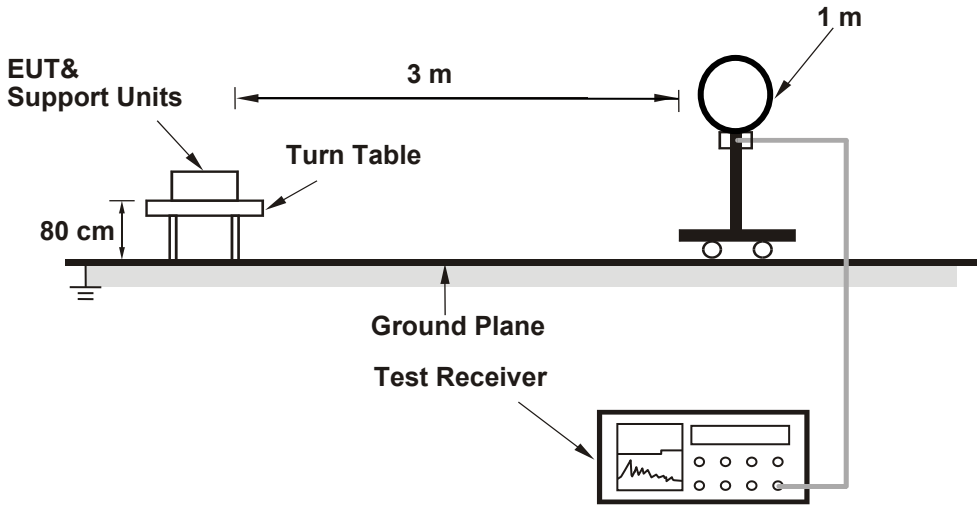


For the actual test configuration, please refer to the attached file (Test Setup Photo).

**Test Instruments**

Test Date: 2025/12/9

| Kind of Equipment | Manufacturer | Type | S/N | Calibration Date | Calibration Due Date |
|---|---|---|---|---|---|
| 30 MHz – 1 GHz | | | | | |
| Receiver | R&S | ESR7 | 102108 | 2025/7/3 | 2026/7/2 |
| Bilog Antenna | SCHWARZBECK | VULB-9170 | 00890 | 2025/4/30 | 2026/4/29 |
| LF-AMP | Agilent | 8447D | 2727A05146 | 2025/1/15 | 2026/1/14 |
| Test Software | Audix E3 | 15914a_20191106 tuv | PK-001087 | N/A | N/A |
| Below 30 MHz | | | | | |
| Receiver | R&S | ESR7 | 102108 | 2025/7/3 | 2026/7/2 |
| Loop Antenna | SCHWARZBECK | FMZB 1519B | 00215 | 2024/12/11 | 2025/12/10 |
| Test Software | Audix E3 | 15914a_20191106 tuv | PK-001087 | N/A | N/A |

**Test Procedures**

a. The EUT was placed on the top of a rotating table 0.8 meters above the ground at a 3 meter chamber room. The table was rotated 360 degrees to determine the position of the highest radiation.
b. The EUT was set 3 meters away from the interference-receiving antenna, which was mounted on the top of a variable-height antenna tower.
c. Parallel (OPEN), perpendicular (CLOSE), and ground-parallel (GROUND) orientations of the antenna are set to make the measurement.
d. For each suspected emission, the EUT was arranged to its worst case and the rotatable table was turned from 0 degrees to 360 degrees to find the maximum reading.
e. The test-receiver system was set to Quasi-Peak Detect Function and Specified Bandwidth with Maximum Hold Mode.

**Note:** The resolution bandwidth and video bandwidth of test receiver/spectrum analyzer is 9 kHz at frequency below 30 MHz.

**Test Results**

Factor (dB/m) = Antenna Factor (dB/m) + Cable Loss (dB) – Amplifier (dB)
Level (dBuV/m) = Reading (dBuV) + Factor (dB/m)
Limit at 30m = 15848 (uV/m)
**Limit at 3m = 20*log(15848)+40log(30m/3m) (dBuV/m)
= 84+40 (dBuV/m)
= 124 (dBuV/m)

Please refer to Appendix A.

## 5.1.3 Radiated Spurious Emissions

**Limit**

The field strength of any emissions appearing outside of the 13.110-14.010 MHz band shall not exceed the general radiated emission limits in §15.209 as below table:

| Frequencies (MHz) | Field Strength (microvolts/meter) | Measurement Distance (meters) |
|---|---|---|
| 0.009 ~ 0.490 | 2400/F (kHz) | 300 |
| 0.490 ~ 1.705 | 24000/F (kHz) | 30 |
| 1.705 ~ 30.0 | 30 | 30 |
| 30 ~ 88 | 100 | 3 |
| 88 ~ 216 | 150 | 3 |
| 216 ~ 960 | 200 | 3 |
| Above 960 | 500 | 3 |

**Kind of Test Site** 3m Semi-Anechoic Chamber

**Test Setup**

**<Radiated Emissions below 30 MHz>**

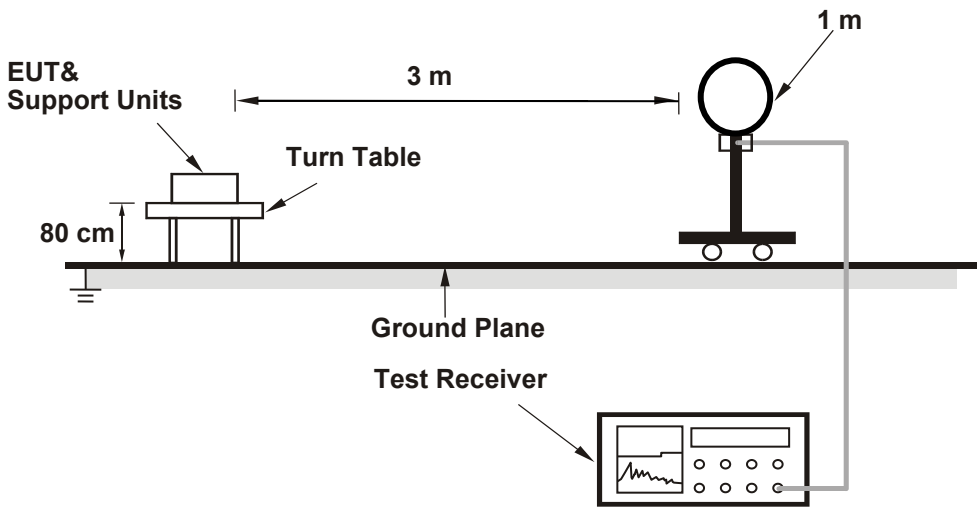

**<Radiated Emissions 30 MHz to 1 GHz>**

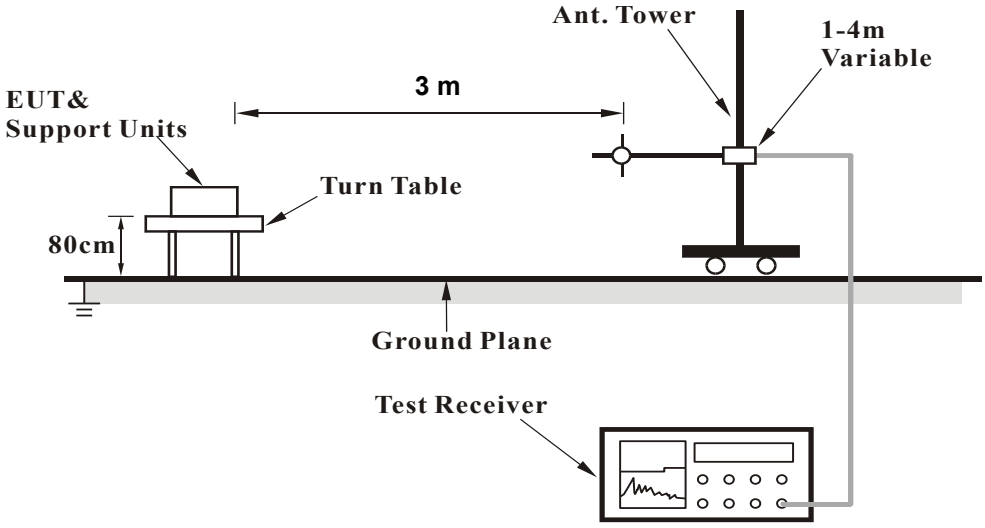


For the actual test configuration, please refer to the attached file (Test Setup Photo).

**Test Instruments**

Please refer to 5.1.2 Instruments

**Test Procedures**

**For Radiated Emissions below 30 MHz**

a. The EUT was placed on the top of a rotating table 0.8 meters above the ground at a 3 meter chamber room. The table was rotated 360 degrees to determine the position of the highest radiation.
b. The EUT was set 3 meters away from the interference-receiving antenna, which was mounted on the top of a variable-height antenna tower.
c. Parallel (OPEN), perpendicular (CLOSE), and ground-parallel (GROUND) orientations of the antenna are set to make the measurement.
d. For each suspected emission, the EUT was arranged to its worst case and the rotatable table was turned from 0 degrees to 360 degrees to find the maximum reading.
e. The test-receiver system was set to Quasi-Peak Detect Function and Specified Bandwidth with Maximum Hold Mode.

Note:

1. The resolution bandwidth and video bandwidth of test receiver/spectrum analyzer is 9 kHz at frequency below 30 MHz.
2. All modes of operation were investigated and the worst-case emissions are reported.

**For Radiated Emissions above 30 MHz**

a. The EUT was placed on the top of a rotating table 0.8 meters (for 30 MHz ~ 1 GHz) / 1.5 meters (for above 1 GHz) above the ground at 3 meter chamber room for test. The table was rotated 360 degrees to determine the position of the highest radiation.
b. The EUT was set 3 meters away from the interference-receiving antenna, which was mounted on the top of a variable-height antenna tower.
c. The height of antenna is varied from one meter to four meters above the ground to determine the maximum value of the field strength. Both horizontal and vertical polarizations of the antenna are set to make the measurement.
d. For each suspected emission, the EUT was arranged to its worst case and then the antenna was tuned to heights from 1 meter to 4 meters and the rotatable table was turned from 0 degrees to 360 degrees to find the maximum reading.
e. The test-receiver system was set to quasi-peak detect function and specified bandwidth with maximum hold mode when the test frequency is below 1 GHz.
f. The test-receiver system was set to peak and average detected function and specified bandwidth with maximum hold mode when the test frequency is above 1 GHz. If the peak reading value also meets average limit, measurement with the average detector is unnecessary.

Note:

1. The resolution bandwidth and video bandwidth of test receiver/spectrum analyzer is 120 kHz for Quasi-peak detection (QP) or Peak detection (PK) at frequency below 1 GHz.
2. All modes of operation were investigated and the worst-case emissions are reported.
3. The Radiated Emissions testing was performed in the X(E1), Y(H) and Z(E2) axis orientation. The worst-case Axis orientation is recorded in this test report.
4. The emission levels of other frequencies (including the 10th harmonic of the highest fundamental frequency) are very lower than the limit and are not shown in the test report.

**Test Results**

Factor (dB/m) = Antenna Factor (dB/m) + Cable Loss (dB) – Amplifier (dB)
Level (dBuV/m) = Reading (dBuV) + Factor (dB/m)

Please refer to Appendix A.

## 5.1.4 Frequency Stability

**Limit**

The frequency tolerance of the carrier signal shall be maintained within +/- 0.01 % of the operating frequency over a temperature variation of -20 degrees to 50 degrees C at normal supply voltage, and for a variation in the primary supply voltage from 85 % to 115 % of the rated supply voltage at a temperature of 20 degrees C.

**Kind of Test Site** Shielded room

**Test Setup**

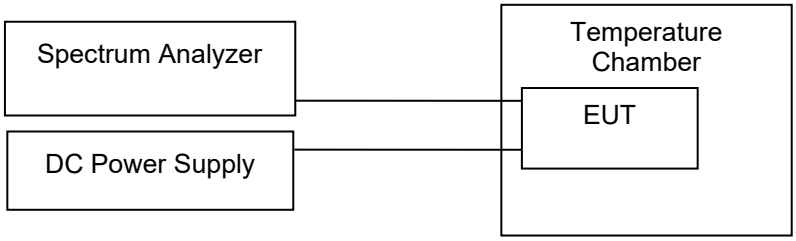


**Test Instruments**

| Kind of Equipment | Manufacturer | Type | S/N | Calibration Date | Calibration Due Date | Test Date | |
|---|---|---|---|---|---|---|---|
| | | | | | | From | Until |
| Spectrum Analyzer | R&S | FSV | 101513 | 2025/05/14 | 2026/05/13 | 2025/12/16 | 2025/12/16 |
| Thermal Chamber | GIANT FORCE | GCT-099-40-S | MAF0103-007 | 2025/02/24 | 2026/02/23 | 2025/12/16 | 2025/12/16 |

**Test Procedures**

a. The EUT was placed inside the environmental test chamber and powered by nominal DC voltage.
b. Turned the EUT on and coupled its output to a spectrum analyzer.
c. Turned the EUT off and set the chamber to the highest temperature specified.
d. Allowed sufficient time (approximately 30 min) for the temperature of the chamber to stabilize then turned the EUT on and measured the operating frequency after 2, 5, and 10 minutes.
e. Repeated step b and c with the temperature chamber set to the lowest temperature.
f. The test chamber was allowed to stabilize at +20 degree C for a minimum of 30 minutes. The supply voltage was then adjusted on the EUT from 85 % to 115 % and the frequency record.

## Test Result

| Frequency (MHz) | | 13.56 | | | | | | | |
|---|---|---|---|---|---|---|---|---|---|
| Voltage | | Vnor: 5 Vdc Vmax: 5.1 Vdc Vmin: 4.9 Vdc | | | | | | | |
| Condition | | Test Time | | | | Frequency Error (%) | | | |
| Extreme | Modulation Mode | 0 min | 2 min | 5 min | 10 min | 0 min | 2 min | 5 min | 10 min |
| $T_{20°C}V_{max}$ | CW | 13.560029 | 13.560029 | 13.560029 | 13.560029 | 0.00021 | 0.00021 | 0.00021 | 0.00021 |
| $T_{20°C}V_{min}$ | CW | 13.560029 | 13.560029 | 13.560029 | 13.560029 | 0.00021 | 0.00021 | 0.00021 | 0.00021 |
| $T_{50°C}V_{nom}$ | CW | 13.560000 | 13.560000 | 13.560000 | 13.560000 | 0.00000 | 0.00000 | 0.00000 | 0.00000 |
| $T_{40°C}V_{nom}$ | CW | 13.560029 | 13.560029 | 13.560000 | 13.560000 | 0.00021 | 0.00021 | 0.00000 | 0.00000 |
| $T_{30°C}V_{nom}$ | CW | 13.560058 | 13.560058 | 13.560058 | 13.560058 | 0.00043 | 0.00043 | 0.00043 | 0.00043 |
| $T_{20°C}V_{nom}$ | CW | 13.560058 | 13.560058 | 13.560029 | 13.560029 | 0.00043 | 0.00043 | 0.00021 | 0.00021 |
| $T_{10°C}V_{nom}$ | CW | 13.560087 | 13.560087 | 13.560116 | 13.560116 | 0.00064 | 0.00064 | 0.00086 | 0.00086 |
| $T_{0°C}V_{nom}$ | CW | 13.560116 | 13.560116 | 13.560116 | 13.560116 | 0.00086 | 0.00086 | 0.00086 | 0.00086 |
| $T_{-10°C}V_{nom}$ | CW | 13.560145 | 13.560145 | 13.560145 | 13.560145 | 0.00107 | 0.00107 | 0.00107 | 0.00107 |
| $T_{-20°C}V_{nom}$ | CW | 13.560145 | 13.560116 | 13.560116 | 13.560116 | 0.00107 | 0.00086 | 0.00086 | 0.00086 |
| Limit (%) | | - | | | | 0.01 | | | |
| Result | | Pass | | | | | | | |

## 5.1.5 20 dB Bandwidth and 99% Occupied Bandwidth

**Limit**

The 20 dB bandwidth shall be specified in operating frequency band.

**Kind of Test Site** Shielded room

**Test Setup**

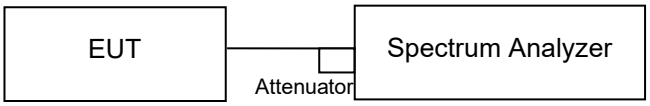


**Test Instruments**

| Kind of Equipment | Manufacturer | Type | S/N | Calibration Date | Calibration Due Date | Test Date | |
|---|---|---|---|---|---|---|---|
| | | | | | | From | Until |
| Spectrum Analyzer | R&S | FSV | 101513 | 2025/05/14 | 2026/05/13 | 2025/12/16 | 2025/12/16 |
| Thermal Chamber | GIANT FORCE | GCT-099-40-S | MAF0103-007 | 2025/02/24 | 2026/02/23 | 2025/12/16 | 2025/12/16 |

**Test Procedure**

**<20 dB Bandwidth>**
The bandwidth of the fundamental frequency was measured by spectrum analyzer with 1 kHz RBW and 3 kHz VBW. The 20 dB bandwidth is defined as the total spectrum the power of which is higher than peak power minus 20 dB.
**<99% Occupied Bandwidth>**
The transmitter output was connected to the spectrum analyzer through an attenuator. The bandwidth of the fundamental frequency was measured by spectrum analyzer with resolution bandwidth in the range of 1 % to 5 % of the anticipated emission bandwidth, and a video bandwidth at least 3x the resolution bandwidth and set the detector to Sampling. The width of a frequency band such that, below the lower and above the upper frequency limits, the mean powers emitted are each equal to a specified percentage 0.5 % of the total mean power of a given emission.

## Test Results

| Plot of 20 dB Bandwidth | Plot of 99% Occupied Bandwidth |
|---|---|
| 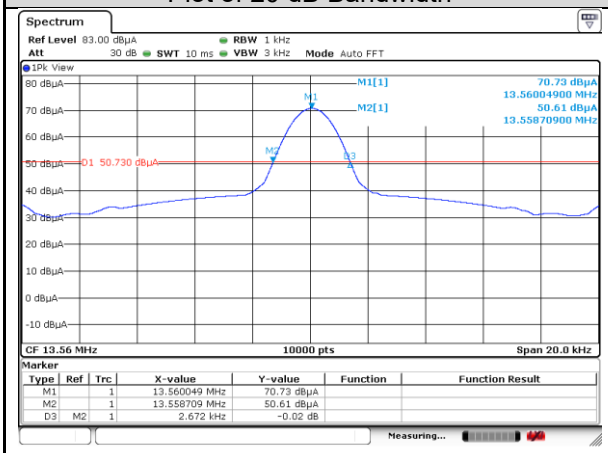 | 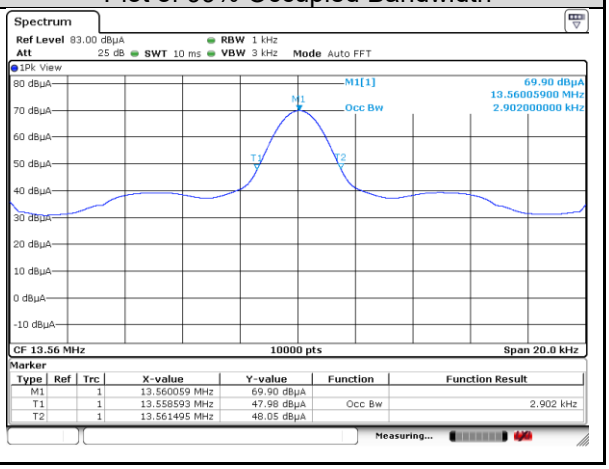 |

# 5.2 Mains Emission

## 5.2.1 Mains Conducted Emission

**Limit**

Mains Conducted emissions as defined in §15.207 must comply with the mains conducted emission limits.

**Kind of Test Site** Shielded room

**Test Setup**

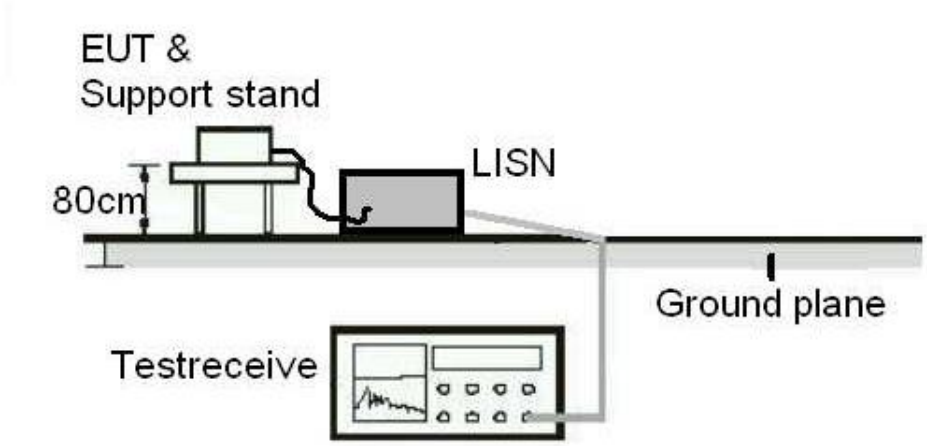


**Test Instruments**

Test Date: 2025/12/11

| Kind of Equipment | Manufacturer | Type | S/N | Calibration Date | Calibration Due Date |
|---|---|---|---|---|---|
| Two-Line V-Network | Rohde & Schwarz | ENV216 | 101243 | 2025/08/6 | 2026/8/5 |
| EMI Test Receiver | R&S | ESCI | 101094 | 2025/11/19 | 2026/11/18 |

**Test Procedures**

a. The EUT was placed 0.4 meters from the conducting wall of the shielded room with EUT being connected to the power mains through a line impedance stabilization network (LISN). Other support units were connected to the power mains through another LISN. The two LISNs provide 50 ohm/50 uH of coupling impedance for the measuring instrument.
b. Both lines of the power mains connected to the EUT were checked for maximum conducted interference.
c. The frequency range from 150 kHz to 30 MHz was searched. Emission levels under (Limit – 20 dB) was not recorded.

Note: The resolution bandwidth and video bandwidth of test receiver is 9 kHz for quasi-peak detection (QP) and average detection (AV) at frequency 0.15 MHz – 30 MHz.

**Test Results**

Please refer to Appendix A.

# Appendix A: Test Results of Radiated Spurious Emissions

## Fundamental Emissions, 13MHz ~ 14.2MHz

| Open | Close |
|---|---|
| 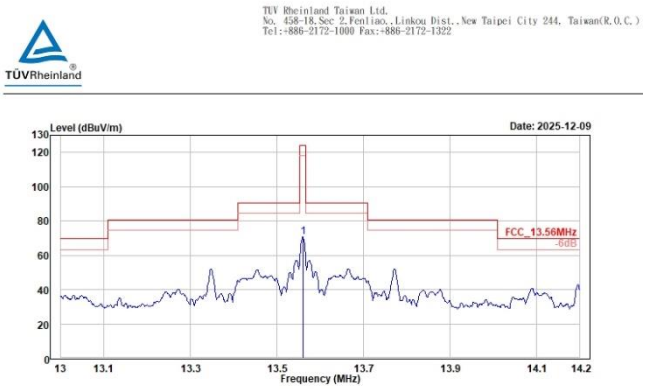 | 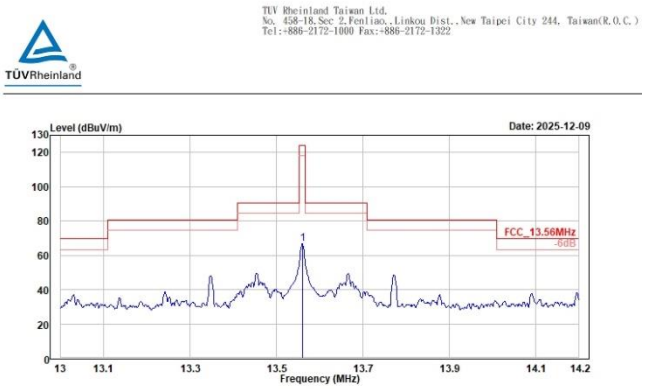 |



| | Freq | Level | Read Level | Factor | Limit Line | Over Limit | APos | TPos | Remark | Pol/Phase | Note |
|---|---|---|---|---|---|---|---|---|---|---|---|
| | MHz | dBuV/m | dBuV | dB/m | dBuV/m | dB | cm | deg | | | |
| 1 | 13.560 | 70.64 | 49.21 | 21.43 | 124.00 | -53.36 | 100 | 353 | Peak | Open | |



| | Freq | Level | Read Level | Factor | Limit Line | Over Limit | APos | TPos | Remark | Pol/Phase | Note |
|---|---|---|---|---|---|---|---|---|---|---|---|
| | MHz | dBuV/m | dBuV | dB/m | dBuV/m | dB | cm | deg | | | |
| 1 | 13.560 | 66.75 | 45.32 | 21.43 | 124.00 | -57.25 | 100 | 268 | Peak | Close | |

## Ground

TÜV Rheinland Taiwan Ltd.
No. 458-18, Sec 2, Renliao., Linkou Dist., New Taipei City 244, Taiwan(R.O.C.)
Tel:+886-2172-1000 Fax:+886-2172-1322

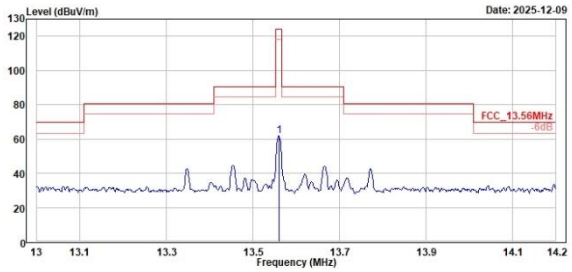


| | Freq | Level | Read Level | Factor | Limit Line | Over Limit | APos | TPos | Remark | Pol/Phase | Note |
|---|---|---|---|---|---|---|---|---|---|---|---|
| | MHz | dBuV/m | dBuV | dB/m | dBuV/m | dB | cm | deg | | | |
| 1 | 13.560 | 61.94 | 40.51 | 21.43 | 124.00 | -62.06 | 100 | 360 | Peak | Ground | |

## Spurious Emissions, Tx Mode, 9kHz ~ 30MHz

### 9kHz~150kHz(Open)

TÜV Rheinland Taiwan Ltd.
No. 458-18, Sec 2, Fenliao., Linkou Dist., New Taipei City 244, Taiwan(R.O.C.)
Tel:+886-2172-1000 Fax:+886-2172-1322

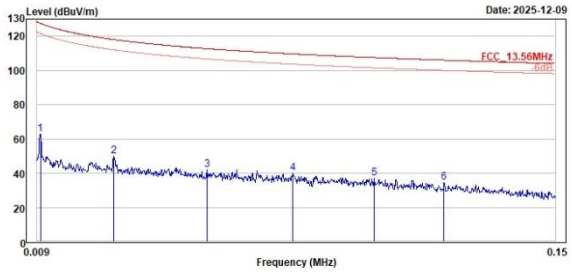


| | Freq | Level | Read Level | Factor | Limit Line | Over Limit | APos | TPos | Remark | Pol/Phase | Note |
|---|---|---|---|---|---|---|---|---|---|---|---|
| | MHz | dBuV/m | dBuV | dB/m | dBuV/m | dB | cm | deg | | | |
| 1 | 0.010 | 62.85 | 44.74 | 18.11 | 127.60 | -64.75 | 100 | 281 | Peak | Open | |
| 2 | 0.030 | 50.07 | 30.06 | 20.01 | 118.05 | -67.98 | 100 | 360 | Peak | Open | |
| 3 | 0.055 | 42.10 | 23.67 | 18.43 | 112.73 | -70.63 | 100 | 198 | Peak | Open | |
| 4 | 0.079 | 40.25 | 21.98 | 18.27 | 109.68 | -69.43 | 100 | 207 | Peak | Open | |
| 5 | 0.101 | 37.24 | 19.21 | 18.03 | 107.53 | -70.29 | 100 | 209 | Peak | Open | |
| 6 | 0.120 | 34.41 | 16.26 | 18.15 | 106.04 | -71.63 | 100 | 198 | Peak | Open | |

### 150kHz~30MHz(Open)

TÜV Rheinland Taiwan Ltd.
No. 458-18, Sec 2, Fenliao., Linkou Dist., New Taipei City 244, Taiwan(R.O.C.)
Tel:+886-2172-1000 Fax:+886-2172-1322

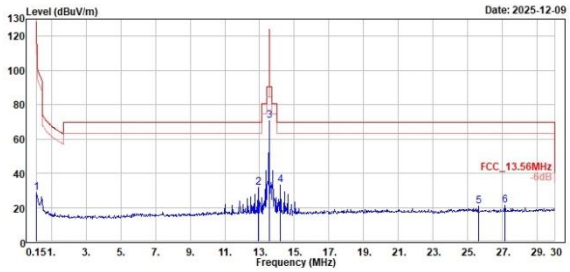


| | Freq | Level | Read Level | Factor | Limit Line | Over Limit | APos | TPos | Remark | Pol/Phase | Note |
|---|---|---|---|---|---|---|---|---|---|---|---|
| | MHz | dBuV/m | dBuV | dB/m | dBuV/m | dB | cm | deg | | | |
| 1 | 0.150 | 28.58 | 10.25 | 18.33 | 104.08 | -75.50 | 100 | 219 | Peak | Open | |
| 2 | 12.926 | 31.75 | 10.32 | 21.43 | 69.50 | -37.75 | 100 | 360 | Peak | Open | |
| 3 | 13.560 | 70.45 | 49.02 | 21.43 | 124.00 | -53.55 | 100 | 1 | Peak | Open | |
| 4 | 14.209 | 33.23 | 11.80 | 21.43 | 69.50 | -36.27 | 100 | 360 | Peak | Open | |
| 5 | 25.612 | 20.75 | -2.06 | 22.81 | 69.50 | -48.75 | 100 | 76 | Peak | Open | |
| 6 | 27.134 | 21.47 | -1.36 | 22.83 | 69.50 | -48.03 | 100 | 150 | Peak | Open | |

## Spurious Emissions, Tx Mode, 30MHz ~ 1GHz

### Horizontal

TÜV Rheinland Taiwan Ltd.
No. 458-18, Sec 2, Fenliao., Linkou Dist., New Taipei City 244, Taiwan(R.O.C.)
Tel:+886-2172-1000 Fax:+886-2172-1322

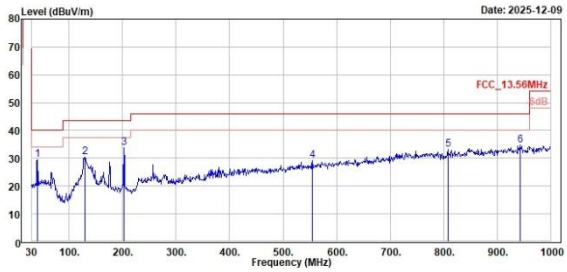


| | Freq | Level | Read Level | Factor | Limit Line | Over Limit | APos | TPos | Remark | Pol/Phase | Note |
|---|---|---|---|---|---|---|---|---|---|---|---|
| | MHz | dBuV/m | dBuV | dB/m | dBuV/m | dB | cm | deg | | | |
| 1 | 40.670 | 29.43 | 36.29 | -6.86 | 40.00 | -10.57 | 200 | 159 | Peak | Horizontal | |
| 2 | 128.940 | 30.41 | 38.75 | -8.34 | 43.50 | -13.09 | 200 | 105 | Peak | Horizontal | |
| 3 | 202.660 | 33.71 | 42.32 | -8.61 | 43.50 | -9.79 | 100 | 148 | Peak | Horizontal | |
| 4 | 554.770 | 29.25 | 29.88 | -0.63 | 46.00 | -16.75 | 200 | 350 | Peak | Horizontal | |
| 5 | 807.940 | 33.08 | 29.43 | 3.65 | 46.00 | -12.92 | 200 | 243 | Peak | Horizontal | |
| 6 | 942.770 | 34.79 | 29.37 | 5.42 | 46.00 | -11.21 | 200 | 320 | Peak | Horizontal | |

### Vertical

TÜV Rheinland Taiwan Ltd.
No. 458-18, Sec 2, Fenliao., Linkou Dist., New Taipei City 244, Taiwan(R.O.C.)
Tel:+886-2172-1000 Fax:+886-2172-1322

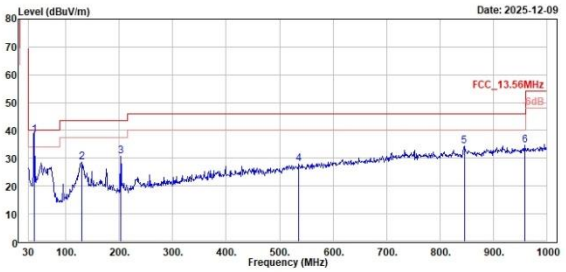


| | Freq | Level | Read Level | Factor | Limit Line | Over Limit | APos | TPos | Remark | Pol/Phase | Note |
|---|---|---|---|---|---|---|---|---|---|---|---|
| | MHz | dBuV/m | dBuV | dB/m | dBuV/m | dB | cm | deg | | | |
| 1 ! | 40.670 | 38.20 | 45.06 | -6.86 | 40.00 | -1.80 | 100 | 90 | QP | Vertical | |
| 2 | 128.940 | 28.53 | 36.87 | -8.34 | 43.50 | -14.97 | 100 | 210 | Peak | Vertical | |
| 3 | 202.660 | 30.81 | 39.42 | -8.61 | 43.50 | -12.69 | 100 | 223 | Peak | Vertical | |
| 4 | 536.340 | 28.09 | 28.81 | -0.72 | 46.00 | -17.91 | 100 | 196 | Peak | Vertical | |
| 5 | 845.770 | 34.50 | 30.66 | 3.84 | 46.00 | -11.50 | 108 | 360 | Peak | Vertical | |
| 6 | 959.260 | 34.77 | 29.28 | 5.49 | 46.00 | -11.23 | 100 | 91 | Peak | Vertical | |

## Mains Conducted Emission, Tx Mode, 150kHz ~ 30MHz

### Worst Band

### (Line)

TÜV Rheinland Taiwan Ltd.
No. 458-18, Sec 2, Fenliao., Linkou Dist., New Taipei City 244, Taiwan(R.O.C.)
Tel:+886-2172-1000 Fax:+886-2172-1322

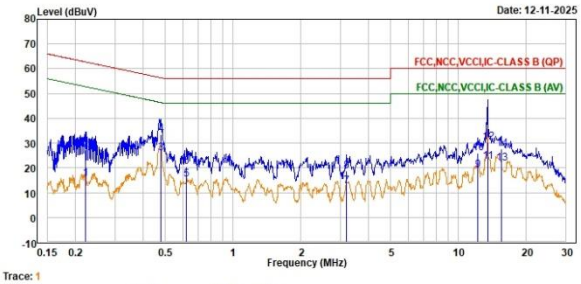


Trace: 1

| | Freq | Level | Read Level | Factor | Limit Line | Over Limit | Remark | Pol/Phase | Note |
|---|---|---|---|---|---|---|---|---|---|
| | MHz | dBuV | dBuV | dB | dBuV | dB | | | |
| 1 | 0.221 | 15.64 | 6.00 | 9.64 | 52.77 | -37.13 | Average | line1 | |
| 2 | 0.221 | 27.22 | 17.58 | 9.64 | 62.77 | -35.55 | QP | line1 | |
| 3 | 0.477 | 26.09 | 16.45 | 9.64 | 46.40 | -20.31 | Average | line1 | |
| 4 | 0.477 | 33.33 | 23.69 | 9.64 | 56.40 | -23.07 | QP | line1 | |
| 5 | 0.621 | 15.18 | 5.54 | 9.64 | 46.00 | -30.82 | Average | line1 | |
| 6 | 0.621 | 20.33 | 10.69 | 9.64 | 56.00 | -35.67 | QP | line1 | |
| 7 | 3.200 | 12.67 | 2.97 | 9.70 | 46.00 | -33.33 | Average | line1 | |
| 8 | 3.200 | 18.66 | 8.96 | 9.70 | 56.00 | -37.34 | QP | line1 | |
| 9 | 12.171 | 19.07 | 9.28 | 9.79 | 50.00 | -30.93 | Average | line1 | |
| 10 | 12.171 | 26.04 | 16.25 | 9.79 | 60.00 | -33.96 | QP | line1 | |
| 11 | 13.514 | 22.65 | 12.85 | 9.80 | 50.00 | -27.35 | Average | line1 | |
| 12 | 13.514 | 30.34 | 20.54 | 9.80 | 60.00 | -29.66 | QP | line1 | |
| 13 | 15.538 | 21.88 | 12.08 | 9.80 | 50.00 | -28.12 | Average | line1 | |
| 14 | 15.538 | 27.81 | 18.01 | 9.80 | 60.00 | -32.19 | QP | line1 | |

### (Neutral)

TÜV Rheinland Taiwan Ltd.
No. 458-18, Sec 2, Fenliao., Linkou Dist., New Taipei City 244, Taiwan(R.O.C.)
Tel:+886-2172-1000 Fax:+886-2172-1322

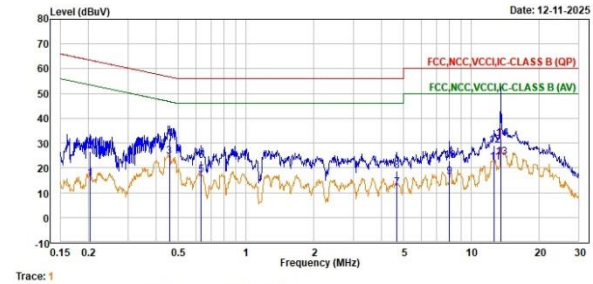


Trace: 1

| | Freq | Level | Read Level | Factor | Limit Line | Over Limit | Remark | Pol/Phase | Note |
|---|---|---|---|---|---|---|---|---|---|
| | MHz | dBuV | dBuV | dB | dBuV | dB | | | |
| 1 | 0.203 | 15.84 | 6.21 | 9.63 | 53.47 | -37.63 | Average | neutral | |
| 2 | 0.203 | 26.70 | 17.07 | 9.63 | 63.47 | -36.77 | QP | neutral | |
| 3 | 0.456 | 24.45 | 14.81 | 9.64 | 46.77 | -22.32 | Average | neutral | |
| 4 | 0.456 | 31.83 | 22.19 | 9.64 | 56.77 | -24.94 | QP | neutral | |
| 5 | 0.633 | 17.20 | 7.55 | 9.65 | 46.00 | -28.80 | Average | neutral | |
| 6 | 0.633 | 22.79 | 13.14 | 9.65 | 56.00 | -33.21 | QP | neutral | |
| 7 | 4.651 | 12.07 | 2.35 | 9.72 | 46.00 | -33.93 | Average | neutral | |
| 8 | 4.651 | 18.63 | 8.91 | 9.72 | 56.00 | -37.37 | QP | neutral | |
| 9 | 8.007 | 16.44 | 6.67 | 9.77 | 50.00 | -33.56 | Average | neutral | |
| 10 | 8.007 | 22.95 | 13.18 | 9.77 | 60.00 | -37.05 | QP | neutral | |
| 11 | 12.666 | 22.28 | 12.45 | 9.83 | 50.00 | -27.72 | Average | neutral | |
| 12 | 12.666 | 28.93 | 19.10 | 9.83 | 60.00 | -31.07 | QP | neutral | |
| 13 | 13.514 | 24.38 | 14.55 | 9.83 | 50.00 | -25.62 | Average | neutral | |
| 14 | 13.514 | 31.91 | 22.08 | 9.83 | 60.00 | -28.09 | QP | neutral | |