BlissLights®

# BlissGlow™

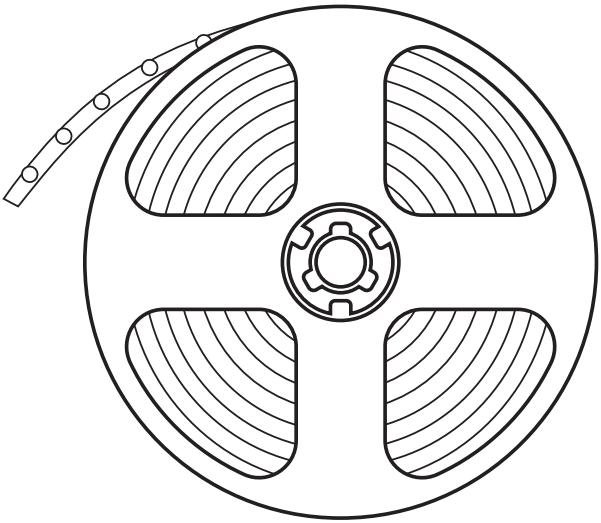

## User's Guide

Model: BlissGlow LED Light Strip

Please ONLY use manufacturer-provided adapter.

## TABLE OF CONTENTS

Notice ..... 1
Introduction ..... 2
Before You Begin ..... 2
Parts List ..... 2
Setting up the Light ..... 3
Download the App ..... 3
Product Specifications ..... 4
Limited Warranty ..... 5
Caution ..... 5
Cleaning Instructions ..... 5
Disposal ..... 5

# NOTICE

**FCC Statement**

This equipment has been tested and found to comply with the limits for a Class B digital device, pursuant to part 15 of the FCC Rules. These limits are designed to provide reasonable protection against harmful interference in a residential installation. This equipment generates, uses and can radiate radio frequency energy and, if not installed and used in accordance with the instructions, may cause harmful interference to radio communications. However, there is no guarantee that interference will not occur in a particular installation. If this equipment does cause harmful interference to radio or television reception, which can be determined by turning the equipment of and on, the user is encouraged to try to correct the interference by one or more of the following measures:

- Reorient or relocate the receiving antenna.
- Increase the separation between the equipment and receiver.
- Connect the equipment into an outlet on a circuit diferent from that to which the receiver is connected.
- Consult the dealer or an experienced radio/TV technician for help.

This device complies with part 15 of the FCC Rules. Operation is subject to the following two conditions:
(1) This device may not cause harmful interference, and (2) this device must accept any interference received, including interference that may cause undesired operation.

**RF Exposure**

The distance between user and device should be no less than 20cm.

Changes or modiications not expressly approved by the party responsible for compliance could void the user’s authority to operate the equipment.

## INTRODUCTION

Thank you for purchasing the BlissLights BlissGlow LED Strip Light. This product is a multicolor LED light strip that can be controlled via app or button controls. Light up any room with a color-changing glow.

## BEFORE YOU BEGIN

Immediately upon receiving the fixture, carefully unpack and check the carton contents to ensure that all parts are present and in good condition. Notify the retailer immediately and retain packing material for inspection if any parts appear damaged from shipping or the carton itself shows signs of mishandling. Save the carton and all packing materials. In the event that the fixture must be returned, it is important that the fixture be returned in the original factory box.  Please see parts list below for box contents.

## PARTS LIST:

1) LED Strip with control box
2) Adapter

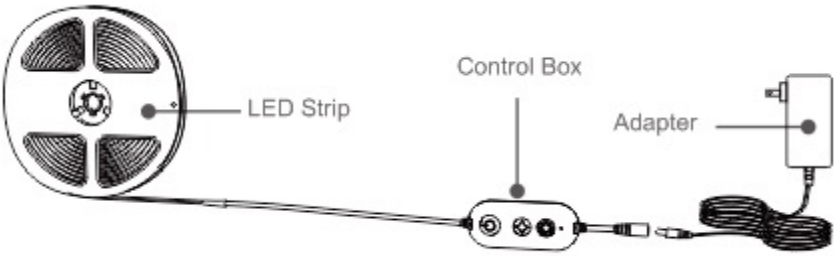


Please note:
Included adapter may vary from picture shown.

## SETTING UP THE LIGHT

1. Unroll the LED strip from the reel. Connect the control box to the adapter cord. It is best practice for users to connect the power adapter to the wall **before** connecting the device to the power adapter. Ensure the light powers on and functions correctly.
2. Clean the desired wall or attachment surface with a damp cloth. The strip will not adhere correctly to a dusty surface.
3. Remove the tape backing a few inches at a time and adhere the strip firmly to the desired surface. Use brackets as needed for added support.
4. Control the strip via app, or use the following button controls to manage lighting effects:

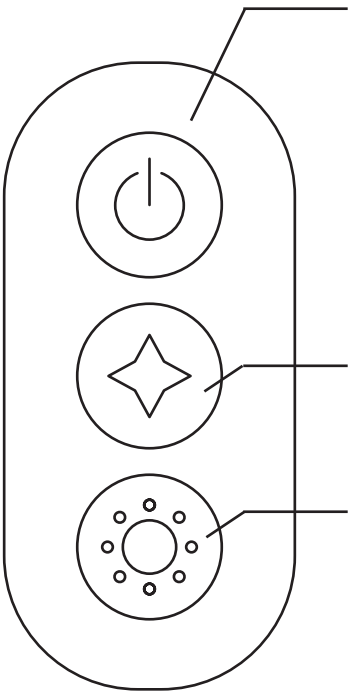

**Power and effects:**

- Press once to power on. To connect to the app, press and hold until the strip flashes 6 times to enable Bluetooth® connection.
- Short press to cycle through preset effects and custom DIY effects created in the app.
- At the end of the presets, press again to power off. (Press and hold the third button to power off without cycling through effects.)

**Music sensing effects:**

- Press to cycle through four music sensing modes and seven solid colors.

**Brightness:**

- Press to cycle through brightness modes.
- Press and hold to power off without cycling through all effects.

## DOWNLOAD THE APP

You can control this light and additional BlissLights through our free app! Scan the QR code to download.

## PRODUCT SPECIFICATIONS

| | |
|---|---|
| LED color: | RGB |
| Output: | 100-240V~50-60Hz |
| Adapter Output: | DC 12V 3A |
| Power Consumption: | 36W |
| Working temperature: | normal natural temperature |
| Power adapter rating: | IP 44 (splash resistant) |
| LED Strip Light rating: | IP 44 (splash resistant) |
| Control box water proof: | IP 00 (dry environments only) |
| Net Weight: | 559G |
| Size of color box: | 252x197x57mm |
| Size of LED Strip: | 5 meters x 10mm |

BlissLights LLC
Oceanside, CA
Made in China

## BLISSLIGHTS LIMITED WARRANTY

This product carries a limited warranty against defects in workmanship and materials. BlissLights LLC agrees to replace the defective product free of charge within the stated warranty period, when returned by the original purchaser with proof of purchase. This product is not guaranteed against wear or breakage due to misuse and/or abuse. For detailed warranty information for your country, please visit **www.blisslights.com/warranty**

## CAUTION

This is not a toy. Young children must be supervised while using this device at all times.
This unit is not waterproof. Use and store indoors or in a dry place.

## CLEANING INSTRUCTIONS

Surface clean only with a soft, dry cloth. Unplug unit before cleaning.

## DISPOSAL

At the end of its serviceable life, this product should not be treated as household or general waste. It should be handed over to the applicable collection point for the recycling of electrical and electronic equipment.

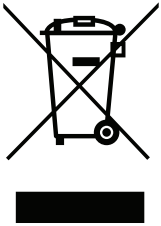

BlissLights®

www.blisslights.com

BlissLights®

# BlissGlow™

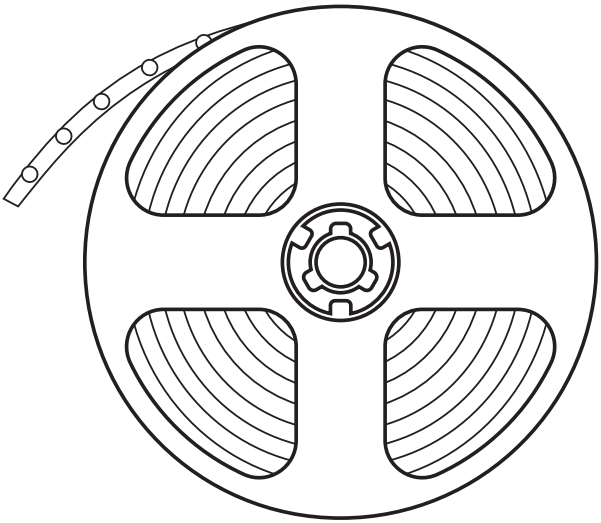

## User's Guide

Model: BlissGlow LED Light Strip

Please ONLY use manufacturer-provided adapter.

## TABLE OF CONTENTS

Notice ..... 1
Introduction ..... 2
Before You Begin ..... 2
Parts List ..... 2
Setting up the Light ..... 3
Download the App ..... 3
Product Specifications ..... 4
Limited Warranty ..... 5
Caution ..... 5
Cleaning Instructions ..... 5
Disposal ..... 5

# NOTICE

**FCC Statement**

This equipment has been tested and found to comply with the limits for a Class B digital device, pursuant to part 15 of the FCC Rules. These limits are designed to provide reasonable protection against harmful interference in a residential installation. This equipment generates, uses and can radiate radio frequency energy and, if not installed and used in accordance with the instructions, may cause harmful interference to radio communications. However, there is no guarantee that interference will not occur in a particular installation. If this equipment does cause harmful interference to radio or television reception, which can be determined by turning the equipment of and on, the user is encouraged to try to correct the interference by one or more of the following measures:

- Reorient or relocate the receiving antenna.
- Increase the separation between the equipment and receiver.
- Connect the equipment into an outlet on a circuit diferent from that to which the receiver is connected.
- Consult the dealer or an experienced radio/TV technician for help.

This device complies with part 15 of the FCC Rules. Operation is subject to the following two conditions:
(1) This device may not cause harmful interference, and (2) this device must accept any interference received, including interference that may cause undesired operation.

**RF Exposure**

The distance between user and device should be no less than 20cm.

Changes or modiications not expressly approved by the party responsible for compliance could void the user’s authority to operate the equipment.

## INTRODUCTION

Thank you for purchasing the BlissLights BlissGlow LED Strip Light. This product is a multicolor LED light strip that can be controlled via app or button controls. Light up any room with a color-changing glow.

## BEFORE YOU BEGIN

Immediately upon receiving the fixture, carefully unpack and check the carton contents to ensure that all parts are present and in good condition. Notify the retailer immediately and retain packing material for inspection if any parts appear damaged from shipping or the carton itself shows signs of mishandling. Save the carton and all packing materials. In the event that the fixture must be returned, it is important that the fixture be returned in the original factory box.  Please see parts list below for box contents.

## PARTS LIST:

1) LED Strip x 2 with control box
2) Adapter

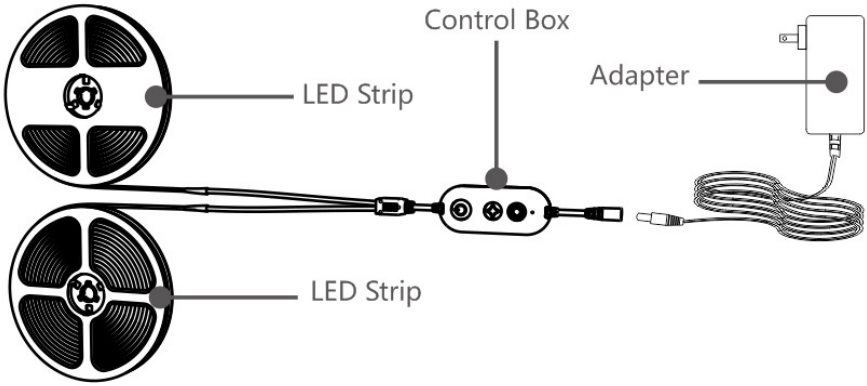


Please note:
Included adapter may vary from picture shown.

## SETTING UP THE LIGHT

1. Unroll the LED strip from the reel. Connect the control box to the adapter cord. It is best practice for users to connect the power adapter to the wall **before** connecting the device to the power adapter. Ensure the light powers on and functions correctly.
2. Clean the desired wall or attachment surface with a damp cloth. The strip will not adhere correctly to a dusty surface.
3. Remove the tape backing a few inches at a time and adhere the strip firmly to the desired surface. Use brackets as needed for added support.
4. Control the strip via app, or use the following button controls to manage lighting effects:

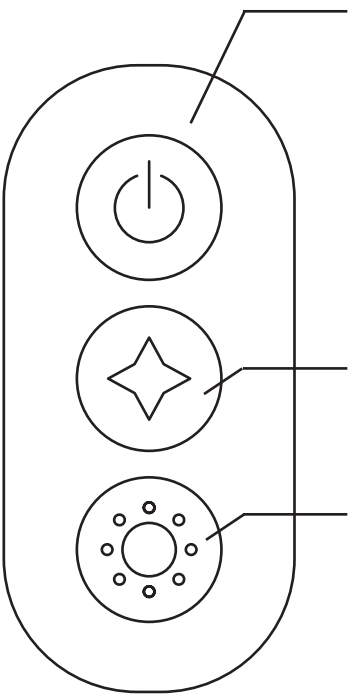

**Power and effects:**

- Press once to power on. To connect to the app, press and hold until the strip flashes 6 times to enable Bluetooth® connection.
- Short press to cycle through preset effects and custom DIY effects created in the app.
- At the end of the presets, press again to power off. (Press and hold the third button to power off without cycling through effects.)

**Music sensing effects:**

- Press to cycle through four music sensing modes and seven solid colors.

**Brightness:**

- Press to cycle through brightness modes.
- Press and hold to power off without cycling through all effects.

## DOWNLOAD THE APP

You can control this light and additional BlissLights through our free app! Scan the QR code to download.

## PRODUCT SPECIFICATIONS

| | |
|---|---|
| LED color: | RGB |
| Output: | 100-240V~50-60Hz |
| Adapter Output: | DC 12V 3A |
| Power Consumption: | 36W |
| Working temperature: | normal natural temperature |
| Power adapter rating: | IP 44 (splash resistant) |
| LED Strip Light rating: | IP 44 (splash resistant) |
| Control box water proof: | IP 00 (dry environments only) |
| Net Weight: | 559G |
| Size of color box: | 252x197x57mm |
| Size of LED Strip: | 5 meters x 10mm x 2 |

BlissLights LLC
Oceanside, CA
Made in China

## BLISSLIGHTS LIMITED WARRANTY

This product carries a limited warranty against defects in workmanship and materials. BlissLights LLC agrees to replace the defective product free of charge within the stated warranty period, when returned by the original purchaser with proof of purchase. This product is not guaranteed against wear or breakage due to misuse and/or abuse. For detailed warranty information for your country, please visit **www.blisslights.com/warranty**

## CAUTION

This is not a toy. Young children must be supervised while using this device at all times.
This unit is not waterproof. Use and store indoors or in a dry place.

## CLEANING INSTRUCTIONS

Surface clean only with a soft, dry cloth. Unplug unit before cleaning.

## DISPOSAL

At the end of its serviceable life, this product should not be treated as household or general waste. It should be handed over to the applicable collection point for the recycling of electrical and electronic equipment.

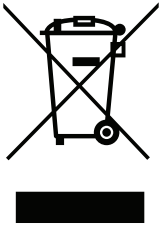

BlissLights®

www.blisslights.com