FCC TEST REPORT

(Part 15, Subpart E)

Applicant:	COOSEA GROUP (HK) COMPANY LIMITED
Address:	UNIT 5-6 16/F MULTIFIELD PLAZA 3-7A PRAT AVENUE TSIMSHATSUI KL, HONG KONG, CHINA

Manufacturer or Supplier:	COOSEA GROUP (HK) COMPANY LIMITED
Address:	UNIT 5-6 16/F MULTIFIELD PLAZA 3-7A PRAT AVENUE TSIMSHATSUI KL, HONG KONG, CHINA
Product:	LTE Smartphone
Brand Name:	Cricket
Model Name:	SL100EA
FCC ID:	2A28USL100EA
Date of tests:	Oct. 27, 2021 ~ Dec. 23, 2021

The tests have been carried out according to the requirements of the following standard:

☒ **FCC Part 15, Subpart E, Section 15.407**

CONCLUSION: The submitted sample was found to COMPLY with the test requirement

Prepared by Simon Wang Engineer / Mobile Department	Approved by Luke Lu Manager / Mobile Department
Simon Date: Dec. 24, 2021	Luke Lu Date: Dec. 24, 2021

This report is governed by, and incorporates by reference, CPS Conditions of Service as posted at the date of issuance of this report at http://www.bureauveritas.com/home/about-us/our-business/cps/about-us/terms-conditions/and is intended for your exclusive use. Any copying or replication of this report to or for any other person or entity, or use of our name or trademark, is permitted only with our prior written permission. This report sets forth our findings solely with respect to the test samples identified herein. The results set forth in this report are not indicative or representative of the quality or characteristics of the lot from which a test sample was taken or any similar or identical product unless specifically and expressly noted. Our report includes all of the tests requested by you and the results thereof based upon the information that you provided to us. Measurement uncertainty is only provided upon request for accredited tests. You have 60 days from date of issuance of this report to notify us of any material error or omission caused by our negligence or if you require measurement uncertainty; provided, however, that such notice shall be in writing and shall specifically address the issue you wish to raise. A failure to raise such issue within the prescribed time shall constitute you unqualified acceptance of the completeness of this report, the tests conducted and the correctness of the report contents.

TABLE OF CONTENTS

RELEASE CONTROL RECORD 4

1 SUMMARY OF TEST RESULTS 5
1.1 MEASUREMENT UNCERTAINTY 5
2 GENERAL INFORMATION 6
2.1 GENERAL DESCRIPTION OF EUT 6
2.2 DESCRIPTION OF TEST MODES 8
2.2.1 TEST MODE APPLICABILITY AND TESTED CHANNEL DETAIL 10
2.3 DUTY CYCLE OF TEST SIGNAL 15
2.4 DESCRIPTION OF SUPPORT UNITS 15
2.4.1 CONFIGURATION OF SYSTEM UNDER TEST 16
2.5 GENERAL DESCRIPTION OF APPLIED STANDARDS 16

3 TEST TYPES AND RESULTS 17

3.1 RADIATED EMISSION AND BANDEDGE MEASUREMENT 17
3.1.1 LIMITS OF RADIATED EMISSION AND BANDEDGE MEASUREMENT 17
3.1.2 LIMITS OF UNWANTED EMISSION 17
3.1.3 TEST INSTRUMENTS 18
3.1.4 TEST PROCEDURES 19
3.1.5 DEVIATION FROM TEST STANDARD 19
3.1.6 TEST SETUP 20
3.1.7 EUT OPERATING CONDITION 21
3.1.8 TEST RESULTS 22
3.2 OUT OF BAND EMISSION MEASUREMENT 97
3.2.1 LIMITS OF OUT OF BAND EMISSION MEASUREMENT 97
3.2.2 TEST INSTRUMENTS 98
3.2.3 TEST PROCEDURES 98
3.2.4 DEVIATION FROM TEST STANDARD 98
3.2.5 TEST SETUP 98
3.2.6 EUT OPERATING CONDITION 98
3.2.7 TEST RESULTS 99
3.3 CONDUCTED EMISSION MEASUREMENT 100
3.3.1 LIMITS OF CONDUCTED EMISSION MEASUREMENT 100
3.3.2 TEST INSTRUMENTS 100
3.3.3 TEST PROCEDURES 100

3.3.4 DEVIATION FROM TEST STANDARD 101
3.3.5 TEST SETUP 101
3.3.6 EUT OPERATING CONDITIONS 101
3.3.7 TEST RESULTS 102
3.4 MAXIMUM CONDUCTED OUTPUT POWER MEASUREMENT 104
3.4.1 LIMITS OF MAXIMUM CONDUCTED OUTPUT POWER MEASUREMENT 104
3.4.2 TEST SETUP 105
3.4.3 TEST INSTRUMENTS 105
3.4.4 TEST PROCEDURE 106
3.4.5 DEVIATION FROM TEST STANDARD 108
3.4.6 EUT OPERATING CONDITIONS 108
3.4.7 TEST RESULTS 109
3.5 MAXIMUM POWER SPECTRAL DENSITY MEASUREMENT 110
3.5.1 LIMITS OF MAXIMUM POWER SPECTRAL DENSITY MEASUREMENT 110
3.5.2 TEST SETUP 110
3.5.3 TEST INSTRUMENTS 110
3.5.4 TEST PROCEDURES 111
3.5.5 DEVIATION FROM TEST STANDARD 111
3.5.6 EUT OPERATING CONDITIONS 111
3.5.7 TEST RESULTS 112

4 PHOTOGRAPHS OF THE TEST CONFIGURATION 113

5 MODIFICATIONS RECORDERS FOR ENGINEERING CHANGES TO THE EUT BY THE LAB114

6 APPENDIX 115

RELEASE CONTROL RECORD

ISSUE NO.	REASON FOR CHANGE	DATE ISSUED
W7L-P21100025RF03	Original release	Dec. 24, 2021

1 SUMMARY OF TEST RESULTS

The EUT has been tested according to the following specifications:

APPLIED STANDARD: FCC PART 15, SUBPART E		
STANDARD SECTION	**TEST TYPE AND LIMIT**	**RESULT**
§15.407(b)(6)	AC Power Conducted Emission	Compliance
15.407(b) §(1/2/3/4/5)	Radiated Emission & Band Edge Measurement	Compliance
§15.407(a/1/2/3)	Maximum conducted output Power	Compliance
§15.407(a/1/2/3)	Peak Power Spectral Density	Compliance
§15.403(i)	26 dB Bandwidth	Compliance
§15.407(e)	6 dB Bandwidth	Compliance
§15.203	Antenna Requirement	Compliance

Note: Except the data of RSE, other data please refer to APPENDIX A.

1.1 MEASUREMENT UNCERTAINTY

Where relevant, the following measurement uncertainty levels have been estimated for tests performed on the EUT as specified in CISPR 16-4-2:

MEASUREMENT	UNCERTAINTY
AC Power Conducted emissions	±2.70dB
Radiated emissions (30MHz~1GMHz)	±4.98dB
Radiated emissions (1GMHz ~6GMHz)	±4.70dB
Radiated emissions (6GMHz ~18GMHz)	±4.60dB
Radiated emissions (18GMHz ~40GMHz)	±4.12dB
Conducted emissions	±4.01dB
Occupied Channel Bandwidth	±43.58KHz
Conducted Output power	±2.06dB
Power Spectral Density	±0.85 dB

This uncertainty represents an expanded uncertainty expressed at approximately the 95% confidence level using a coverage factor of k = 2.

2 GENERAL INFORMATION

2.1 GENERAL DESCRIPTION OF EUT

PRODUCT	LTE Smartphone
BRAND NAME	Cricket
MODEL NAME	SL100EA
NOMINAL VOLTAGE	5.0Vdc(adapter or host equipment) 3.85Vdc (Li-ion, battery)
MODULATION	OFDM
TRANSFER RATE	802.11a: 54.0/ 48.0/ 36.0/ 24.0/ 18.0/ 12.0/ 9.0/ 6.0Mbps 802.11n: up to MCS7 802.11ac: up to 390.0Mbps
OPERATING FREQUENCY	5180 ~ 5240MHz, 5260 ~ 5320MHz, 5500 ~ 5700MHz, 5745 ~ 5825MHz
NUMBER OF CHANNEL	5180 ~ 5240MHz: 4 for 802.11a, 802.11n, 802.11ac (20MHz) 2 for 802.11n, 802.11ac (40MHz) 1 for 802.11ac (80MHz) 5260 ~ 5320MHz: 4 for 802.11a, 802.11n, 802.11ac (20MHz) 2 for 802.11n, 802.11ac (40MHz) 1 for 802.11ac (80MHz) 5500 ~ 5700MHz: 11 for 802.11a, 802.11n, 802.11ac(20MHz) 5 for 802.11n, 802.11ac (40MHz) 2 for 802.11ac (80MHz) 5745 ~ 5825MHz: 5 for 802.11a, 802.11n, 802.11ac (20MHz) 2 for 802.11n, 802.11ac (40MHz) 1 for 802.11ac (80MHz)
AVERAGE POWER	38.73mW for 5180 ~ 5240MHz 42.07mW for 5260 ~ 5320MHz 42.17mW for 5500 ~ 5700MHz 42.17mW for 5745 ~ 5825MHz
ANTENNA TYPE	PIFA Antenna
ANTENNA GAIN	3 dBi for 5180 ~ 5240MHz 3 dBi for 5260 ~ 5320MHz 3 dBi for 5500 ~ 5720MHz 3 dBi for 5745 ~ 5825MHz
HW VERSION	1.0
SW VERSION	SL100EAC010001
I/O PORTS	Refer to user's manual
CABLE SUPPLIED	USB cable: unshielded without ferrite, 1.0meter

NOTE:

1. For a more detailed features description, please refer to the manufacturer's specifications or the user's manual.

2. The EUT incorporates a SISO function. Physically, the EUT provides one completed transmitter and one receiver.

MODULATION MODE	TX FUNCTION
802.11a	1TX/1RX
802.11n/802.11ac (20MHz)	1TX/1RX
802.11n/802.11ac (40MHz)	1TX/1RX
802.11ac (80MHz)	1TX/1RX

3. For the test results, the EUT had been tested with all conditions. But only the worst case was shown in test report.

4. In the finger plate, dial the code for entering Engineer mode: *#*#3646633#*#* EngineerMode->CONNECTIVITY->Wifi->Tx

List of Accessory:

ACCESSORIES	BRAND	MANUFACTURER	MODEL	SPECIFICATION
Battery	COOSEA	ZHONGSHAN TIANMAO BATTERY CO., LTD	BL-A32CT	Capacity：3.85 Vdc, 3450mAh
AC Adapter	COOSEA	Guangdong Beicom Electronics Co., Ltd.	U312E0A050200	I/P:100-240V,50/60Hz,0.35A, O/P: 5.0V,2.0A 10.0W
USB Cable	COOSEA	Wivtak	TP-C0028-B3	Signal Line, 1.0meter

2.2 DESCRIPTION OF TEST MODES

FOR 5150 ~ 5250MHz

4 channels are provided for 802.11a, 802.11n, 802.11ac (20MHz):

CHANNEL	FREQUENCY	CHANNEL	FREQUENCY
36	5180 MHz	44	5220 MHz
40	5200 MHz	48	5240 MHz

2 channels are provided for 802.11n, 802.11ac (40MHz):

CHANNEL	FREQUENCY	CHANNEL	FREQUENCY
38	5190 MHz	46	5230 MHz

1 channel is provided for 802.11ac (80MHz):

CHANNEL	FREQUENCY	CHANNEL	FREQUENCY
42	5210 MHz		

FOR 5250 ~ 5350MHz

4 channels are provided for 802.11a, 802.11n, 802.11ac (20MHz):

CHANNEL	FREQUENCY	CHANNEL	FREQUENCY
52	5260 MHz	60	5300 MHz
56	5280 MHz	64	5320 MHz

2 channels are provided for 802.11n, 802.11ac (40MHz):

CHANNEL	FREQUENCY	CHANNEL	FREQUENCY
54	5270 MHz	62	5310 MHz

1 channel is provided for 802.11ac (80MHz):

CHANNEL	FREQUENCY	CHANNEL	FREQUENCY
58	5290 MHz		

FOR 5470 ~ 5725MHz

11 channels are provided for 802.11a, 802.11n, 802.11ac (20MHz):

CHANNEL	FREQUENCY	CHANNEL	FREQUENCY
100	5500 MHz	124	5620MHz
104	5520 MHz	128	5640MHz
108	5540 MHz	132	5660 MHz
112	5560 MHz	136	5680 MHz
116	5580 MHz	140	5700 MHz
120	5600 MHz		

5 channels are provided for 802.11n, 802.11ac (40MHz):

CHANNEL	FREQUENCY	CHANNEL	FREQUENCY
102	5510 MHz	126	5630MHz
110	5550 MHz	134	5670 MHz
118	5590 MHz		

2 channel is provided for 802.11ac (80MHz):

CHANNEL	FREQUENCY	CHANNEL	FREQUENCY
106	5530 MHz		
122	5610 MHz		

FOR 5725 ~ 5850MHz

5 channels are provided for 802.11a, 802.11n, 802.11ac (20MHz):

CHANNEL	FREQUENCY	CHANNEL	FREQUENCY
149	5745 MHz	161	5805 MHz
153	5765 MHz	165	5825 MHz
157	5785 MHz		

2 channels are provided for 802.11n, 802.11ac (40MHz):

CHANNEL	FREQUENCY	CHANNEL	FREQUENCY
151	5755 MHz	159	5795 MHz

1 channel is provided for 802.11ac (80MHz):

CHANNEL	FREQUENCY	CHANNEL	FREQUENCY
155	5775 MHz		

2.2.1 TEST MODE APPLICABILITY AND TESTED CHANNEL DETAIL

EUT CONFIGURE MODE	APPLICABLE TO				DESCRIPTION
	RE≥1G	RE<1G	PLC	APCM	
A	√	√	√	**-**	**Powered by Adapter with wifi(5G) link**
B	-	-	-	√	Powered by Battery with wifi(5G) link
C	-	-	-	-	Powered by USB with wifi(5G) link

Where **RE≥1G:** Radiated Emission above 1GHz **RE<1G:** Radiated Emission below 1GHz
PLC: Power Line Conducted Emission **APCM:** Antenna Port Conducted Measurement

NOTE:
The EUT had been pre-tested on the positioned of each 3 axis. The worst case was found when positioned on **X-plane.**
NOTE: "-"means no effect.

RADIATED EMISSION TEST (BELOW 1GHz):

☒ Pre-Scan has been conducted to determine the worst-case mode from all possible combinations between available modulations, data rates and antenna ports (if EUT with antenna diversity architecture).
☒ Following channel(s) was (were) selected for the final test as listed below.

EUT CONFIGURE MODE	MODE	FREQ. BAND (MHz)	AVAILABLE CHANNEL	TESTED CHANNEL	MODULATION	DATA RATE (Mbps)
A	802.11n (20MHz)	5180-5240	36 to 48	36	OFDM	MCS0

RADIATED EMISSION TEST (ABOVE 1GHz):

☒ Pre-Scan has been conducted to determine the worst-case mode from all possible combinations between available modulations, data rates and antenna ports (if EUT with antenna diversity architecture).

☒ Following channel(s) was (were) selected for the final test as listed below.

EUT CONFIGURE MODE	MODE	FREQ. BAND (MHz)	AVAILABLE CHANNEL	TESTED CHANNEL	MODULATION	DATA RATE (Mbps)
A	802.11a	5180-5240	36 to 48	36, 40, 48	OFDM	6.0
A	802.11n (20MHz)		36 to 48	36, 40, 48	OFDM	MCS0
A	802.11n (40MHz)		38 to 46	38, 46	OFDM	MCS0
A	802.11ac (20MHz)		36 to 48	36, 40, 48	OFDM	MCS0
A	802.11ac (40MHz)		38 to 46	38, 46	OFDM	MCS0
A	802.11ac (80MHz)		42	42	OFDM	MCS0
A	802.11a	5260-5320	52 to 64	52, 60, 64	OFDM	6.0
A	802.11n (20MHz)		52 to 64	52, 60, 64	OFDM	MCS0
A	802.11n (40MHz)		54 to 62	54, 62	OFDM	MCS0
A	802.11ac (20MHz)		52 to 64	52, 60, 64	OFDM	MCS0
A	802.11ac (40MHz)		54 to 62	54, 62	OFDM	MCS0
A	802.11ac (80MHz)		58	58	OFDM	MCS0
A	802.11a	5500-5700	100 to 140	100, 116, 140	OFDM	6.0
A	802.11n (20MHz)		100 to 140	100, 116, 140	OFDM	MCS0
A	802.11n (40MHz)		102 to 134	102, 110, 134	OFDM	MCS0
A	802.11ac (20MHz)		100 to 140	100, 116, 140	OFDM	MCS0
A	802.11ac (40MHz)		102 to 134	102, 110, 134	OFDM	MCS0
A	802.11ac (80MHz)		106	106	OFDM	MCS0
A	802.11a	5745-5850	149 to 165	100, 116, 140	OFDM	6.0
A	802.11n (20MHz)		149 to 165	100, 116, 140	OFDM	MCS0
A	802.11ac (40MHz)		151 to 159	102, 110, 134	OFDM	MCS0
A	802.11ac (20MHz)		149 to 165	100, 116, 140	OFDM	MCS0
A	802.11n (40MHz)		151 to 159	102, 110, 134	OFDM	MCS0
A	802.11ac (80MHz)		155	106	OFDM	MCS0

POWER LINE CONDUCTED EMISSION TEST:

☒ Pre-Scan has been conducted to determine the worst-case mode from all possible combinations between available modulations, data rates and antenna ports (if EUT with antenna diversity architecture).

☒ Following channel(s) was (were) selected for the final test as listed below.

EUT CONFIGURE MODE	MODE	FREQ. BAND (MHz)	AVAILABLE CHANNEL	TESTED CHANNEL	MODULATION	DATA RATE (Mbps)
A	802.11n (40MHz)	5180-5240	36 to 48	48	OFDM	MCS0

BANDEDGE MEASUREMENT:

☒ Pre-Scan has been conducted to determine the worst-case mode from all possible combinations between available modulations, data rates and antenna ports (if EUT with antenna diversity architecture).

☒ Following channel(s) was (were) selected for the final test as listed below.

EUT CONFIGURE MODE	MODE	FREQ. BAND (MHz)	AVAILABLE CHANNEL	TESTED CHANNEL	MODULATION	DATA RATE (Mbps)
A	802.11a	5180-5240	36 to 48	36, 48	36 to 48	6.0
A	802.11n (20MHz)		36 to 48	36, 48	36 to 48	MCS0
A	802.11n (40MHz)		38 to 46	38, 46	38 to 46	MCS0
A	802.11ac (20MHz)		36 to 48	36, 48	36 to 48	MCS0
A	802.11ac (40MHz)		38 to 46	38, 46	38 to 46	MCS0
A	802.11ac (80MHz)		42	42	42	MCS0
A	802.11a	5260-5320	52 to 64	52, 64	52 to 64	6.0
A	802.11n (20MHz)		52 to 64	52, 64	52 to 64	MCS0
A	802.11n (40MHz)		54 to 62	54, 62	54 to 62	MCS0
A	802.11ac (20MHz)		52 to 64	52, 64	52 to 64	MCS0
A	802.11ac (40MHz)		54 to 62	54, 62	54 to 62	MCS0
A	802.11ac (80MHz)		58	58	58	MCS0
A	802.11a	5500-5700	100 to 140	100, 116, 140	100 to 140	6.0
A	802.11n (20MHz)		100 to 140	100, 116, 140	100 to 140	MCS0
A	802.11n (40MHz)		102 to 134	102, 110, 134	102 to 134	MCS0
A	802.11ac (20MHz)		100 to 140	100, 116, 140	100 to 140	MCS0
A	802.11ac (40MHz)		102 to 134	102, 110, 134	102 to 134	MCS0
A	802.11ac (80MHz)		106	106	106	MCS0

EUT CONFIGURE MODE	MODE	FREQ. BAND (MHz)	AVAILABLE CHANNEL	TESTED CHANNEL	MODULATION	DATA RATE (Mbps)
A	802.11a	5745-5825	149 to 165	149, 157,165	OFDM	6.0
A	802.11n (20MHz)		149 to 165	149, 157,165	OFDM	MCS0
A	802.11n (40MHz)		151 to 159	151, 159	OFDM	MCS0
A	802.11ac (20MHz)		149 to 165	149, 157,165	OFDM	MCS0
A	802.11ac (40MHz)		151 to 159	151, 159	OFDM	MCS0
A	802.11ac (80MHz)		155	155	OFDM	MCS0

ANTENNA PORT CONDUCTED MEASUREMENT:

☒ This item includes all test value of each mode, but only includes spectrum plot of worst value of each mode.

☒ Pre-Scan has been conducted to determine the worst-case mode from all possible combinations between available modulations, data rates and antenna ports (if EUT with antenna diversity architecture).

☒ Following channel(s) was (were) selected for the final test as listed below.

EUT CONFIGURE MODE	MODE	FREQ. BAND (MHz)	AVAILABLE CHANNEL	TESTED CHANNEL	MODULATION	DATA RATE (Mbps)
A	802.11a	5180-5240	36 to 48	36, 40, 48	OFDM	6.0
A	802.11n (20MHz)		36 to 48	36, 40, 48	OFDM	MCS0
A	802.11n (40MHz)		38 to 46	38, 46	OFDM	MCS0
A	802.11ac (20MHz)		36 to 48	36, 40, 48	OFDM	MCS0
A	802.11ac (40MHz)		38 to 46	38, 46	OFDM	MCS0
A	802.11ac (80MHz)		42	42	OFDM	MCS0
A	802.11a	5260-5320	52 to 64	52, 60, 64	OFDM	6.0
A	802.11n (20MHz)		52 to 64	52, 60, 64	OFDM	MCS0
A	802.11n (40MHz)		54 to 62	54, 62	OFDM	MCS0
A	802.11ac (20MHz)		52 to 64	52, 60, 64	OFDM	MCS0
A	802.11ac (40MHz)		54 to 62	54, 62	OFDM	MCS0
A	802.11ac (80MHz)		58	58	OFDM	MCS0
A	802.11a	5500-5700	100 to 140	100, 116, 140,	OFDM	6.0

A	802.11n (20MHz)		100 to 140	100, 116, 140,	OFDM	MCS0
A	802.11n (40MHz)		102 to 134	102, 110, 134,	OFDM	MCS0
A	802.11ac (20MHz)		100 to 140	100, 116, 140,	OFDM	MCS0
A	802.11ac (40MHz)		102 to 134	102, 110, 134,	OFDM	MCS0
A	802.11ac (80MHz)		106	106,	OFDM	MCS0
A	802.11a	5745-5850	149 to 165	149, 157,165	OFDM	6.0
A	802.11n (20MHz)		149 to 165	149, 157,165	OFDM	MCS0
A	802.11n (40MHz)		151 to 159	151, 159	OFDM	MCS0
A	802.11ac (20MHz)		149 to 165	149, 157,165	OFDM	MCS0
A	802.11ac (40MHz)		151 to 159	151, 159	OFDM	MCS0
A	802.11ac (80MHz)		155	155	OFDM	MCS0

TEST CONDITION:

APPLICABLE TO	ENVIRONMENTAL CONDITIONS	INPUT POWER	TESTED BY
RE<1G	23deg. C, 70%RH	DC 5V By Adapter	Star Le
RE≥1G	23deg. C, 70%RH	DC5V By Adapter	Star Le
PLC	25deg. C, 52%RH	DC5V By Adapter	Jimmy Liu
APCM	25deg. C, 60%RH	DC 3.85V By Battery	Lily Zhao

2.3 DUTY CYCLE OF TEST SIGNAL

Please Refer to Appendix A Of this test report.

WORST-CASE DATA:

Measured Duty Cycle		
Mode		Duty Cycle [%]
		ANT1
5GHZ	11a	96.94
	11n20	96.73
	11n40	93.64
	11ac20	96.76
	11ac40	93.68
	11ac80	88.04

Note:
Duty cycle of test signal is < 98%, duty factor shall be considered.

2.4 DESCRIPTION OF SUPPORT UNITS

The EUT has been tested as an independent unit together with other necessary accessories or support units. The following support units or accessories were used to form a representative test configuration during the tests.

NO.	PRODUCT	BRAND	MODEL NO.	SERIAL NO.	FCC ID
1	Desktop	Lenovo	M73 SFF	PC04GRQV	N/A
2	Desktop	Lenovo	M73 SFF	PC06CS27	N/A
3	Laptop	Lenovo	Thnikpad L440	R90FTFKN	N/A

NO.	SIGNAL CABLE DESCRIPTION OF THE ABOVE SUPPORT UNITS
1	AC Line: Unshielded, Detachable 1.5m
2	AC Line: Unshielded, Detachable 1.5m
3	AC Line: Unshielded, Detachable 1.5m

2.4.1 CONFIGURATION OF SYSTEM UNDER TEST

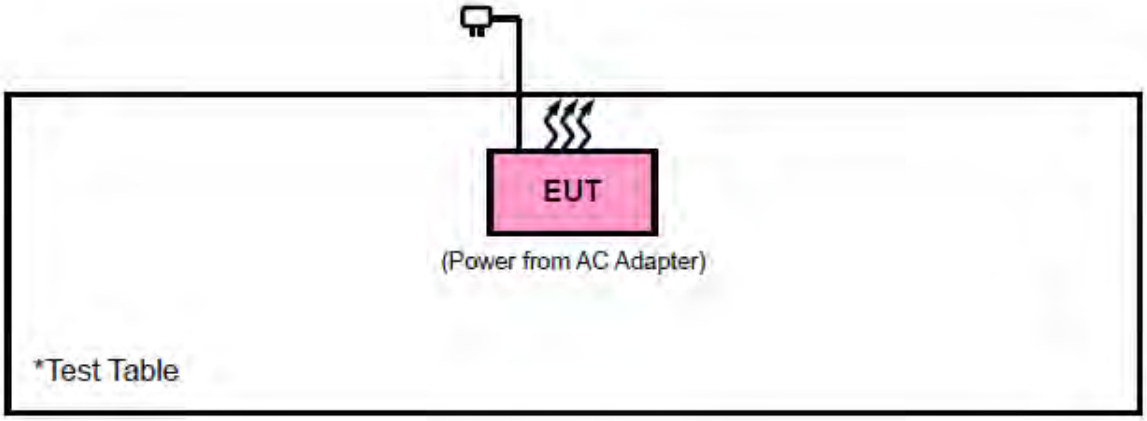

2.5 GENERAL DESCRIPTION OF APPLIED STANDARDS

The EUT is a RF Product. According to the specifications of the manufacturer, it must comply with the requirements of the following standards:

FCC Part 15, Subpart E (15.407)
KDB 789033 D02 General U-NII Test Procedures New Rules v02r01
ANSI C63.10-2013

All test items have been performed and recorded as per the above standards.

NOTE: The EUT is also considered as a kind of computer peripheral, because the connection to computer is necessary for typical use. It has been verified to comply with the requirements of FCC Part 15, Subpart B, Class B (Certification). The test report has been issued separately.

3 TEST TYPES AND RESULTS

3.1 RADIATED EMISSION AND BANDEDGE MEASUREMENT

3.1.1 LIMITS OF RADIATED EMISSION AND BANDEDGE MEASUREMENT

Radiated emissions which fall in the restricted bands must comply with the radiated emission limits specified as below table:

FREQUENCIES (MHz)	FIELD STRENGTH (microvolts/meter)	MEASUREMENT DISTANCE (meters)
0.009 ~ 0.490	2400/F(kHz)	300
0.490 ~ 1.705	24000/F(kHz)	30
1.705 ~ 30.0	30	30
30 ~ 88	100	3
88 ~ 216	150	3
216 ~ 960	200	3
Above 960	500	3

NOTE:

1. The lower limit shall apply at the transition frequencies.
2. Emission level (dBuV/m) = 20 log Emission level (uV/m).
3. For frequencies above 1000MHz, the field strength limits are based on average detector, however, the peak field strength of any emission shall not exceed the maximum permitted average limits, specified above by more than 20dB under any condition of modulation.

3.1.2 LIMITS OF UNWANTED EMISSION

	APPLICABLE TO	LIMIT	
RESTRICTED BANDS	789033 D02 General UNII Test Procedures New Rules v02r01	FIELD STRENGTH AT 3m (dBμV/m)	
		PK : 74	AV : 54
OUT OF THE RESTRICTED BANDS	APPLICABLE TO	EIRP LIMIT (dBm/MHz)	EQUIVALENT FIELD STRENGTH AT 3m (dBμV/m)
	15.407(b)(1)	PK : -27	PK : 68.3
	15.407(b)(2)		
	15.407(b)(3)		
	15.407(b)(4)	See note 2 (FCC 16-24)	

NOTE: The following formula is used to convert the equipment isotropic radiated power (eirp) to field strength:

$$E = \frac{1000000\sqrt{30P}}{3} \quad \mu V/m, \text{ where P is the eirp (Watts).}$$

2. All emissions shall be limited to a level of -27 dBm/MHz at 75 MHz or more above or below the band edge increasing linearly to 10 dBm/MHz at 25 MHz above or below the band edge, and from 25 MHz above or below the band edge increasing linearly to a level of 15.6 dBm/MHz at 5 MHz above or below the band edge, and from 5 MHz above or below the band edge increasing linearly to a level of 27 dBm/MHz at the band edge.

3.1.3 TEST INSTRUMENTS

Equipment	Manufacturer	Model No.	Serial No.	Last Cal.	Next Cal.
3m Semi-anechoic Chamber	ETS-LINDGREN	9m*6m*6m	Euroshieldpn-CT0001143-1216	May. 19,20	May. 18,23
Bilog Antenna	ETS-LINDGREN	3143B	00161965	Mar. 05,21	Mar. 04,22
Horn Antenna	ETS-LINDGREN	3117	00168728	Apr. 02, 21	Apr. 01, 22
Horn Antenna (18GHz-40GHz)	N/A	QWH-SL-18-40-K-SG/QMS-00361	15433	Aug. 25, 21	Aug. 24, 22
Test Software	E3	V 9.160323	N/A	N/A	N/A
Test Software	ADT	ADT_Radiated_V7.6.15.9.2	N/A	N/A	N/A
10dB Attenuator	JFW/USA	50HF-010-SMA	1505	Jun. 03,21	Jun. 02,22
MXE EMI Receiver	KEYSIGHT	N9038A-544	MY54450026	Apr. 27,21	Apr. 26,22
Signal Pre-Amplifier	EMSI	EMC 9135	980249	Jun. 02,21	Jun. 01,22
Signal Pre-Amplifier	EMSI	EMC 012645B	980257	Jun. 02,21	Jun. 01,22
Signal Pre-Amplifier	EMSI	EMC 184045B	980259	Apr. 30,21	Apr. 29,22
DC Source	Kikusui/JP	PMX18-5A	0000001	Aug. 25,21	Aug. 24,22
Power Meter	Anritsu	ML2495A	1506002	Feb. 25,21	Feb. 24,22
Power Sensor	Anritsu	MA2411B	1339352	Feb. 25,21	Feb. 24,22
Loop Antenna	Schwarzbeck	FMZB 1519B	1519B-051	Feb 14,20	Feb. 13,23

NOTE: 1. The calibration interval of the above test instruments is 12 months or 36 months and the calibrations are traceable to CEPREI/CHINA, GRGT/CHINA and NIM/CHINA.

2. The test was performed in 3m Chamber.

3. The FCC Site Registration No. is 525120; The Designation No. is CN1171.

3.1.4 TEST PROCEDURES

a. The EUT was placed on the top of a rotating table 0.8 meters (for below 1GHz) / 1.5 meters (for above 1GHz) above the ground at 3 meter chamber room for test. The table was rotated 360 degrees to determine the position of the highest radiation.

b. The EUT was set 3 meters away from the interference-receiving antenna, which was mounted on the top of a variable-height antenna tower.

c. The antenna is a broadband antenna, and its height is varied from one meter to four meters above the ground to determine the maximum value of the field strength. Both horizontal and vertical polarizations of the antenna are set to make the measurement.

d. For each suspected emission, the EUT was arranged to its worst case and then the antenna was tuned to heights from 1 meter to 4 meters and the rotatable table was turned from 0 degrees to 360 degrees to find the maximum reading.

e. The test-receiver system was set to Peak Detect Function and Specified Bandwidth with Maximum Hold Mode.

f. If the emission level of the EUT in peak mode was 10dB lower than the limit specified, then testing could be stopped and the peak values of the EUT would be reported. Otherwise the emissions that did not have 10dB margin would be re-tested one by one using peak, quasi-peak or average method as specified and then reported in a data sheet.

NOTE:

1. The resolution bandwidth and video bandwidth of test receiver/spectrum analyzer is 120kHz for Peak detection (PK) and Quasi-peak detection (QP) at frequency below 1GHz.
2. The resolution bandwidth of test receiver/spectrum analyzer is 1MHz and video bandwidth is 3MHz for Peak detection at frequency above 1GHz.
3. The resolution bandwidth of test receiver/spectrum analyzer is 1MHz and the video bandwidth is 3MHz for RMS Average (Duty cycle < 98%) for Average detection (AV) at frequency above 1GHz, then the measurement results was added to a correction factor (10 log(1/duty cycle)).
4. The resolution bandwidth of test receiver/spectrum analyzer is 1MHz and the video bandwidth is 10Hz (Duty cycle ≥ 98%) for Average detection (AV) at frequency above 1GHz.
5. All modes of operation were investigated and the worst-case emissions are reported.

3.1.5 DEVIATION FROM TEST STANDARD

No deviation.

3.1.6 TEST SETUP

<Frequency Range 9KHz~30MHz >

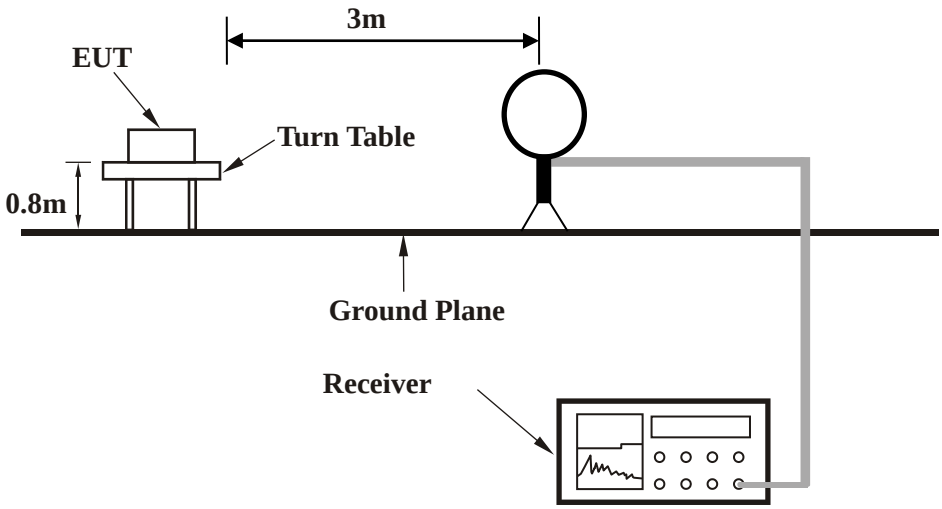

< Frequency Range 30MHz~1GHz >

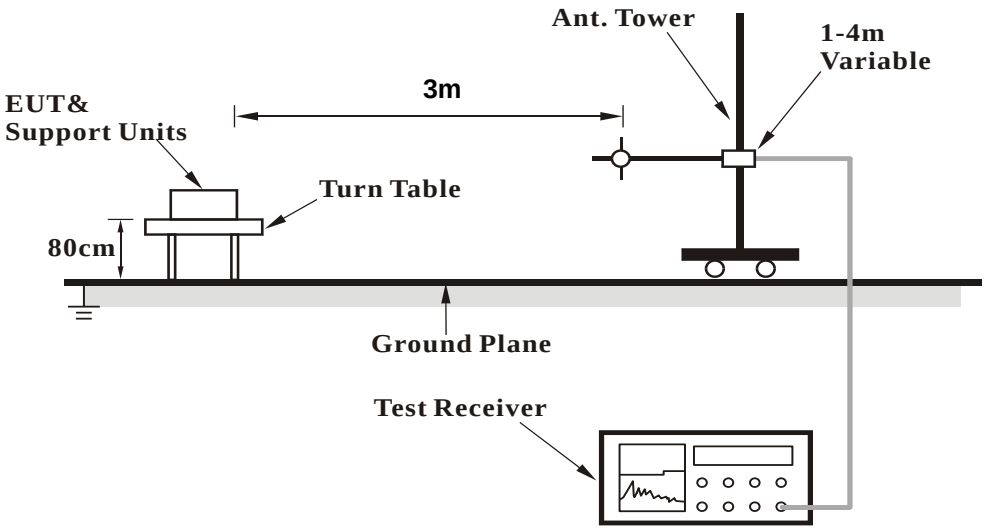

<Frequency Range above 1GHz>

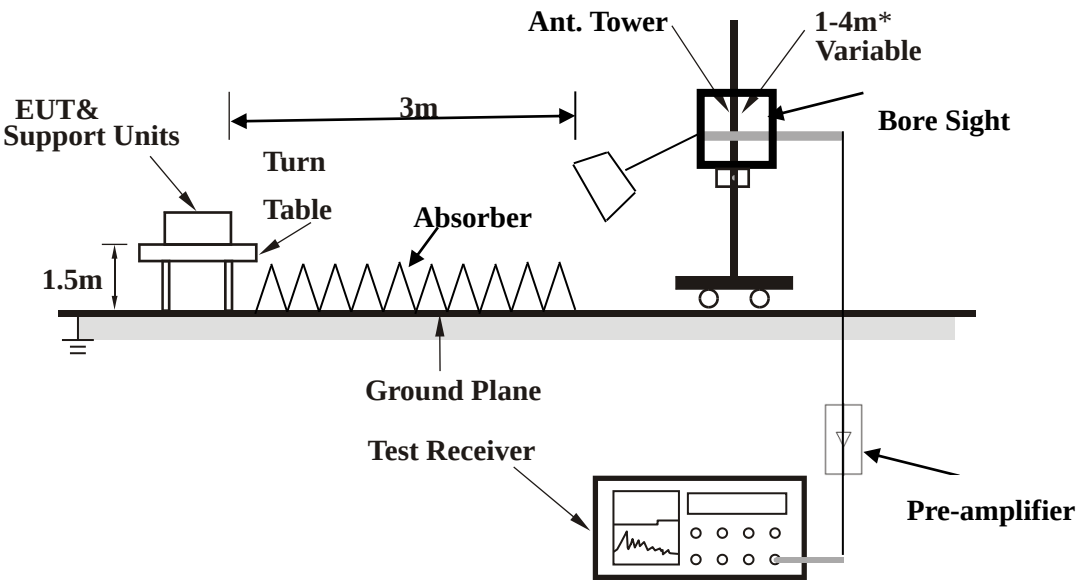

Note: Above 1G is a directional antenna

Depends on the EUT height and the antenna 3dB beamwidth both, refer to section 7.3 of CISPR 16-2-3.

For the actual test configuration, please refer to the attached file (Test Setup Photo).

3.1.7 EUT OPERATING CONDITION

a. Set the EUT under full load condition and placed them on a testing table.

b. Set the transmitter part of EUT under transmission condition continuously at specific channel frequency.

c. The necessary accessories enable the EUT in full functions.

3.1.8 TEST RESULTS

BELOW 1GHz WORST-CASE DATA:

Note: For frequency below 30MHz, the emission was tested 20db below the limit so the data not recorded in the sheet.

30 MHz – 1GHz data:

Band 1

802.11n (20MHz)

CHANNEL	TX Channel 36	**DETECTOR FUNCTION**	Quasi-Peak (QP)
FREQUENCY RANGE	30MHz ~ 1GHz		

ANTENNA POLARITY & TEST DISTANCE: HORIZONTAL AT 3 M										
FREQ. (MHz)	EMISSION LEVEL (dBuV/m)	READ LEVEL (dBuV)	LIMIT (dBuV/m)	MARGIN (dB)	ANTENNA FACTOR (dB /m)	CABLE LOSS (dB)	PREAMP FACTOR (dB)	ANTENNA HEIGHT (cm)	TABLE ANGLE (Degree)	REMARK
32.91	23.31	41.03	40	-16.69	19.43	0.32	37.47	300	360	Peak
56.19	23.06	51.98	40	-16.94	7.98	0.43	37.33	300	360	Peak
85.29	30.34	59.28	40	-9.66	7.85	0.5	37.29	300	360	Peak
174.53	34.08	59.65	43.5	-9.42	10.39	0.7	36.66	300	360	Peak
301.6	17.36	39.15	46	-28.64	14.05	0.91	36.75	300	360	Peak
422.85	20.27	38.72	46	-25.73	17.31	1.11	36.87	300	360	Peak

REMARKS:

1. Emission level (dBuV/m) = Read level (dBuV) + Correction Factor (dB/m).
2. Correction Factor (dB/m) = Antenna Factor (dB/m) + Cable Factor (dB).
3. The other emission levels were very low against the limit.
4. Margin value = Emission level – Limit value.

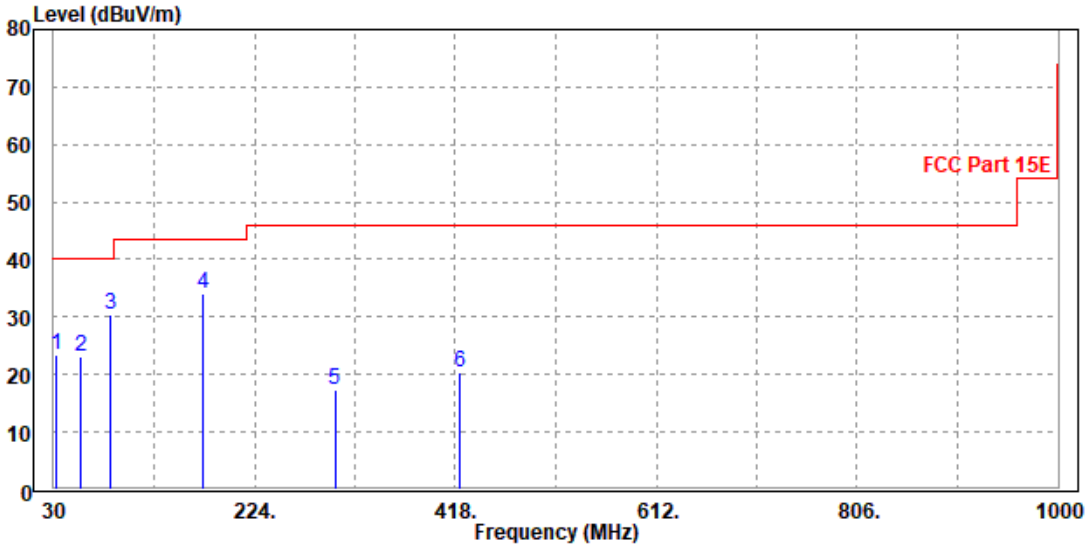

CHANNEL	Channel 36	DETECTOR FUNCTION	Quasi-Peak (QP)
FREQUENCY RANGE	30MHz ~ 1GHz		

ANTENNA POLARITY & TEST DISTANCE: VERTICAL AT 3 M										
FREQ. (MHz)	EMISSION LEVEL (dBuV/m)	READ LEVEL (dBuV)	LIMIT (dBuV/m)	MARGIN (dB)	ANTENNA FACTOR (dB /m)	CABLE LOSS (dB)	PREAMP FACTOR (dB)	ANTENNA HEIGHT (cm)	TABLE ANGLE (Degree)	REMARK
31.94	28.56	46.31	40	-11.44	19.35	0.32	37.42	200	0	Peak
53.28	24.83	53.09	40	-15.17	8.64	0.42	37.32	200	0	Peak
85.29	25.07	53.45	40	-14.93	8.41	0.5	37.29	200	0	Peak
176.47	26.52	51.97	43.5	-16.98	10.51	0.7	36.66	200	0	Peak
422.85	22.34	40.47	46	-23.66	17.63	1.11	36.87	200	0	Peak
594.54	23.43	38.63	46	-22.57	20.8	1.35	37.35	200	0	Peak

REMARKS:

1. Emission level (dBuV/m) = Read level (dBuV) + Correction Factor (dB/m).
2. Correction Factor (dB/m) = Antenna Factor (dB/m) + Cable Factor (dB).
3. The other emission levels were very low against the limit.
4. Margin value = Emission level – Limit value.

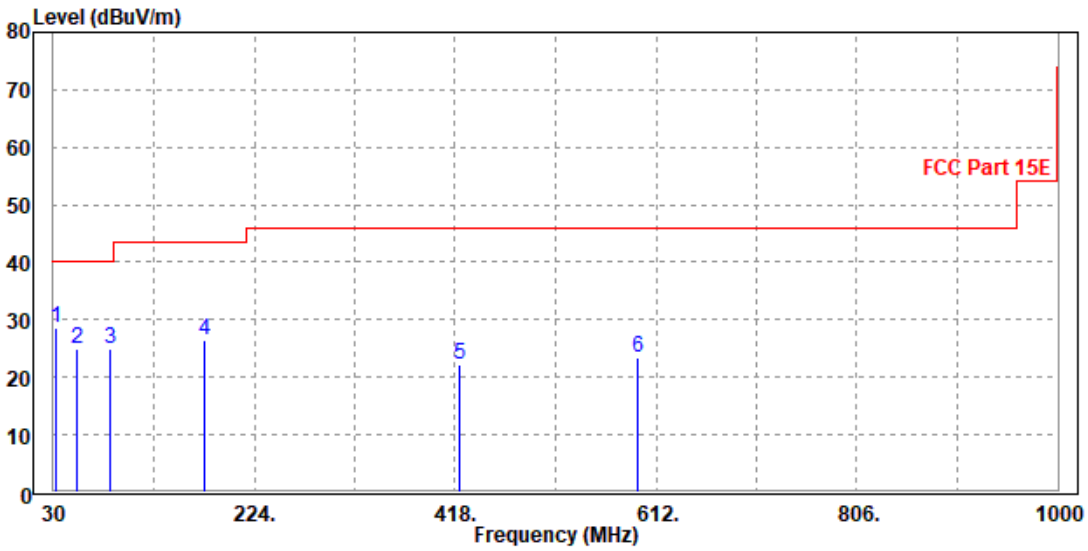

ABOVE 1GHz WORST-CASE DATA:

Note: For higher frequency, the emission is too low to be detected.

Band 1

802.11a

CHANNEL	TX Channel 36	**DETECTOR FUNCTION**	Peak (PK) Average (AV)
FREQUENCY RANGE	1GHz ~ 40GHz		

ANTENNA POLARITY & TEST DISTANCE: HORIZONTAL AT 3 M										
FREQ. (MHz)	**EMISSION LEVEL (dBuV/m)**	**READ LEVEL (dBuV)**	**LIMIT (dBuV/m)**	**MARGIN (dB)**	**ANTENNA FACTOR (dB /m)**	**CABLE LOSS (dB)**	**PREAMP FACTOR (dB)**	**ANTENNA HEIGHT (cm)**	**TABLE ANGLE (Degree)**	**REMARK**
5150	53.55	55.86	74	-20.45	34.52	9.52	46.35	103	350	Peak
5150	48.88	51.19	54	-5.12	34.52	9.52	46.35	103	350	Average
5180	104.99	107.22	/	/	34.54	9.58	46.35	103	350	Peak
5180	97.45	99.68	/	/	34.54	9.58	46.35	103	350	Average
5350	53.69	55.37	74	-20.31	34.68	9.94	46.3	103	350	Peak
5350	47.05	48.73	54	-6.95	34.68	9.94	46.3	103	350	Average
ANTENNA POLARITY & TEST DISTANCE: VERTICAL AT 3 M										
FREQ. (MHz)	**EMISSION LEVEL (dBuV/m)**	**READ LEVEL (dBuV)**	**LIMIT (dBuV/m)**	**MARGIN (dB)**	**ANTENNA FACTOR (dB /m)**	**CABLE LOSS (dB)**	**PREAMP FACTOR (dB)**	**ANTENNA HEIGHT (cm)**	**TABLE ANGLE (Degree)**	**REMARK**
5150	53.38	55.61	74	-20.62	34.6	9.52	46.35	100	295	Peak
5150	47.37	49.6	54	-6.63	34.6	9.52	46.35	100	295	Average
5180	99.8	101.97	/	/	34.6	9.58	46.35	100	295	Peak
5180	92.34	94.51	/	/	34.6	9.58	46.35	100	295	Average
5350	53.41	55.17	74	-20.59	34.6	9.94	46.3	100	295	Peak
5350	47.03	48.79	54	-6.97	34.6	9.94	46.3	100	295	Average

REMARKS:

1. Emission Level = Read Level+ Antenna Factor + Cable Loss- Preamp Factor
   Margin value = Emission level – Limit value.
2. 5180MHz: Fundamental frequency.

CHANNEL	TX Channel 40	**DETECTOR FUNCTION**	Peak (PK) Average (AV)
FREQUENCY RANGE	1GHz ~ 40GHz		

ANTENNA POLARITY & TEST DISTANCE: HORIZONTAL AT 3 M										
FREQ. (MHz)	**EMISSION LEVEL (dBuV/m)**	**READ LEVEL (dBuV)**	**LIMIT (dBuV/m)**	**MARGIN (dB)**	**ANTENNA FACTOR (dB /m)**	**CABLE LOSS (dB)**	**PREAMP FACTOR (dB)**	**ANTENNA HEIGHT (cm)**	**TABLE ANGLE (Degree)**	**REMARK**
5150	55.11	57.42	74	-18.89	34.52	9.52	46.35	103	350	Peak
5150	48.79	51.1	54	-5.21	34.52	9.52	46.35	103	350	Average
5200	105.03	107.19	/	/	34.56	9.62	46.34	103	350	Peak
5200	97.84	100	/	/	34.56	9.62	46.34	103	350	Average
5350	54.39	56.07	74	-19.61	34.68	9.94	46.3	103	350	Peak
5350	47.5	49.18	54	-6.5	34.68	9.94	46.3	103	350	Average
ANTENNA POLARITY & TEST DISTANCE: VERTICAL AT 3 M										
FREQ. (MHz)	**EMISSION LEVEL (dBuV/m)**	**READ LEVEL (dBuV)**	**LIMIT (dBuV/m)**	**MARGIN (dB)**	**ANTENNA FACTOR (dB /m)**	**CABLE LOSS (dB)**	**PREAMP FACTOR (dB)**	**ANTENNA HEIGHT (cm)**	**TABLE ANGLE (Degree)**	**REMARK**
5150	53.59	55.82	74	-20.41	34.6	9.52	46.35	100	295	Peak
5150	48.26	50.49	54	-5.74	34.6	9.52	46.35	100	295	Average
5200	99.41	101.53	/	/	34.6	9.62	46.34	100	295	Peak
5200	91.66	93.78	/	/	34.6	9.62	46.34	100	295	Average
5350	52.27	54.03	74	-21.73	34.6	9.94	46.3	100	295	Peak
5350	46.55	48.31	54	-7.45	34.6	9.94	46.3	100	295	Average

REMARKS:

1. Emission Level = Read Level+ Antenna Factor + Cable Loss- Preamp Factor
   Margin value = Emission level – Limit value.
2. 5200MHz: Fundamental frequency.

CHANNEL	TX Channel 48	DETECTOR FUNCTION	Peak (PK)
FREQUENCY RANGE	1GHz ~ 40GHz		Average (AV)

ANTENNA POLARITY & TEST DISTANCE: HORIZONTAL AT 3 M										
FREQ. (MHz)	EMISSION LEVEL (dBuV/m)	READ LEVEL (dBuV)	LIMIT (dBuV/m)	MARGIN (dB)	ANTENNA FACTOR (dB /m)	CABLE LOSS (dB)	PREAMP FACTOR (dB)	ANTENNA HEIGHT (cm)	TABLE ANGLE (Degree)	REMARK
5150	52.86	55.17	74	-21.14	34.52	9.52	46.35	103	350	Peak
5150	47.89	50.2	54	-6.11	34.52	9.52	46.35	103	350	Average
5240	104.16	106.19	/	/	34.59	9.71	46.33	103	350	Peak
5240	97.49	99.52	/	/	34.59	9.71	46.33	103	350	Average
5350	54.37	56.05	74	-19.63	34.68	9.94	46.3	103	350	Peak
5350	46.96	48.64	54	-7.04	34.68	9.94	46.3	103	350	Average
ANTENNA POLARITY & TEST DISTANCE: VERTICAL AT 3 M										
FREQ. (MHz)	EMISSION LEVEL (dBuV/m)	READ LEVEL (dBuV)	LIMIT (dBuV/m)	MARGIN (dB)	ANTENNA FACTOR (dB /m)	CABLE LOSS (dB)	PREAMP FACTOR (dB)	ANTENNA HEIGHT (cm)	TABLE ANGLE (Degree)	REMARK
5150	53.18	55.41	74	-20.82	34.6	9.52	46.35	105	310	Peak
5150	47.71	49.94	54	-6.29	34.6	9.52	46.35	105	310	Average
5240	100.43	102.45	/	/	34.6	9.71	46.33	105	310	Peak
5240	93.48	95.5	/	/	34.6	9.71	46.33	105	310	Average
5350	53.18	54.94	74	-20.82	34.6	9.94	46.3	105	310	Peak
5350	47.04	48.8	54	-6.96	34.6	9.94	46.3	105	310	Average

REMARKS:

1. Emission Level = Read Level+ Antenna Factor + Cable Loss- Preamp Factor
   Margin value = Emission level – Limit value.
2. 5240MHz: Fundamental frequency.

802.11n (20MHz)

CHANNEL	TX Channel 36	**DETECTOR FUNCTION**	Peak (PK) Average (AV)
FREQUENCY RANGE	1GHz ~ 40GHz		

ANTENNA POLARITY & TEST DISTANCE: HORIZONTAL AT 3 M										
FREQ. (MHz)	EMISSION LEVEL (dBuV/m)	READ LEVEL (dBuV)	LIMIT (dBuV/m)	MARGIN (dB)	ANTENNA FACTOR (dB /m)	CABLE LOSS (dB)	PREAMP FACTOR (dB)	ANTENNA HEIGHT (cm)	TABLE ANGLE (Degree)	REMARK
5150	60.89	63.2	74	-13.11	34.52	9.52	46.35	103	350	Peak
5150	50.87	53.18	54	-3.13	34.52	9.52	46.35	103	350	Average
5180	105.21	107.44	/	/	34.54	9.58	46.35	103	350	Peak
5180	98.17	100.4	/	/	34.54	9.58	46.35	103	350	Average
5350	52.95	54.63	74	-21.05	34.68	9.94	46.3	103	350	Peak
5350	47.18	48.86	54	-6.82	34.68	9.94	46.3	103	350	Average
ANTENNA POLARITY & TEST DISTANCE: VERTICAL AT 3 M										
FREQ. (MHz)	EMISSION LEVEL (dBuV/m)	READ LEVEL (dBuV)	LIMIT (dBuV/m)	MARGIN (dB)	ANTENNA FACTOR (dB /m)	CABLE LOSS (dB)	PREAMP FACTOR (dB)	ANTENNA HEIGHT (cm)	TABLE ANGLE (Degree)	REMARK
5150	56.86	59.09	74	-17.14	34.6	9.52	46.35	100	305	Peak
5150	49.75	51.98	54	-4.25	34.6	9.52	46.35	100	305	Average
5180	99.99	102.16	/	/	34.6	9.58	46.35	100	305	Peak
5180	92.7	94.87	/	/	34.6	9.58	46.35	100	305	Average
5350	52.28	54.04	74	-21.72	34.6	9.94	46.3	100	305	Peak
5350	47.08	48.84	54	-6.92	34.6	9.94	46.3	100	305	Average

REMARKS:

1. Emission Level = Read Level+ Antenna Factor + Cable Loss- Preamp Factor
   Margin value = Emission level – Limit value.
2. 5180MHz: Fundamental frequency.

CHANNEL	TX Channel 40	**DETECTOR FUNCTION**	Peak (PK) Average (AV)
FREQUENCY RANGE	1GHz ~ 40GHz		

ANTENNA POLARITY & TEST DISTANCE: HORIZONTAL AT 3 M										
FREQ. (MHz)	**EMISSION LEVEL (dBuV/m)**	**READ LEVEL (dBuV)**	**LIMIT (dBuV/m)**	**MARGIN (dB)**	**ANTENNA FACTOR (dB /m)**	**CABLE LOSS (dB)**	**PREAMP FACTOR (dB)**	**ANTENNA HEIGHT (cm)**	**TABLE ANGLE (Degree)**	**REMARK**
5150	53.86	56.17	74	-20.14	34.52	9.52	46.35	103	350	Peak
5150	48	50.31	54	-6	34.52	9.52	46.35	103	350	Average
5200	104.93	107.09	/	/	34.56	9.62	46.34	103	350	Peak
5200	98.09	100.25	/	/	34.56	9.62	46.34	103	350	Average
5350	52.51	54.19	74	-21.49	34.68	9.94	46.3	103	350	Peak
5350	46.91	48.59	54	-7.09	34.68	9.94	46.3	103	350	Average
ANTENNA POLARITY & TEST DISTANCE: VERTICAL AT 3 M										
FREQ. (MHz)	**EMISSION LEVEL (dBuV/m)**	**READ LEVEL (dBuV)**	**LIMIT (dBuV/m)**	**MARGIN (dB)**	**ANTENNA FACTOR (dB /m)**	**CABLE LOSS (dB)**	**PREAMP FACTOR (dB)**	**ANTENNA HEIGHT (cm)**	**TABLE ANGLE (Degree)**	**REMARK**
5150	52.77	55	74	-21.23	34.6	9.52	46.35	100	310	Peak
5150	48.3	50.53	54	-5.7	34.6	9.52	46.35	100	310	Average
5200	99.87	101.99	/	/	34.6	9.62	46.34	100	310	Peak
5200	92.42	94.54	/	/	34.6	9.62	46.34	100	310	Average
5350	52.94	54.7	74	-21.06	34.6	9.94	46.3	100	310	Peak
5350	46.61	48.37	54	-7.39	34.6	9.94	46.3	100	310	Average

REMARKS:

1. Emission Level = Read Level+ Antenna Factor + Cable Loss- Preamp Factor
   Margin value = Emission level – Limit value.
2. 5200MHz: Fundamental frequency.

CHANNEL	TX Channel 48	**DETECTOR FUNCTION**	Peak (PK) Average (AV)
FREQUENCY RANGE	1GHz ~ 40GHz		

ANTENNA POLARITY & TEST DISTANCE: HORIZONTAL AT 3 M										
FREQ. (MHz)	**EMISSION LEVEL (dBuV/m)**	**READ LEVEL (dBuV)**	**LIMIT (dBuV/m)**	**MARGIN (dB)**	**ANTENNA FACTOR (dB /m)**	**CABLE LOSS (dB)**	**PREAMP FACTOR (dB)**	**ANTENNA HEIGHT (cm)**	**TABLE ANGLE (Degree)**	**REMARK**
5150	52.83	55.14	74	-21.17	34.52	9.52	46.35	103	350	Peak
5150	48.06	50.37	54	-5.94	34.52	9.52	46.35	103	350	Average
5240	104.62	106.65	/	/	34.59	9.71	46.33	103	350	Peak
5240	97.34	99.37	/	/	34.59	9.71	46.33	103	350	Average
5350	52.66	54.34	74	-21.34	34.68	9.94	46.3	103	350	Peak
5350	46.9	48.58	54	-7.1	34.68	9.94	46.3	103	350	Average
ANTENNA POLARITY & TEST DISTANCE: VERTICAL AT 3 M										
FREQ. (MHz)	**EMISSION LEVEL (dBuV/m)**	**READ LEVEL (dBuV)**	**LIMIT (dBuV/m)**	**MARGIN (dB)**	**ANTENNA FACTOR (dB /m)**	**CABLE LOSS (dB)**	**PREAMP FACTOR (dB)**	**ANTENNA HEIGHT (cm)**	**TABLE ANGLE (Degree)**	**REMARK**
5150	53.65	55.88	74	-20.35	34.6	9.52	46.35	100	95	Peak
5150	48.73	50.96	54	-5.27	34.6	9.52	46.35	100	95	Average
5240	98.69	100.71	/	/	34.6	9.71	46.33	100	95	Peak
5240	92.51	94.53	/	/	34.6	9.71	46.33	100	95	Average
5350	53.77	55.53	74	-20.23	34.6	9.94	46.3	100	95	Peak
5350	46.8	48.56	54	-7.2	34.6	9.94	46.3	100	95	Average

REMARKS:

1. Emission Level = Read Level+ Antenna Factor + Cable Loss- Preamp Factor
   Margin value = Emission level – Limit value.
2. 5240MHz: Fundamental frequency.

802.11n (40MHz)

CHANNEL	TX Channel 38	**DETECTOR FUNCTION**	Peak (PK) Average (AV)
FREQUENCY RANGE	1GHz ~ 40GHz		

ANTENNA POLARITY & TEST DISTANCE: HORIZONTAL AT 3 M										
FREQ. (MHz)	**EMISSION LEVEL (dBuV/m)**	**READ LEVEL (dBuV)**	**LIMIT (dBuV/m)**	**MARGIN (dB)**	**ANTENNA FACTOR (dB /m)**	**CABLE LOSS (dB)**	**PREAMP FACTOR (dB)**	**ANTENNA HEIGHT (cm)**	**TABLE ANGLE (Degree)**	**REMARK**
5150	54.04	56.35	74	-19.96	34.52	9.52	46.35	103	350	Peak
5150	50.62	52.93	54	-3.38	34.52	9.52	46.35	103	350	Average
5190	99.92	102.11	/	/	34.55	9.6	46.34	103	350	Peak
5190	93.22	95.41	/	/	34.55	9.6	46.34	103	350	Average
5350	52.39	54.07	74	-21.61	34.68	9.94	46.3	103	350	Peak
5350	46.98	48.66	54	-7.02	34.68	9.94	46.3	103	350	Average
ANTENNA POLARITY & TEST DISTANCE: VERTICAL AT 3 M										
FREQ. (MHz)	**EMISSION LEVEL (dBuV/m)**	**READ LEVEL (dBuV)**	**LIMIT (dBuV/m)**	**MARGIN (dB)**	**ANTENNA FACTOR (dB /m)**	**CABLE LOSS (dB)**	**PREAMP FACTOR (dB)**	**ANTENNA HEIGHT (cm)**	**TABLE ANGLE (Degree)**	**REMARK**
5150	53.01	55.24	74	-20.99	34.6	9.52	46.35	100	310	Peak
5150	47.87	50.1	54	-6.13	34.6	9.52	46.35	100	310	Average
5190	93.95	96.09	/	/	34.6	9.6	46.34	100	310	Peak
5190	87.56	89.7	/	/	34.6	9.6	46.34	100	310	Average
5350	53.37	55.13	74	-20.63	34.6	9.94	46.3	100	310	Peak
5350	47.77	49.53	54	-6.23	34.6	9.94	46.3	100	310	Average

REMARKS:

1. Emission Level = Read Level+ Antenna Factor + Cable Loss- Preamp Factor
   Margin value = Emission level – Limit value.
2. 5190MHz: Fundamental frequency.

CHANNEL	TX Channel 46	**DETECTOR FUNCTION**	Peak (PK) Average (AV)
FREQUENCY RANGE	1GHz ~ 40GHz		

ANTENNA POLARITY & TEST DISTANCE: HORIZONTAL AT 3 M										
FREQ. (MHz)	**EMISSION LEVEL (dBuV/m)**	**READ LEVEL (dBuV)**	**LIMIT (dBuV/m)**	**MARGIN (dB)**	**ANTENNA FACTOR (dB /m)**	**CABLE LOSS (dB)**	**PREAMP FACTOR (dB)**	**ANTENNA HEIGHT (cm)**	**TABLE ANGLE (Degree)**	**REMARK**
5150	55.18	57.49	74	-18.82	34.52	9.52	46.35	103	350	Peak
5150	48.6	50.91	54	-5.4	34.52	9.52	46.35	103	350	Average
5230	100.19	102.25	/	/	34.58	9.69	46.33	103	350	Peak
5230	94.51	96.57	/	/	34.58	9.69	46.33	103	350	Average
5350	53.59	55.27	74	-20.41	34.68	9.94	46.3	103	350	Peak
5350	46.92	48.6	54	-7.08	34.68	9.94	46.3	103	350	Average
ANTENNA POLARITY & TEST DISTANCE: VERTICAL AT 3 M										
FREQ. (MHz)	**EMISSION LEVEL (dBuV/m)**	**READ LEVEL (dBuV)**	**LIMIT (dBuV/m)**	**MARGIN (dB)**	**ANTENNA FACTOR (dB /m)**	**CABLE LOSS (dB)**	**PREAMP FACTOR (dB)**	**ANTENNA HEIGHT (cm)**	**TABLE ANGLE (Degree)**	**REMARK**
5150	52.77	55	74	-21.23	34.6	9.52	46.35	100	310	Peak
5150	47.85	50.08	54	-6.15	34.6	9.52	46.35	100	310	Average
5230	95.54	97.58	/	/	34.6	9.69	46.33	100	310	Peak
5230	88.88	90.92	/	/	34.6	9.69	46.33	100	310	Average
5350	53.14	54.9	74	-20.86	34.6	9.94	46.3	100	310	Peak
5350	47.51	49.27	54	-6.49	34.6	9.94	46.3	100	310	Average

REMARKS:

1. Emission Level = Read Level+ Antenna Factor + Cable Loss- Preamp Factor
   Margin value = Emission level – Limit value.
2. 5230MHz: Fundamental frequency.

802.11ac (20MHz)

CHANNEL	TX Channel 36	**DETECTOR FUNCTION**	Peak (PK) Average (AV)
FREQUENCY RANGE	1GHz ~ 40GHz		

ANTENNA POLARITY & TEST DISTANCE: HORIZONTAL AT 3 M										
FREQ. (MHz)	**EMISSION LEVEL (dBuV/m)**	**READ LEVEL (dBuV)**	**LIMIT (dBuV/m)**	**MARGIN (dB)**	**ANTENNA FACTOR (dB /m)**	**CABLE LOSS (dB)**	**PREAMP FACTOR (dB)**	**ANTENNA HEIGHT (cm)**	**TABLE ANGLE (Degree)**	**REMARK**
5150	55.31	57.62	74	-18.69	34.52	9.52	46.35	103	350	Peak
5150	48.77	51.08	54	-5.23	34.52	9.52	46.35	103	350	Average
5180	104.74	106.97	/	/	34.54	9.58	46.35	103	350	Peak
5180	96.84	99.07	/	/	34.54	9.58	46.35	103	350	Average
5350	54.16	55.84	74	-19.84	34.68	9.94	46.3	103	350	Peak
5350	47.35	49.03	54	-6.65	34.68	9.94	46.3	103	350	Average
ANTENNA POLARITY & TEST DISTANCE: VERTICAL AT 3 M										
FREQ. (MHz)	**EMISSION LEVEL (dBuV/m)**	**READ LEVEL (dBuV)**	**LIMIT (dBuV/m)**	**MARGIN (dB)**	**ANTENNA FACTOR (dB /m)**	**CABLE LOSS (dB)**	**PREAMP FACTOR (dB)**	**ANTENNA HEIGHT (cm)**	**TABLE ANGLE (Degree)**	**REMARK**
5150	53.65	55.88	74	-20.35	34.6	9.52	46.35	100	310	Peak
5150	48.31	50.54	54	-5.69	34.6	9.52	46.35	100	310	Average
5180	98.25	100.42	/	/	34.6	9.58	46.35	100	310	Peak
5180	90.77	92.94	/	/	34.6	9.58	46.35	100	310	Average
5350	55.57	57.33	74	-18.43	34.6	9.94	46.3	100	310	Peak
5350	47.09	48.85	54	-6.91	34.6	9.94	46.3	100	310	Average

REMARKS:

1. Emission Level = Read Level+ Antenna Factor + Cable Loss- Preamp Factor
   Margin value = Emission level – Limit value.
2. 5180MHz: Fundamental frequency.

CHANNEL	TX Channel 40	**DETECTOR FUNCTION**	Peak (PK) Average (AV)
FREQUENCY RANGE	1GHz ~ 40GHz		

ANTENNA POLARITY & TEST DISTANCE: HORIZONTAL AT 3 M										
FREQ. (MHz)	**EMISSION LEVEL (dBuV/m)**	**READ LEVEL (dBuV)**	**LIMIT (dBuV/m)**	**MARGIN (dB)**	**ANTENNA FACTOR (dB /m)**	**CABLE LOSS (dB)**	**PREAMP FACTOR (dB)**	**ANTENNA HEIGHT (cm)**	**TABLE ANGLE (Degree)**	**REMARK**
5150	53.38	55.69	74	-20.62	34.52	9.52	46.35	103	350	Peak
5150	47.85	50.16	54	-6.15	34.52	9.52	46.35	103	350	Average
5200	104.07	106.23	/	/	34.56	9.62	46.34	103	350	Peak
5200	96.7	98.86	/	/	34.56	9.62	46.34	103	350	Average
5350	54.25	55.93	74	-19.75	34.68	9.94	46.3	103	350	Peak
5350	47.01	48.69	54	-6.99	34.68	9.94	46.3	103	350	Average
ANTENNA POLARITY & TEST DISTANCE: VERTICAL AT 3 M										
FREQ. (MHz)	**EMISSION LEVEL (dBuV/m)**	**READ LEVEL (dBuV)**	**LIMIT (dBuV/m)**	**MARGIN (dB)**	**ANTENNA FACTOR (dB /m)**	**CABLE LOSS (dB)**	**PREAMP FACTOR (dB)**	**ANTENNA HEIGHT (cm)**	**TABLE ANGLE (Degree)**	**REMARK**
5150	53.42	55.65	74	-20.58	34.6	9.52	46.35	100	310	Peak
5150	47.23	49.46	54	-6.77	34.6	9.52	46.35	100	310	Average
5200	98.48	100.6	/	/	34.6	9.62	46.34	100	310	Peak
5200	90.99	93.11	/	/	34.6	9.62	46.34	100	310	Average
5350	54.08	55.84	74	-19.92	34.6	9.94	46.3	100	310	Peak
5350	47.22	48.98	54	-6.78	34.6	9.94	46.3	100	310	Average

REMARKS:

1. Emission Level = Read Level+ Antenna Factor + Cable Loss- Preamp Factor
   Margin value = Emission level – Limit value.
2. 5200MHz: Fundamental frequency.

CHANNEL	TX Channel 48	**DETECTOR FUNCTION**	Peak (PK) Average (AV)
FREQUENCY RANGE	1GHz ~ 40GHz		

ANTENNA POLARITY & TEST DISTANCE: HORIZONTAL AT 3 M										
FREQ. (MHz)	**EMISSION LEVEL (dBuV/m)**	**READ LEVEL (dBuV)**	**LIMIT (dBuV/m)**	**MARGIN (dB)**	**ANTENNA FACTOR (dB /m)**	**CABLE LOSS (dB)**	**PREAMP FACTOR (dB)**	**ANTENNA HEIGHT (cm)**	**TABLE ANGLE (Degree)**	**REMARK**
5150	53.62	55.93	74	-20.38	34.52	9.52	46.35	103	350	Peak
5150	47.57	49.88	54	-6.43	34.52	9.52	46.35	103	350	Average
5240	102.92	104.95	/	/	34.59	9.71	46.33	103	350	Peak
5240	96.61	98.64	/	/	34.59	9.71	46.33	103	350	Average
5350	52.77	54.45	74	-21.23	34.68	9.94	46.3	103	350	Peak
5350	46.91	48.59	54	-7.09	34.68	9.94	46.3	103	350	Average
ANTENNA POLARITY & TEST DISTANCE: VERTICAL AT 3 M										
FREQ. (MHz)	**EMISSION LEVEL (dBuV/m)**	**READ LEVEL (dBuV)**	**LIMIT (dBuV/m)**	**MARGIN (dB)**	**ANTENNA FACTOR (dB /m)**	**CABLE LOSS (dB)**	**PREAMP FACTOR (dB)**	**ANTENNA HEIGHT (cm)**	**TABLE ANGLE (Degree)**	**REMARK**
5150	53.29	55.52	74	-20.71	34.6	9.52	46.35	100	310	Peak
5150	47.27	49.5	54	-6.73	34.6	9.52	46.35	100	310	Average
5240	98.07	100.09	/	/	34.6	9.71	46.33	100	310	Peak
5240	91.42	93.44	/	/	34.6	9.71	46.33	100	310	Average
5350	52.86	54.62	74	-21.14	34.6	9.94	46.3	100	310	Peak
5350	46.65	48.41	54	-7.35	34.6	9.94	46.3	100	310	Average

REMARKS:

1. Emission Level = Read Level+ Antenna Factor + Cable Loss- Preamp Factor
   Margin value = Emission level – Limit value.
2. 5240MHz: Fundamental frequency.

802.11ac (40MHz)

CHANNEL	TX Channel 38	**DETECTOR FUNCTION**	Peak (PK) Average (AV)
FREQUENCY RANGE	1GHz ~ 40GHz		

ANTENNA POLARITY & TEST DISTANCE: HORIZONTAL AT 3 M										
FREQ. (MHz)	**EMISSION LEVEL (dBuV/m)**	**READ LEVEL (dBuV)**	**LIMIT (dBuV/m)**	**MARGIN (dB)**	**ANTENNA FACTOR (dB /m)**	**CABLE LOSS (dB)**	**PREAMP FACTOR (dB)**	**ANTENNA HEIGHT (cm)**	**TABLE ANGLE (Degree)**	**REMARK**
5150	53.43	55.74	74	-20.57	34.52	9.52	46.35	103	350	Peak
5150	48.9	51.21	54	-5.1	34.52	9.52	46.35	103	350	Average
5190	100.08	102.27	/	/	34.55	9.6	46.34	103	350	Peak
5190	92.81	95	/	/	34.55	9.6	46.34	103	350	Average
5350	52.5	54.18	74	-21.5	34.68	9.94	46.3	103	350	Peak
5350	46.61	48.29	54	-7.39	34.68	9.94	46.3	103	350	Average
ANTENNA POLARITY & TEST DISTANCE: VERTICAL AT 3 M										
FREQ. (MHz)	**EMISSION LEVEL (dBuV/m)**	**READ LEVEL (dBuV)**	**LIMIT (dBuV/m)**	**MARGIN (dB)**	**ANTENNA FACTOR (dB /m)**	**CABLE LOSS (dB)**	**PREAMP FACTOR (dB)**	**ANTENNA HEIGHT (cm)**	**TABLE ANGLE (Degree)**	**REMARK**
5150	52.63	54.86	74	-21.37	34.6	9.52	46.35	100	310	Peak
5150	47.77	50	54	-6.23	34.6	9.52	46.35	100	310	Average
5190	94.1	96.24	/	/	34.6	9.6	46.34	100	310	Peak
5190	86.95	89.09	/	/	34.6	9.6	46.34	100	310	Average
5350	54.82	56.58	74	-19.18	34.6	9.94	46.3	100	310	Peak
5350	46.69	48.45	54	-7.31	34.6	9.94	46.3	100	310	Average

REMARKS:

1. Emission Level = Read Level+ Antenna Factor + Cable Loss- Preamp Factor
   Margin value = Emission level – Limit value.
2. 5190MHz: Fundamental frequency.

CHANNEL	TX Channel 46	**DETECTOR FUNCTION**	Peak (PK) Average (AV)
FREQUENCY RANGE	1GHz ~ 40GHz		

ANTENNA POLARITY & TEST DISTANCE: HORIZONTAL AT 3 M										
FREQ. (MHz)	**EMISSION LEVEL (dBuV/m)**	**READ LEVEL (dBuV)**	**LIMIT (dBuV/m)**	**MARGIN (dB)**	**ANTENNA FACTOR (dB /m)**	**CABLE LOSS (dB)**	**PREAMP FACTOR (dB)**	**ANTENNA HEIGHT (cm)**	**TABLE ANGLE (Degree)**	**REMARK**
5150	52.63	54.94	74	-21.37	34.52	9.52	46.35	103	350	Peak
5150	47.82	50.13	54	-6.18	34.52	9.52	46.35	103	350	Average
5230	98.83	100.89	/	/	34.58	9.69	46.33	103	350	Peak
5230	92.85	94.91	/	/	34.58	9.69	46.33	103	350	Average
5350	51.98	53.66	74	-22.02	34.68	9.94	46.3	103	350	Peak
5350	47.21	48.89	54	-6.79	34.68	9.94	46.3	103	350	Average
ANTENNA POLARITY & TEST DISTANCE: VERTICAL AT 3 M										
FREQ. (MHz)	**EMISSION LEVEL (dBuV/m)**	**READ LEVEL (dBuV)**	**LIMIT (dBuV/m)**	**MARGIN (dB)**	**ANTENNA FACTOR (dB /m)**	**CABLE LOSS (dB)**	**PREAMP FACTOR (dB)**	**ANTENNA HEIGHT (cm)**	**TABLE ANGLE (Degree)**	**REMARK**
5150	53.21	55.44	74	-20.79	34.6	9.52	46.35	100	310	Peak
5150	48.17	50.4	54	-5.83	34.6	9.52	46.35	100	310	Average
5230	93.86	95.9	/	/	34.6	9.69	46.33	100	310	Peak
5230	87.35	89.39	/	/	34.6	9.69	46.33	100	310	Average
5350	52.82	54.58	74	-21.18	34.6	9.94	46.3	100	310	Peak
5350	46.98	48.74	54	-7.02	34.6	9.94	46.3	100	310	Average

REMARKS:

1. Emission Level = Read Level+ Antenna Factor + Cable Loss- Preamp Factor
   Margin value = Emission level – Limit value.
2. 5230MHz: Fundamental frequency.