TEST REPORT

Report Number. ..... :	90534-21-72-21-PP021	
Date of issue ..... :	Oct.09.2021	
Tested by (+signature) ..... :	Duke	Duke chen
Approved by (+signature) ..... :	Jason	Jason gao
Testing Laboratory name ..... :	SLG-CPC Testlaboratory Co., Ltd.	
Address ..... :	No. 11, Wu Song Road, Dongcheng District, Dongguan, Guangdong Province, China 523117	
Applicant's name..... :	NANJING MIDAS TECHNOLOGY CO., LTD	
Address ..... :	Block A, Kechuang Building, Lishui District, Nanjing City, Jiangsu Province	
Manufacturer's name ..... :	NANJING MIDAS TECHNOLOGY CO., LTD	
Address ..... :	Block A, Kechuang Building, Lishui District, Nanjing City, Jiangsu Province	
Factory's name ..... :	NANJING MIDAS TECHNOLOGY CO., LTD	
Address ..... :	Block A, Kechuang Building, Lishui District, Nanjing City, Jiangsu Province	
Standard(s) ..... :	FCC 47 CFR Part 2, Subpart J FCC 47 CFR Part 15, Subpart C	
Test item description ..... :	Midas-926 Gateway	
Trade Mark ..... :	Midas	
Model/Type reference ..... :	Midas-926.GB915	
FCC ID ..... :	2A293M926GB915	
Date of receipt of test item ..... :	Sep.07.2021	
Date (s) of performance of test:	Sep.08.2021 to Sep.30.2021	
Summary of Test Results ..... :	**Pass**	

The Summary of Test Results based on a technical opinion belongs to the standard(s).

General disclaimer:

This report shall not be reproduced except in full, without the written approval of SLG-CPC Testlaboratory Co., Ltd. The test results in the report only apply to the tested sample.

Table of Contents

1 EUT TECHNICAL DESCRIPTION 3
2 SUMMARY OF TEST RESULT 4
3 TEST METHODOLOGY 5
3.1 GENERAL DESCRIPTION OF APPLIED STANDARDS 5
3.2 MEASUREMENT EQUIPMENT USED 5
3.3 DESCRIPTION OF TEST MODES 6
4 FACILITIES AND ACCREDITATIONS 7
4.1 FACILITIES 7
4.2 LABORATORY ACCREDITATIONS AND LISTINGS 7
5 TEST SYSTEM UNCERTAINTY 8
6 SETUP OF EQUIPMENT UNDER TEST 9
6.1 RADIO FREQUENCY TEST SETUP 1 9
6.2 RADIO FREQUENCY TEST SETUP 2 9
6.3 CONDUCTED EMISSION TEST SETUP 11
6.4 BLOCK DIAGRAM CONFIGURATION OF TEST SYSTEM 12
6.5 SUPPORT EQUIPMENT 12
7 Frequency Hopping System Requirements 13
7.1 Standard Applicable 13
7.2 EUT Pseudorandom Frequency Hopping Sequence 13
7.3 Equal Hopping Frequency Use 14
7.4 Frequency Hopping System 14
8 TEST REQUIREMENTS 15
8.1 20DB BANDWIDTH 15
8.2 CARRIER FREQUENCY SEPARATION 18
8.3 NUMBER OF HOPPING FREQUENCIES 21
8.4 AVERAGE TIME OF OCCUPANCY (DWELL TIME) 23
8.5 MAXIMUM PEAK CONDUCTED OUTPUT POWER 26
8.6 CONDUCTED SUPRIOUS EMISSION 29
8.7 RADIATED SPURIOUS EMISSION 34
8.8 CONDUCTED EMISSION TEST 39
8.9 ANTENNA APPLICATION 42

1 EUT TECHNICAL DESCRIPTION

Characteristics	Description
Product	Midas-926 Gateway
Model Number	Midas-926.GB915
Modulation:	Lora modulation for 915M
Operating Frequency Range(s):	902.3-914.9MHz
Number of Channels:	64 channels
Transmit Power Max:	21.77 dBm
Antenna Type	External Antenna
Antenna Gain	3 dBi
Power supply	☒DC supply: DC 5V
	☒Adapter supply: Model:AS2401A-0503000US IN PUT:100~240V 50/60Hz 0.8A MAX OUT PUT: 5V 3000mA
Temperature Range:	-20°C ~ +55°C

Note: *for more details, please refer to the User's manual of the EUT.*

2 SUMMARY OF TEST RESULT

FCC Part Clause	Test Parameter	Verdict	Remark
15.247(a)(1)	20 dB Bandwidth	PASS	
15.247(a)(1)	Carrier Frequency Separation	PASS	
15.247(a)(1)	Number of Hopping Frequencies	PASS	
15.247(a)(1)	Average Time of Occupancy (Dwell Time)	PASS	
15.247(b)(1)	Maximum Peak Conducted Output Power	PASS	
15.247(c)	Conducted Spurious Emissions	PASS	
15.247(d) 15.209	Radiated Spurious Emissions	PASS	
15.207	Conducted Emission	PASS	
15.203	Antenna Application	PASS	
15.247 (a) (1)/g/h	Frequency Hopping System	PASS	
NOTE1: N/A (Not Applicable)			

RELATED SUBMITTAL(S) / GRANT(S):

This submittal(s) (test report) is intended for FCC ID: 2A293M926GB915 filing to comply with Section 15.247 of the FCC Part 15, Subpart C Rules.

3 TEST METHODOLOGY

3.1 GENERAL DESCRIPTION OF APPLIED STANDARDS

According to its specifications, the EUT must comply with the requirements of the following standards:
FCC 47 CFR Part 2, Subpart J
FCC 47 CFR Part 15, Subpart C
FCC KDB 558074 D01 15.247 Meas Guidance v05r02

3.2 MEASUREMENT EQUIPMENT USED

Equipment	Model	Manufacturer	S/N	Cal. Due
RF Connected Test				
Vector Signal Generater	Rohde & Schwarz	SMBV100B(6G)	101166	2022/07/30
Analog Signal Generator	Rohde & Schwarz	SMB100A(40G)	181333	2022/07/30
Signal Analyzer	Rohde & Schwarz	FSV40	101527	2022/05/24
Power Analyzer	Rohde & Schwarz	OSP-B157W8	N/A	2022/09/23
Wideband Radio Communication Tester	R&S	CMW270	101985	2022/07/30
Temperature&Humidity test chamber	ESPEC	VC 4018	/	2022/04/02
Wideband Radio Communication Tester	Rohde & Schwarz	CMW500	166898	2022/09/07
Radiated Emission Test				
EMI Test Receiver	KEYSIGHT	N9010A	MY56070465	2021/12/23
EMI Test Receiver	Rohde & Schwarz	FSV40	101511	2022/05/24
Bilog Antenna	Schwarzbeck	VULB 9163	01335	2023/04/28
Power Amplifier	EMEC	EM330	060676	2021/12/23
Cable	Tuyue	F4309	L-400-NmNm-120 00	2021/12/23
Signal Analyzer	Rohde & Schwarz	FSV40	101511	2022/05/24
Horn Antenna	Schwarzbeck	BBHA9170	/	2022/10/09
Power Amplifier	Rohde & Schwarz	SCU-18F	180118	2022/05/17
Active Loop Antenna	ETS LINDGREN	6512	41623	2022/04/26
Test Software	Farad	EZ-EMC	Ver.CPC-3A1	/
Conducted Emission Test				
LISN	Schwarzbeck	NSLK 8127	8127-892	2022-03-19
EMI Test Receiver	R&S	ESR3	102124	2021-12-23
Pulse Limiter	R&S	ESH3-Z2	357.8810.52	2021-12-22
Test Software	Farad	EZ-EMC	Ver.CPC-3A1	/

3.3 DESCRIPTION OF TEST MODES

The EUT has been tested under its typical operating condition.
The EUT configuration for testing is installed on RF field strength measurement to meet the Commissions requirement and operating in a manner which intends to maximize its emission characteristics in a continuous normal application.

The Transmitter was operated in the normal operating mode. The TX frequency was fixed which was for the purpose of the measurements.

Test of channel included the lowest and middle and highest frequency to perform the test, then record on this report.

Those data rates Lora modulation were used for all test.

Pre-defined engineering program for regulatory testing used to control the EUT for staying in continuous transmitting and receiving mode is programmed.

Frequency and Channel list for 915M

Channel	Frequency (MHz)	Channel	Frequency (MHz)	Channel	Frequency (MHz)
1	902.3	33	908.7	…	…
2	902.5	34	908.9	62	914.5
3	902.7	35	909.1	63	914.7
…	…	…	…	64	914.9

Test Frequency and channel for 915M

Lowest Frequency		Middle Frequency		Highest Frequency	
Channel	Frequency (MHz)	Channel	Frequency (MHz)	Channel	Frequency (MHz)
1	902.3	33	908.7	64	914.9

4 FACILITIES AND ACCREDITATIONS

4.1 FACILITIES

All measurement facilities used to collect the measurement data are located at

No. 11, Wu Song Road, Dongcheng District, Dongguan, Guangdong Province, China 523117
The sites are constructed in conformance with the requirements of ANSI C63.7, ANSI C63.10 and CISPR Publication 22.

4.2 LABORATORY ACCREDITATIONS AND LISTINGS

Site Description

EMC Lab.	:	Accredited by A2LA The Certificate Number is 6325.01.
Name of Firm	:	SLG-CPC Testlaboratory Co., Ltd.
Site Location	:	No. 11, Wu Song Road, Dongcheng District, Dongguan, Guangdong Province, China 523117

5 TEST SYSTEM UNCERTAINTY

The following measurement uncertainty levels have been estimated for tests performed on the apparatus:

Parameter	Uncertainty
Radio Frequency	±1x10^-5
Maximum Peak Output Power Test	±1.0dB
Conducted Emissions Test	±2.0dB
Radiated Emission Test	±2.0dB
Occupied Bandwidth Test	±1.0%
Band Edge Test	±3dB
All emission, radiated	±3dB
Antenna Port Emission	±3dB
Temperature	±0.5℃
Humidity	±3%

Measurement Uncertainty for a level of Confidence of 95%

6 SETUP OF EQUIPMENT UNDER TEST

6.1 RADIO FREQUENCY TEST SETUP 1

The 915M component's antenna ports(s) of the EUT are connected to the measurement instrument per an appropriate attenuator. The EUT is controlled by PC/software to emit the specified signals for the purpose of measurements.

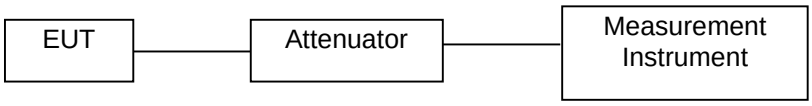

6.2 RADIO FREQUENCY TEST SETUP 2

The test site semi-anechoic chamber has met the requirement of NSA tolerance 4 dB according to the standards: ANSI C63.10. The test distance is 3m.The setup is according to the requirements in Section 13.1.4.1 of ANSI C63.10-2013 and CAN/CSA-CEI/IEC CISPR 22.

Below 30MHz：

The EUT is placed on a turntable 0.8meters above the ground in the chamber, 3 meter away from the antenna (loop antenna). The Antenna should be positioned with its plane vertical at the specified distance from the EUT and rotated about its vertical axis for maximum response at each azimuth about the EUT. The center of the loop shall be 1 m above the ground. For certain applications, the loop antenna plane may also need to be positioned horizontally at the specified distance from the EUT.

Above 30MHz：

The EUT is placed on a turntable 0.8meters above the ground in the chamber, 3 meter away from the antenna. The maximal emission value is acquired by adjusting the antenna height, polarisation and turntable azimuth. Normally, the height range of antenna is 1 m to 4 m, the azimuth range of turntable is 0° to 360°, and the receive antenna has two polarizations Vertical (V) and Horizontal (H).

Above 1GHz:

(Note: the FCC's permission to use 1.5m as an alternative per TCBC Conf call of Dec. 2, 2014.)

The EUT is placed on a turntable 1.5 meters above the ground in the chamber, 3 meter away from the antenna. The maximal emission value is acquired by adjusting the antenna height, polarisation and turntable azimuth. Normally, the height range of antenna is 1 m to 4 m, the azimuth range of turntable is 0° to 360°, and the receive antenna has two polarizations Vertical (V) and Horizontal (H).

(a) Radiated Emission Test Set-Up, Frequency Below 30MHz

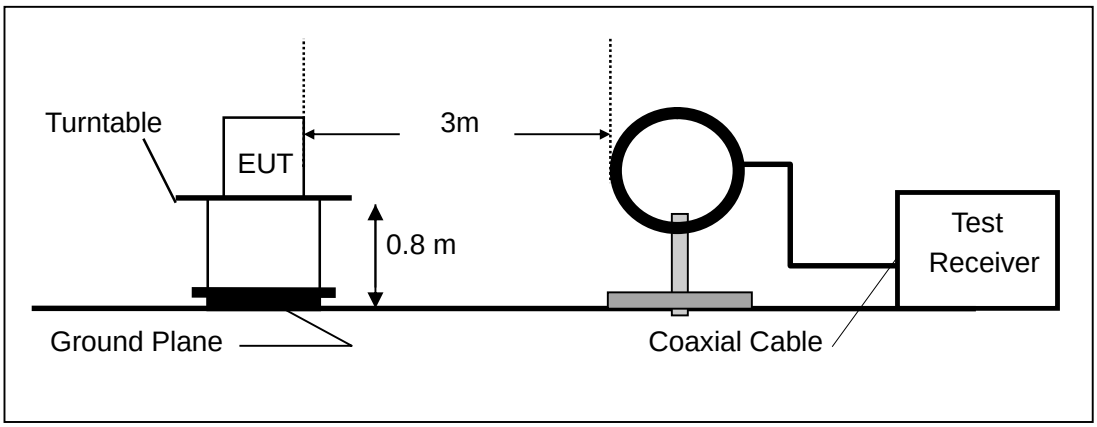

(b) Radiated Emission Test Set-Up, Frequency Below 1000MHz

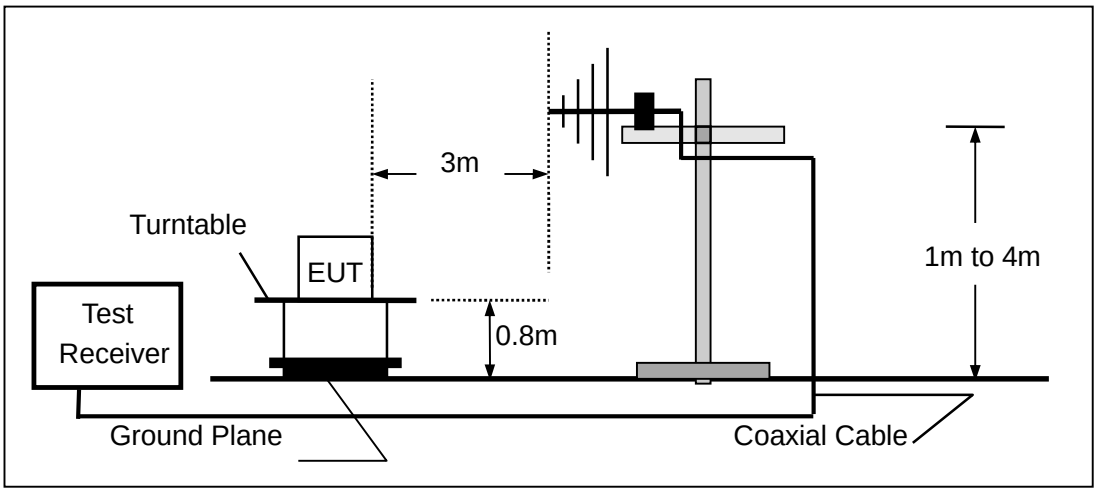

(c) Radiated Emission Test Set-Up, Frequency above 1000MHz

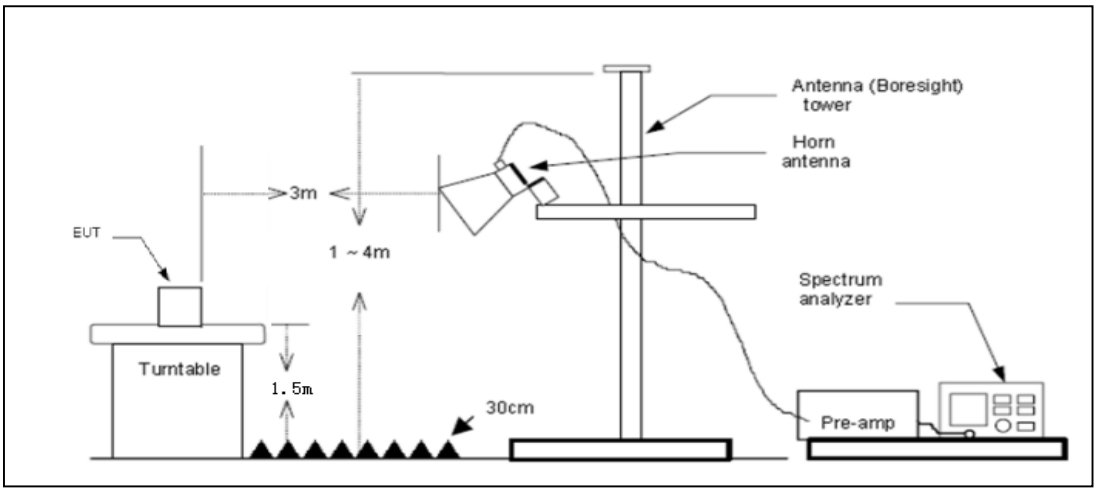

6.3 CONDUCTED EMISSION TEST SETUP

The mains cable of the EUT (Perfect Share Mini) must be connected to LISN. The LISN shall be placed 0.8m from the boundary of EUT and bonded to a ground reference plane for LISN mounted on top of the ground reference plane. This distance is between the closest points of the LISN and the EUT. All other units of the EUT and associated equipment shall be at least 0.8m from the LISN.

Ground connections, where required for safety purposes, shall be connected to the reference ground point of the LISN and, where not otherwise provided or specified by the manufacturer, shall be of same length as the mains cable and run parallel to the mains connection at a separation distance of not more than 0.8m.

According to the requirements in Section 13.1.4.1 of ANSI C63.10-2013 Conducted emissions from the EUT measured in the frequency range between 0.15 MHz and 30 MHz using CISPR Quasi-Peak and average detector mode.

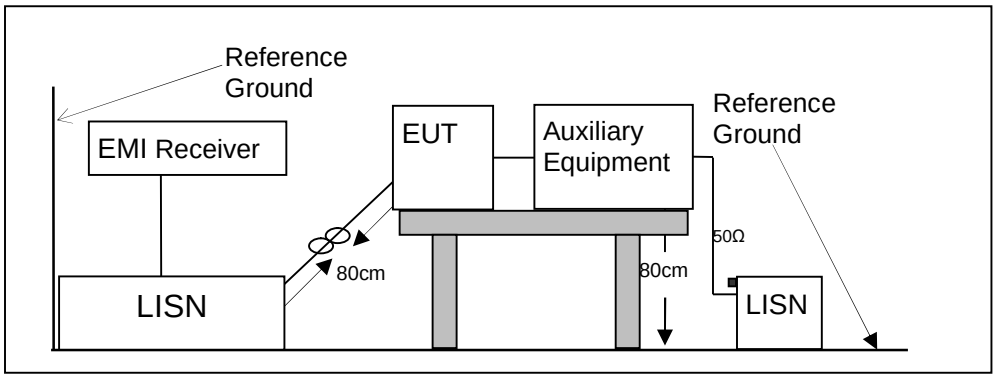

6.4 BLOCK DIAGRAM CONFIGURATION OF TEST SYSTEM

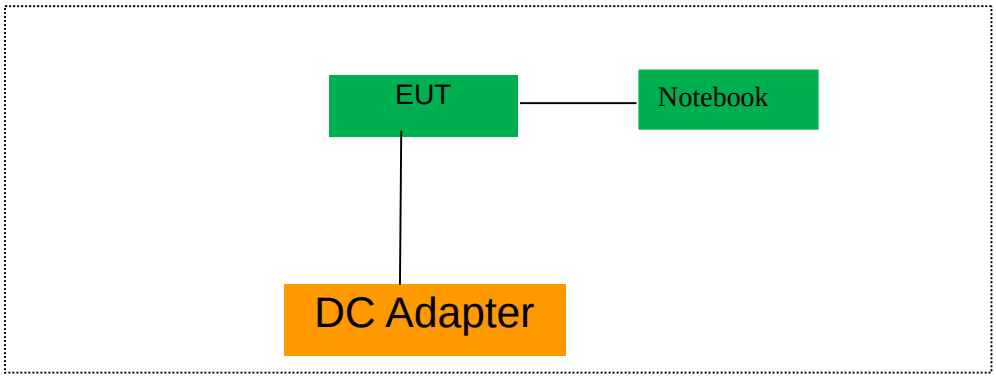

6.5 SUPPORT EQUIPMENT

EUT Cable List and Details			
Cable Description	Length (m)	Shielded/Unshielded	With / Without Ferrite
DC cable	1.0	Unshielded	Without Ferrite

Auxiliary Cable List and Details			
Cable Description	Length (m)	Shielded/Unshielded	With / Without Ferrite

Auxiliary Equipment List and Details			
Description	Manufacturer	Model	Serial Number
Notebook	Lenovo	MPNXB1505007	MP1XHYV7

Notes:

1. *All the equipment/cables were placed in the worst-case configuration to maximize the emission during the test.*
2. *Grounding was established in accordance with the manufacturer's requirements and conditions for the intended use.*

7 FREQUENCY HOPPING SYSTEM REQUIREMENTS

7.1 Standard Applicable

According to FCC Part 15.247(a)(1), The system shall hop to channel frequencies that are selected at the system hopping rate from a pseudo randomly ordered list of hopping frequencies. Each frequency must be used equally on the average by each transmitter. The system receivers shall have input bandwidths that match the hopping channel bandwidths of their corresponding transmitters and shall shift frequencies in synchronization with the transmitted signals.

(g) Frequency hopping spread spectrum systems are not required to employ all available hopping channels during each transmission. However, the system, consisting of both the transmitter and the receiver, must be designed to comply with all of the regulations in this section should the transmitter be presented with a continuous data (or information) stream. In addition, a system employing short transmission bursts must comply with the definition of a frequency hopping system and must distribute its transmissions over the minimum number of hopping channels specified in this section.

(h) The incorporation of intelligence within a frequency hopping spread spectrum system that permits the system to recognize other users within the spectrum band so that it individually and independently chooses and adapts its hopsets to avoid hopping on occupied channels is permitted. The coordination of frequency hopping systems in any other manner for the express purpose of avoiding the simultaneous occupancy of individual hopping frequencies by multiple transmitters is not permitted.

7.2 EUT Pseudorandom Frequency Hopping Sequence

The channel is represented by a pseudo-random hopping sequence hopping through the 79 RF channels.
The hopping sequence is unique for the piconet and is determined by the device address of the master; the phase in the hopping sequence is determined by the clock of the master.The channel is divide into time slots where each slot corresponds to an RF hop frequency. Consecutive hops correspond to different RF hop frequencies. The normal hop is 1 600 hops/s.

The pseudorandom sequence may be generated in a nine-stage shift register whose 5th and 9th stage outputs are added in a modulo-two addition stage, and the result is fed back to the input of the first stage. The sequence begins with the first ONE of 9 consecutive ONEs; i.e. the shift register is initialized with nine ones. Number of shift register stages: 9
Length of pseudo-random sequence: 29-1 = 511 bits
Longest sequence of zeros: 8 (non-inverted signal)

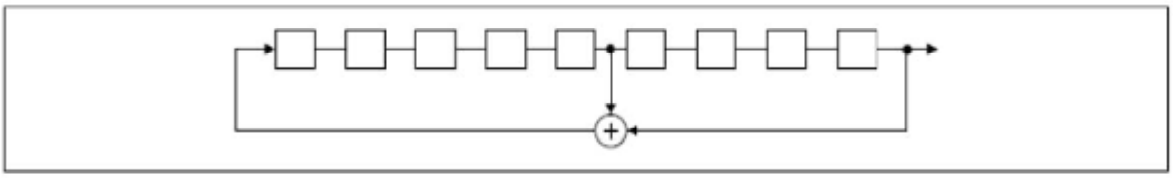

Linear Feedback Shift Register for Generation of the PRBS sequence

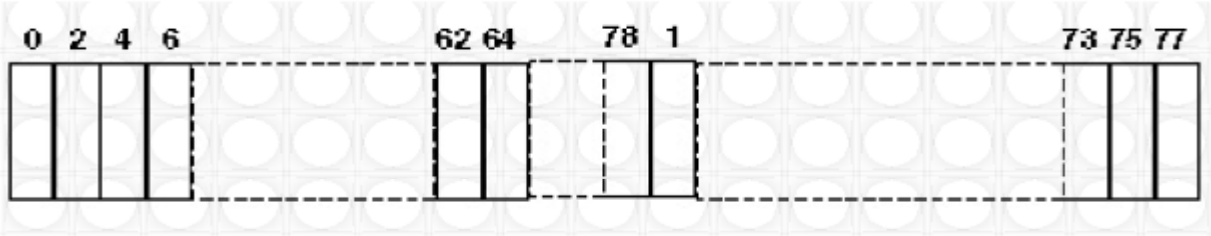

Each frequency used equally on the average by each transmitter.
The system receiver have input bandwidths that match the hopping channel bandwidths of their corresponding transmitters and shift frequencies in synchronization with the transmitted signals.

7.3 Equal Hopping Frequency Use

All frequency units participating in the piconet are time and hop-synchronized to the channel.

Example of a 64 hopping sequence in data mode:
35, 27, 6, 44, 14, 61, 32, 1, 11, 23, 2, 55, 29, 3, 9, 52, 58, 40, 25, 7, 18, 26, 60, 47, 50, 2, 5, 16, 37, 63, 54, 20, 13, 4, 8, 15, 21, 26, 10, 43, 24, 57, 39, 46, 48, 33, 17, 31, 75, 19, 41, 62, 28, 51, 66, 30, 56, 34, 59, 22, 49, 64, 38, 45, 36, 42, 53
Each Frequency used equally on the average by each transmitter

7.4 Frequency Hopping System

This transmitter device is frequency hopping device, and complies with FCC part 15.247 rule.

This device uses 915M radio which operates in 902-928 MHz band. 915M uses a radio technology called frequency-hopping spread spectrum, which chops up the data being sent and transmits chunks of it on up to 64 bands in the range 902-928 MHz. The transmitter switches hop frequencies 1,600 times per second to assure a high degree of data security. All 915M devices participating in a given piconet are synchronized to the frequency-hopping channel for the piconet. The frequency hopping sequence is determined by the master's device address and the phase of the hopping sequence (the frequency to hop at a specific time) is determined by the master's internal clock. Therefore, all slaves in a piconet must know the master's device address and must synchronize their clocks with the master's clock.

8 TEST REQUIREMENTS

8.1 20DB BANDWIDTH

8.1.1 Applicable Standard

According to FCC Part 15.247(a)(1) and KDB 558074 D01 15.247 MEAS GUIDANCE v05r02

8.1.2 Conformance Limit

No limit requirement.

8.1.3 Test Configuration

Test according to clause 6.1 radio frequency test setup 1

8.1.4 Test Procedure

The EUT was operating in 915M mode and controlled its channel. Printed out the test result from the spectrum by hard copy function.
The RF output of EUT was connected to the spectrum analyzer by RF cable and attenuator. The path loss was compensated to the results for each measurement.
Set to the maximum power setting and enable the EUT transmit continuously
Set RBW = 30 kHz.
Set the video bandwidth (VBW) =100 kHz.
Set Span= approximately 2 to 3 times the 20 dB bandwidth
Set Detector = Peak.
Set Trace mode = max hold.
Set Sweep = auto couple.
The EUT should be transmitting at its maximum data rate. Allow the trace to stabilize. Use the marker-to-peak function to set the marker to the peak of the emission. Use the marker-delta function to measure 20 dB down one side of the emission. Reset the markerdelta function, and move the marker to the other side of the emission, until it is (as close as possible to) even with the reference marker level. The marker-delta reading at this point is the 20 dB bandwidth of the emission.
If this value varies with different modes of operation (e.g., data rate, modulation format, etc.), repeat this test for each variation.
Measure and record the results in the test report.

Test Results

Temperature:	26° C
Relative Humidity:	54%
ATM Pressure:	1011 mbar

Modulation Mode	Channel Number	Channel Frequency (MHz)	Measurement Bandwidth (kHz)	Limit (kHz)	Verdict
Lora	1	902.3	215.8	<500	PASS
	33	908.7	204.6	<500	PASS
	64	914.9	201.6	<500	PASS

Test Model	20dB Bandwidth 915M Channel 1: 902.3MHz Lora Modulation

Test Model	20dB Bandwidth 915M Channel 33: 908.7MHz Lora Modulation

Test Model	20dB Bandwidth 915M Channel 64: 914.9MHz	Lora Modulation

8.2 CARRIER FREQUENCY SEPARATION

8.2.1 Applicable Standard

According to FCC Part 15.247(a)(1) and KDB 558074 D01 15.247 MEAS GUIDANCE v05r02

8.2.2 Conformance Limit

Frequency hopping systems operating in the 902-928MHz band shall have hopping channel carrier frequencies separated by a minimum of 25kHz or the 20dB bandwidth of the hopping channel, whichever is greater.
In case of an output power less than 125mW, the frequency hopping system may have channels separated by a minimum of 25kHz or two-thirds of the 20dB bandwidth of the hopping channel, whichever is greater.

8.2.3 Test Configuration

Test according to clause 6.1 radio frequency test setup 1

8.2.4 Test Procedure

n According to FCC Part15.247(a)(1)
The EUT must have its hopping function enabled. Use the following spectrum analyzer settings:
Set the RBW =100kHz. Set VBW =300kHz.
Set the span = wide enough to capture the peaks of two adjacent channels
Set Sweep time = auto couple.
Set Detector = peak. Set Trace mode = max hold.
Allow the trace to stabilize. Use the marker-delta function to determine the separation between the peaks of the adjacent channels. The limit is specified in one of the subparagraphs of this Section. Submit this plot.

Test Results

Temperature:	26° C
Relative Humidity:	54%
ATM Pressure:	1011 mbar

Modulation Mode	Channel Number	Channel Frequency (MHz)	Measurement Bandwidth (kHz)	Limit (kHz)	Verdict
Lora	1	902.3	241	>216	PASS
	33	908.7	211	>205	PASS
	64	914.9	212	>202	PASS
Note: Limit = 20dB bandwidth					

Test Model	Carrier Frequency Separation 915M Channel 1: 902.3MHz Lora Modulation

Test Model	Carrier Frequency Separation 915M Channel 33: 908.7MHz Lora Modulation

Test Model	Carrier Frequency Separation 915M Channel 64: 914.9MHz	Lora Modulation

8.3 NUMBER OF HOPPING FREQUENCIES

8.3.1 Applicable Standard

According to FCC Part 15.247(a)(1) (i)and KDB 558074 D01 15.247 MEAS GUIDANCE v05r02

8.3.2 Conformance Limit

Frequency hopping systems operating in the 902-928MHz band shall use at least 50 channels.

8.3.3 Test Configuration

Test according to clause 6.1 radio frequency test setup 1

8.3.4 Test Procedure

n According to FCC Part15.247(a)(1)(i)
The EUT must have its hopping function enabled. Use the following spectrum analyzer settings:
Span = the frequency band of operation (902-928MHz)
RBW ⩾ 100KHz
VBW ⩾ RBW
Sweep = auto
Detector function = peak
Trace = max hold
Allow the trace to stabilize. It may prove necessary to break the span up to sections, in order to clearly show all of the hopping frequencies.

Test Results

Temperature:	26° C
Relative Humidity:	54%
ATM Pressure:	1011 mbar

Modulation Mode	Hopping Channel Frequency Range	Quantity of Hopping Channel	Quantity of Hopping Channel limit
Lora	902.3-914.9	64	＞50

Test Model	Number Of Hopping Frequencies 915M Span: 902-928MHz

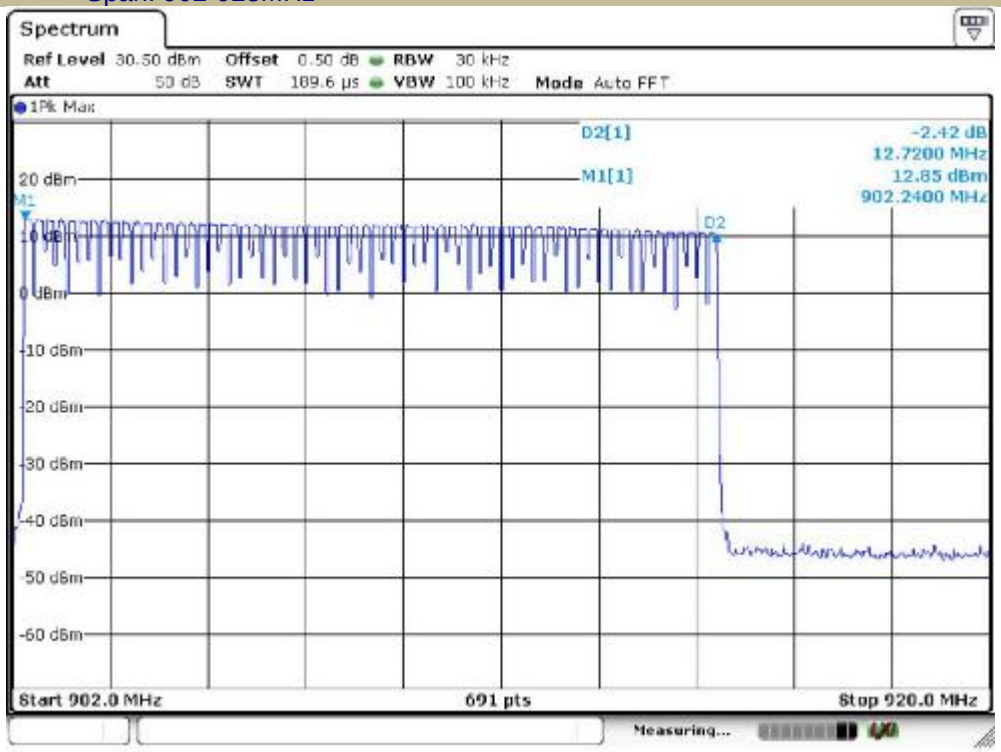

8.4 AVERAGE TIME OF OCCUPANCY (DWELL TIME)

8.4.1 Applicable Standard

According to FCC Part 15.247(a)(1)(i) and KDB 558074 D01 15.247 MEAS GUIDANCE v05r02

8.4.2 Conformance Limit

For frequency hopping systems operating in the 902-928MHz band, the average time of occupancy on any channel shall not be greater than 0.4s within a period of 0.4s multiplied by the number of hopping channels employed.

8.4.3 Test Configuration

Test according to clause 6.1 radio frequency test setup 1

8.4.4 Test Procedure

n According to FCC Part15.247(a)(1)(i)
The EUT must have its hopping function enabled. Use the following spectrum analyzer settings:
Span = zero span, centered on a hopping channel
RBW = 1 MHz
VBW ⩾ RBW
Sweep = as necessary to capture the entire dwell time per hopping channel
Detector function = peak
Trace = max hold
If possible, use the marker-delta function to determine the dwell time. If this value varies with different modes of operation (e.g., data rate, modulation format, etc.), repeat this test for each variation. The limit is specified in one of the subparagraphs of this Section.

8.4.5 Test Results

Temperature:	26° C
Relative Humidity:	54%
ATM Pressure:	1011 mbar

915M (Lora,) mode have been tested:

Dwell Time = 36.167ms
Total bins in 20 s =4 Max.
Allowed time = 0.4s
Total time occupancy in 20s = 36.167 * 4 = 144.67ms (which is less than 400ms)

Test Model	Average Time Of Occupancy (Dwell Time) 915M CH 1: 902.3MHz	Lora

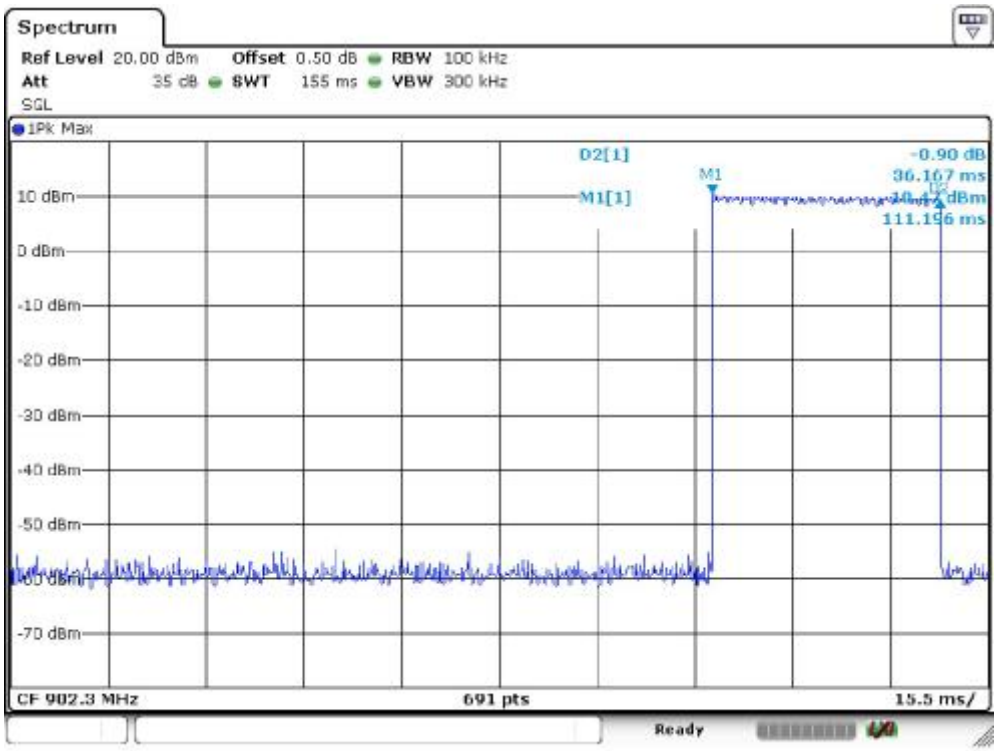

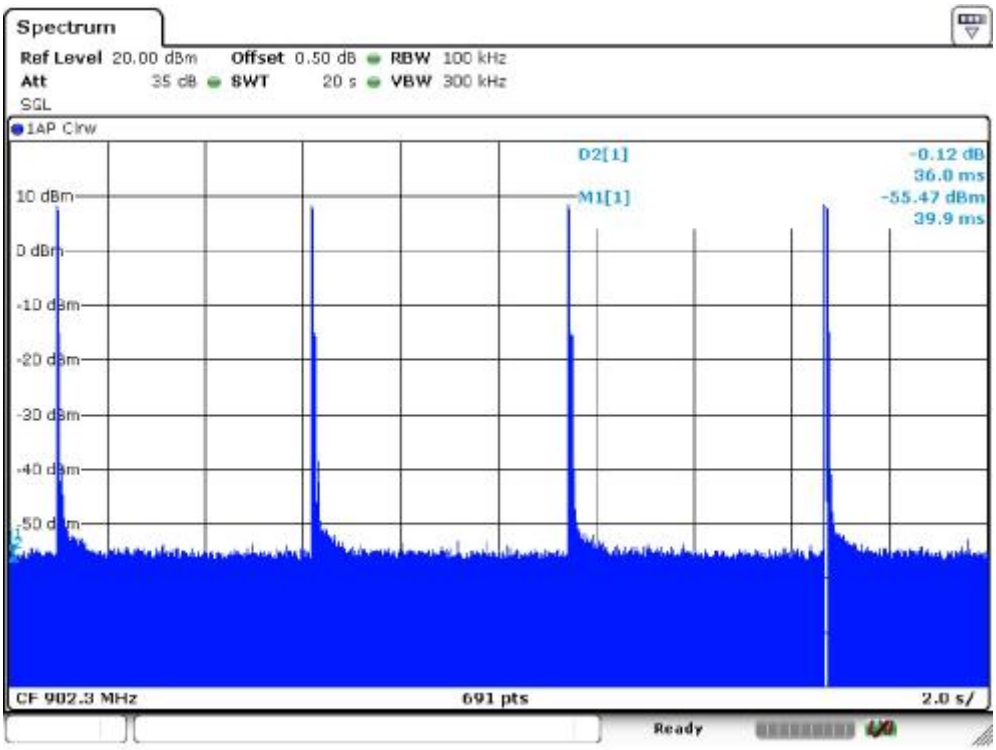

8.5 MAXIMUM PEAK CONDUCTED OUTPUT POWER

8.5.1 Applicable Standard

According to FCC Part 15.247(b)(2) and KDB 558074 D01 15.247 MEAS GUIDANCE v05r02

8.5.2 Conformance Limit

The max For frequency hopping systems operating in the 902-928 MHz band employing at least 75 non-overlapping hopping channels: 1 watt. For all other frequency hopping systems in the 902-928 MHz band: 0.125 watts.

8.5.3 Test Configuration

Test according to clause 6.1 radio frequency test setup 1

8.5.4 Test Procedure

n According to FCC Part15.247(b)(2)
As an alternative to a peak power measurement, compliance with the limit can be based on a measurement of the maximum conducted output power.
Use the following spectrum analyzer settings:
Set Span = approximately 5 times the 20 dB bandwidth, centered on a hopping channel
Set RBW > the 20 dB bandwidth of the emission being measured
Set VBW ³ RBW
Set Sweep = auto
Set Detector function = peak
Set Trace = max hold
Allow the trace to stabilize. Use the marker-to-peak function to set the marker to the peak of the emission to determine the peak amplitude level.

Test Results

Temperature:	26° C
Relative Humidity:	54%
ATM Pressure:	1011 mbar

Operation Mode	Channel Number	Channel Frequency (MHz)	Measurement Level (dBm)	Limit (dBm)	Verdict
Lora	1	902.3	21.44	30	PASS
	33	908.7	21.77	30	PASS
	64	914.9	21.20	30	PASS
Note: N/A					

Test Model	Maximum Peak Conducted Output Power 915M Channel 1: 902.3MHz Lora

Test Model	Maximum Peak Conducted Output Power 915M Channel 33: 908.7MHz Lora

	Maximum Peak Conducted Output Power	
Test Model	915M	
	Channel 64: 914.9MHz	Lora

8.6 CONDUCTED SUPRIOUS EMISSION

8.6.1 Applicable Standard

According to FCC Part 15.247(d) and KDB 558074 D01 15.247 MEAS GUIDANCE v05r02

8.6.2 Conformance Limit

According to FCC Part 15.247(d):
In any 100 kHz bandwidth outside the frequency band in which the spread spectrum intentional radiator is operating, the radio frequency power that is produced by the intentional radiator shall be at least 20 dB below that in the 100 kHz bandwidth within the band that contains the highest level of the desired power, based on either an RF conducted, provided the transmitter demonstrates compliance with the peak conducted power limits.

8.6.3 Test Configuration

Test according to clause 6.1 radio frequency test setup 1

8.6.4 Test Procedure

The transmitter output (antenna port) was connected to the spectrum analyzer

- **Reference level measurement**

Establish a reference level by using the following procedure:
Set instrument center frequency to DSS channel center frequency.
Set Span = approximately 5 times the 20 dB bandwidth, centered on a hopping channel.
Set the RBW = 100 kHz. Set the VBW ≥ 3 x RBW.
Set Detector = peak. Set Sweep time = auto couple.
Set Trace mode = max hold. Allow trace to fully stabilize.
Use the peak marker function to determine the maximum Maximum conduceted level.
Note that the channel found to contain the maximum conduceted level can be used to establish the reference level.

- **Band-edge Compliance of RF Conducted Emissions**

Use the following spectrum analyzer settings:
Span = wide enough to capture the peak level of the emission operating on the channel closest to the band-edge, as well as any modulation products which fall outside of the authorized band of operation
Set RBW ³ 1% of the span=100kHz Set VBW ³ RBW
Set Sweep = auto Set Detector function = peak Set Trace = max hold
Allow the trace to stabilize. Set the marker on the emission at the bandedge, or on the highest modulation product outside of the band, if this level is greater than that at the bandedge. Enable the marker-delta function, then use the marker-to-peak function to move the marker to the peak of the in-band emission. The marker-delta value now displayed must comply with the limit specified in this Section.
Now, using the same instrument settings, enable the hopping function of the EUT. Allow the trace to stabilize. Follow the same procedure listed above to determine if any spurious emissions caused by the hopping function also comply with the specified limit.

- **Conduceted Spurious RF Conducted Emission**

Use the following spectrum analyzer settings:
Span = wide enough to capture the peak level of the in-band emission and all spurious emissions (e.g., harmonics) from the lowest frequency generated in the EUT up through the 10th harmonic.(30MHz to 25GHz). Set RBW = 100 kHz Set VBW ³ RBW
Set Sweep = auto Set Detector function = peak Set Trace = max hold
Allow the trace to stabilize. Set the marker on the peak of any spurious emission recorded. The level displayed must comply with the limit specified in this Section.

8.6.5 Test Results

All mode have been tested, and the worst result was report as below:

Test Model	Maximum Conduceted Level RBW=100kHz 915M Channel 1: 902.3MHz Lora

Test Model	Conduceted Spurious RF Conducted Emission 915M Channel 1: 902.3MHz Lora

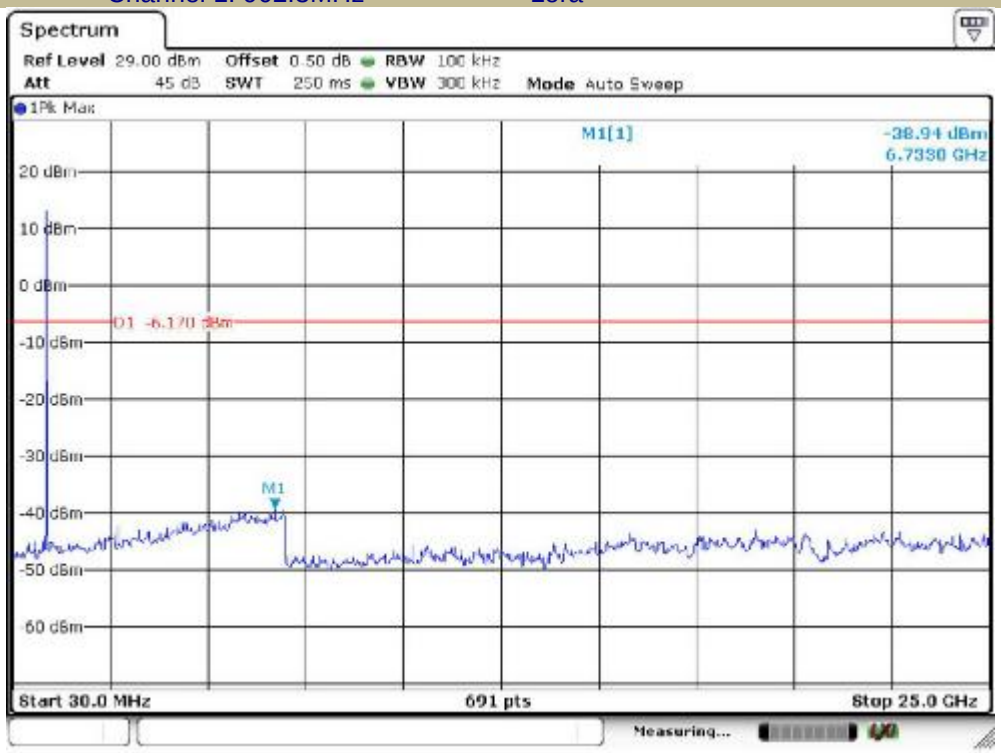

Test Model	Band-edge Conducted Emissions 915M Channel 1: 902.3MHz Lora

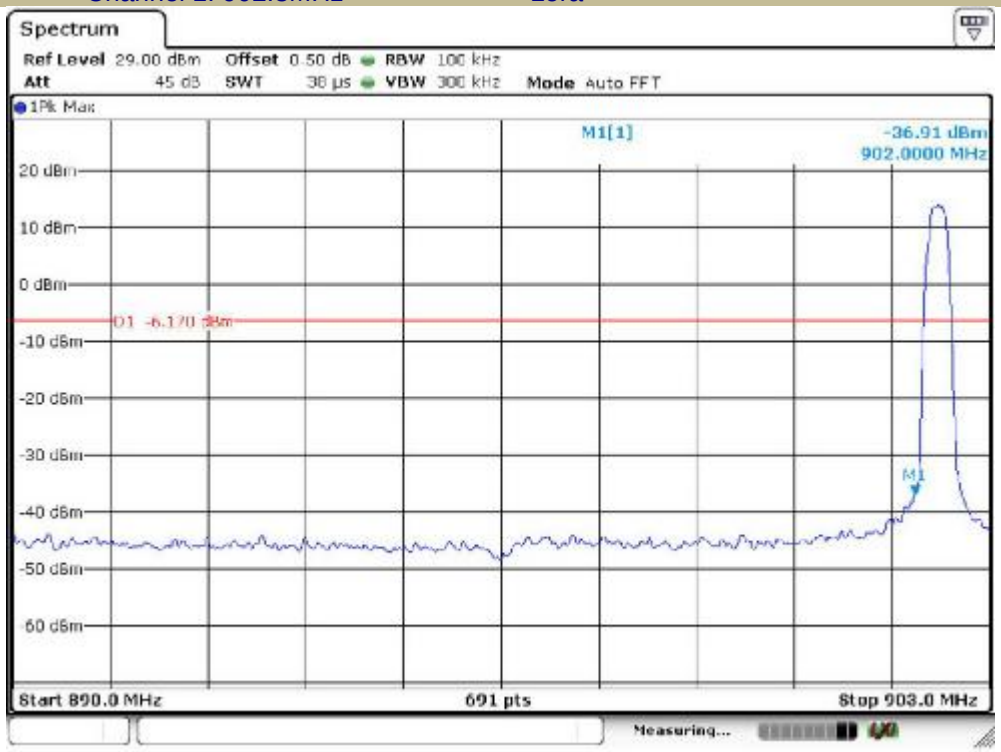

Test Model	Maximum Conduceted Level RBW=100kHz 915M Channel 33: 908.7MHz Lora

Test Model	Conducted Spurious RF Conducted Emission 915M Channel 33: 908.7MHz Lora

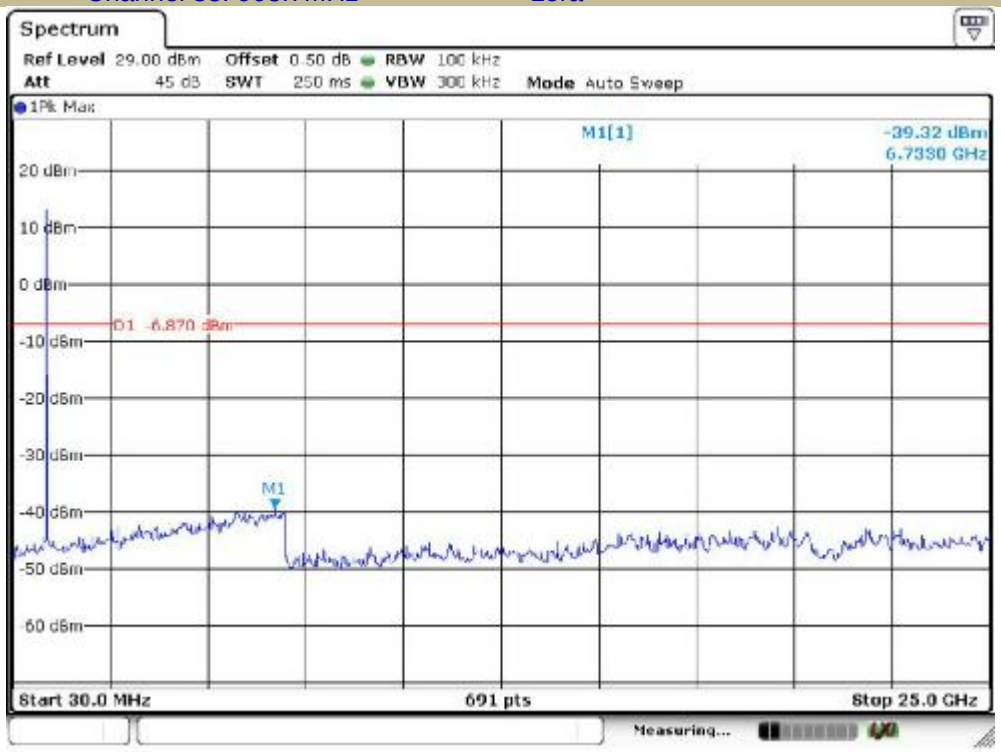

Test Model	Maximum Conducted Level RBW=100kHz 915M Channel 64: 914.9MHz Lora

Test Model	Conduceted Spurious RF Conducted Emission 915M Channel 64: 914.9MHz Lora

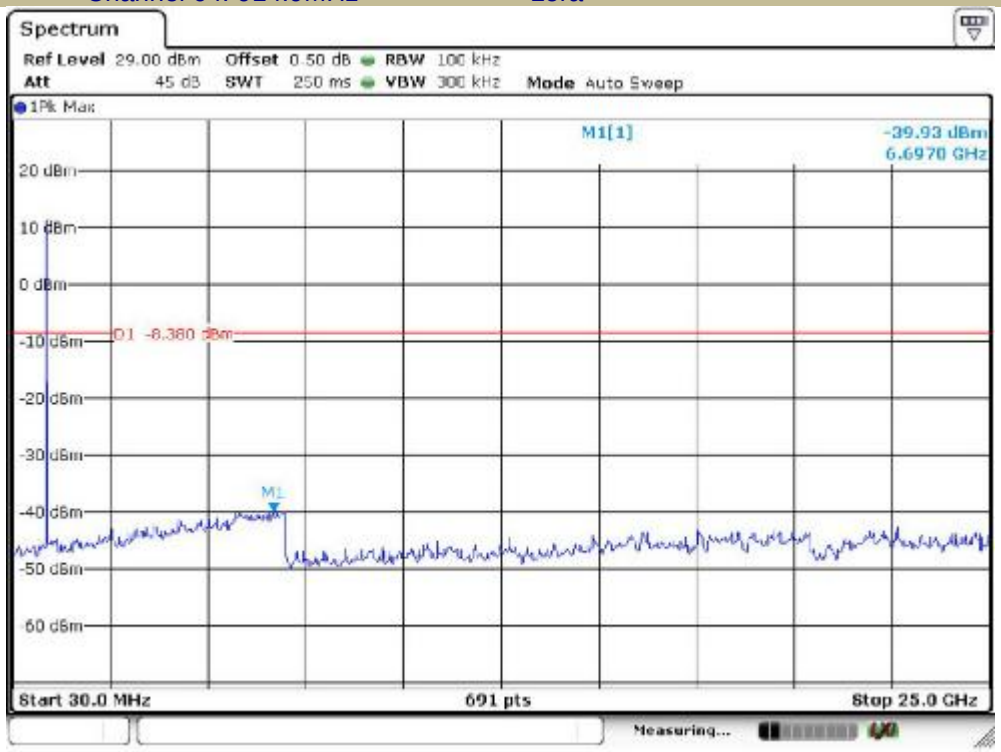

Test Model	Band-edge Conducted Emissions 915M Channel 64: 914.9MHz Lora

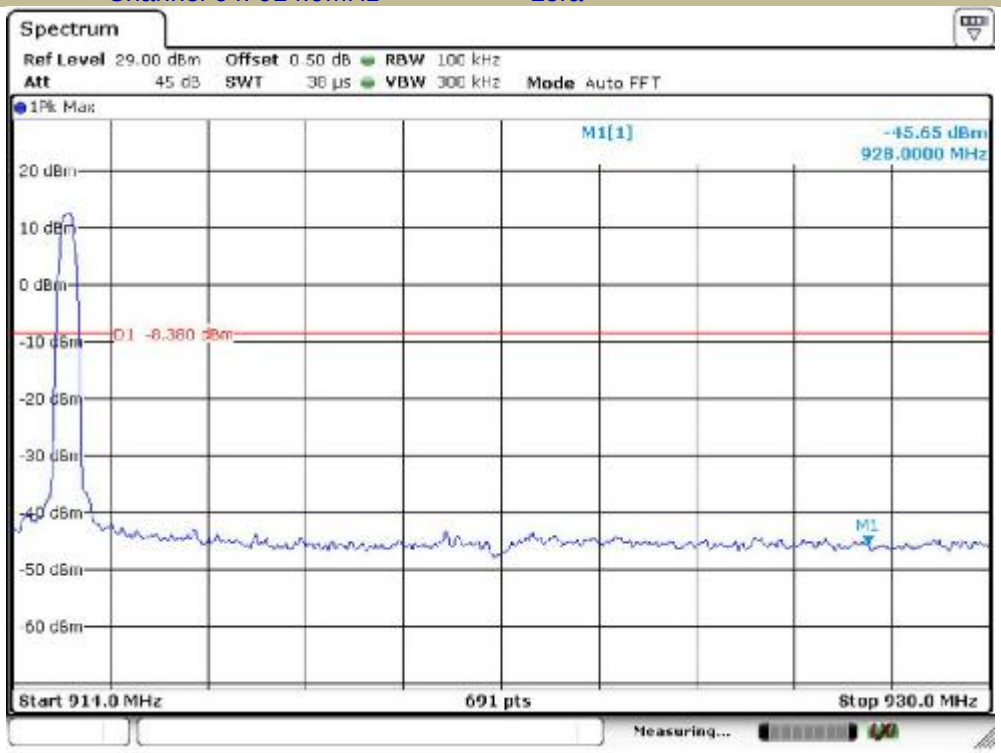

8.7 RADIATED SPURIOUS EMISSION

8.7.1 Applicable Standard

According to FCC Part 15.247(d) and 15.209 and KDB 558074 D01 15.247 MEAS GUIDANCE v05r02

8.7.2 Conformance Limit

According to FCC Part 15.247(d): radiated emissions which fall in the restricted bands, as defined in §15.205(a), must also comply with the radiated emission limits specified in §15.209(a) (see §15.205(c)).
According to FCC Part15.205, Restricted bands

MHz	MHz	MHz	GHz
0.090-0.110	16.42-16.423	399.9-410	4.5-5.15
10.495-0.505	16.69475-16.69525	608-614	5.35-5.46
2.1735-2.1905	16.80425-16.80475	960-1240	7.25-7.75
4.125-4.128	25.5-25.67	1300-1427	8.025-8.5
4.17725-4.17775	37.5-38.25	1435-1626.5	9.0-9.2
4.20725-4.20775	73-74.6	1645.5-1646.5	9.3-9.5
6.215-6.218	74.8-75.2	1660-1710	10.6-12.7
6.26775-6.26825	123-138	2200-2300	14.47-14.5
8.291-8.294	149.9-150.05	2310-2390	15.35-16.2
8.362-8.366	156.52475-156.52525	2483.5-2500	17.7-21.4
8.37625-8.38675	156.7-156.9	2690-2900	22.01-23.12
8.41425-8.41475	162.0125-167.17	3260-3267	23.6-24.0
12.29-12.293	167.72-173.2	3332-3339	31.2-31.8
12.51975-12.52025	240-285	3345.8-3358	36.43-36.5
12.57675-12.57725	322-335.4	3600-4400	(2)
13.36-13.41			

According to FCC Part15.205, the level of any transmitter spurious emission in Restricted bands shall not exceed the level of the emission specified in the following table

Restricted Frequency(MHz)	Field Strength (μV/m)	Field Strength (dBμV/m)	Measurement Distance
0.009-0.490	2400/F(KHz)	20 log (uV/m)	300
0.490-1.705	24000/F(KHz)	20 log (uV/m)	30
1.705-30	30	29.5	30
30-88	100	40	3
88-216	150	43.5	3
216-960	200	46	3
Above 960	500	54	3

8.7.3 Test Configuration

Test according to clause 7.2 radio frequency test setup 2

8.7.4 Test Procedure

This test is required for any spurious emission that falls in a Restricted Band, as defined in Section 15.205. It must be performed with the highest gain of each type of antenna proposed for use with the EUT. Use the following spectrum analyzer settings:
For Above 1GHz:
The EUT was placed on a turn table which is 1.5m above ground plane.
Maximum procedure was performed on the highest emissions to ensure EUT compliance.
Span = wide enough to fully capture the emission being measured
RBW = 1 MHz
VBW ³ RBW
Sweep = auto
Detector function = peak

Trace = max hold
For Below 1GHz:
The EUT was placed on a turn table which is 0.8m above ground plane.
Maximum procedure was performed on the highest emissions to ensure EUT compliance.
Span = wide enough to fully capture the emission being measured
RBW = 100 kHz for
VBW ³ RBW
Sweep = auto
Detector function = peak
Trace = max hold
For Below 30MHz:
The EUT was placed on a turn table which is 0.8m above ground plane.
Maximum procedure was performed on the highest emissions to ensure EUT compliance.
Span = wide enough to fully capture the emission being measured
RBW = 9kHz
VBW ³ RBW
Sweep = auto
Detector function = peak
Trace = max hold
For Below 150KHz:
The EUT was placed on a turn table which is 0.8m above ground plane.
Maximum procedure was performed on the highest emissions to ensure EUT compliance.
Span = wide enough to fully capture the emission being measured
RBW = 200Hz
VBW ³ RBW
Sweep = auto
Detector function = peak
Trace = max hold
Follow the guidelines in ANSI C63.10-2013 with respect to maximizing the emission by rotating the EUT, measuring the emission while the EUT is situated in three orthogonal planes (if appropriate), adjusting the measurement antenna height and polarization, etc. A pre-amp and a high pass filter are required for this test, in order to provide the measuring system with sufficient sensitivity. Allow the trace to stabilize. The peak reading of the emission, after being corrected by the antenna factor, cable loss, pre-amp gain, etc., is the peak field strength, which must comply with the limit specified in Section 15.35(b). Submit this data.
Now set the VBW to 10 Hz, while maintaining all of the other instrument settings. This peak level, once corrected, must comply with the limit specified in Section 15.209. If the dwell time per channel of the hopping signal is less than 100 ms, then the reading obtained with the 10 Hz VBW may be further adjusted by a “duty cycle correction factor”, derived from 20log(dwell time/100 ms), in an effort to demonstrate compliance with the 15.209 limit. Submit this data.
Repeat above procedures until all frequency measured was complete.

8.7.5 Test Results

n Spurious Emission below 30MHz (9KHz to 30MHz)

Temperature:	26° C
Relative Humidity:	54%
ATM Pressure:	1011 mbar

Freq. (MHz)	Ant.Pol.	Emission Level(dBuV/m)		Limit 3m(dBuV/m)		Over(dB)	
	H/V	PK	AV	PK	AV	PK	AV
--	--	--	--	--	--	--	--

Note: the amplitude of spurious emission that is attenuated by more than 20dB below the permissible limit has no need to be reported.
Distance extrapolation factor =40log(Specific distance/ test distance)(dB);
Limit line=Specific limits(dBuV) + distance extrapolation factor

n Spurious Emission Above 1GHz (1GHz to 25GHz)

All mode have been tested, and the worst result was report as below:

Test mode: Lora Frequency: Channel 1: 902.3MHz

Freq. (MHz)	Ant.Pol. H/V	Emission Level(dBuV/m)		Limit 3m(dBuV/m)		Over(dB)	
		PK	AV	PK	AV	PK	AV
1805.47	V	60.96	43.15	74	54	-13.04	-10.85
3614.19	V	59.82	48.71	74	54	-14.18	-5.29
4369.53	V	58.96	41.77	74	54	-15.04	-12.23
1807.15	H	62.37	41.83	74	54	-11.63	-12.17
3615.35	H	59.27	45.73	74	54	-14.73	-8.27
4835.81	H	56.64	41.01	74	54	-17.36	-12.99

Test mode: Lora Frequency: Channel 33: 908.7MHz

Freq. (MHz)	Ant.Pol. H/V	Emission Level(dBuV/m)		Limit 3m(dBuV/m)		Over(dB)	
		PK	AV	PK	AV	PK	AV
1820.96	V	62.27	43.65	74	54	-11.73	-10.35
3643.02	V	62.56	41.24	74	54	-11.44	-12.76
4363.41	V	61.52	45.70	74	54	-12.48	-8.30
1818.43	H	61.57	41.07	74	54	-12.43	-12.93
3637.97	H	62.3	41.37	74	54	-11.7	-12.63
4838.59	H	61.22	41.70	74	54	-12.78	-12.30

Test mode: Lora Frequency: Channel 64: 914.9MHz

Freq. (MHz)	Ant.Pol. H/V	Emission Level(dBuV/m)		Limit 3m(dBuV/m)		Over(dB)	
		PK	AV	PK	AV	PK	AV
1831.32	V	60.94	44.58	74	54	-13.06	-9.42
3665.03	V	59.8	41.69	74	54	-14.2	-12.31
4368.87	V	61.9	45.32	74	54	-12.1	-8.68
1830.88	H	56.18	45.00	74	54	-17.82	-9.00
3662.52	H	59.18	43.21	74	54	-14.82	-10.79
4837.62	H	63.44	47.40	74	54	-10.56	-6.60

Note: (1) All Readings are Peak Value (VBW=3MHz) and Peak Value (VBW=10Hz).
(2) Emission Level= Reading Level+Probe Factor +Cable Loss.
(3) Data of measurement within this frequency range shown " -- " in the table above means the reading of emissions are attenuated more than 20dB below the permissible limits or the field strength is too small to be measured.

n Spurious Emission below 1GHz (30MHz to 1GHz)

All mode have been tested, and the worst result was report as below:

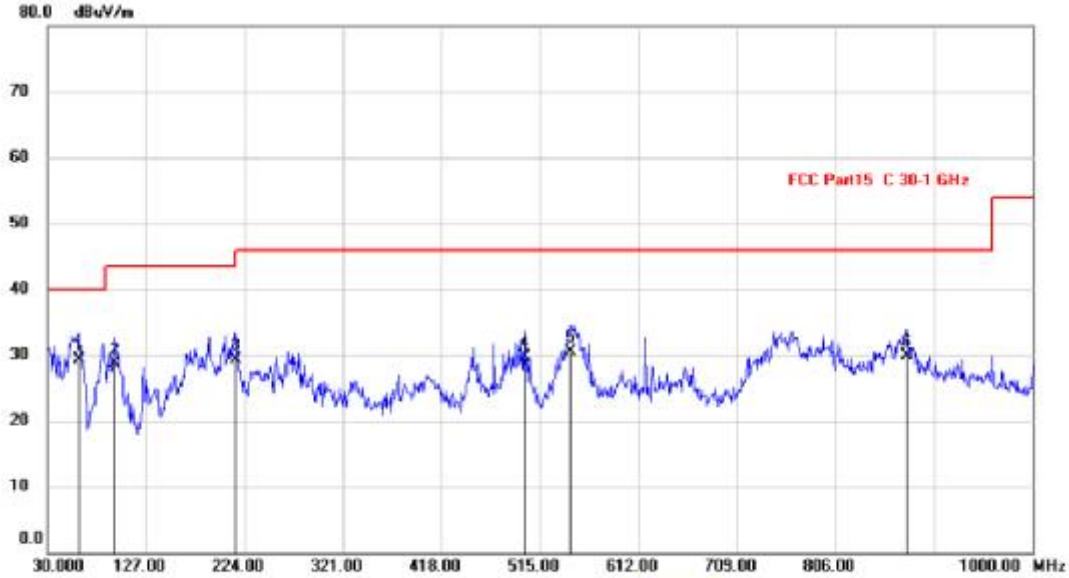

Site

Limit: FCC Part15 C 30-1 GHz

Mode: Hopping

Note:

Polarization: *Vertical*

Power: AC 120 V/60 Hz

Temperature: 24°C

Humidity: 51 %

No.	Mk.	Freq.	Reading Level	Correct Factor	Measure-ment	Limit	Over	
		MHz	dBuV	dB	dBuV/m	dBuV/m	dB	Detector
1	*	61.0400	53.23	-23.88	29.35	40.00	-10.65	QP
2		96.9300	53.75	-25.09	28.66	43.50	-14.84	QP
3		215.2700	55.32	-26.02	29.30	43.50	-14.20	QP
4		500.4500	51.69	-22.02	29.67	46.00	-16.33	QP
5		545.0700	51.22	-20.72	30.50	46.00	-15.50	QP
6		875.8400	45.00	-15.02	29.98	46.00	-16.02	QP

*:Maximum data x:Over limit !:over margin ¡´Reference Only

Site

Limit: FCC Part15 C 30-1 GHz

Polarization: *Horizontal*

Power: AC 120 V/60 Hz

Temperature: 24 °C

Humidity: 51 %

Mode: Hopping

Note:

No.	Mk.	Freq.	Reading Level	Correct Factor	Measure-ment	Limit	Over	
		MHz	dBuV	dB	dBuV/m	dBuV/m	dB	Detector
1		62.9800	52.88	-24.89	27.99	40.00	-12.01	QP
2		97.9000	53.25	-24.83	28.42	43.50	-15.08	QP
3	*	183.2600	58.89	-26.83	32.06	43.50	-11.44	QP
4		240.4900	58.81	-24.89	33.92	46.00	-12.08	QP
5		544.1000	50.49	-20.74	29.75	46.00	-16.25	QP
6		797.2700	47.61	-15.30	32.31	46.00	-13.69	QP

*:Maximum data x:Over limit !:over margin ¡´Reference Only

8.8 CONDUCTED EMISSION TEST

8.8.1 Applicable Standard

According to FCC Part 15.207(a)

8.8.2 Conformance Limit

Conducted Emission Limit		
Frequency(MHz)	Quasi-peak	Average
0.15-0.5	66-56	56-46
0.5-5.0	56	46
5.0-30.0	60	50
Note: 1. The lower limit shall apply at the transition frequencies 2. The limit decreases in line with the logarithm of the frequency in the range of 0.15 to 0.50MHz.		

8.8.3 Test Configuration

Test according to clause 7.3 conducted emission test setup

8.8.4 Test Procedure

The EUT was placed on a table which is 0.8m above ground plane.
Maximum procedure was performed on the highest emissions to ensure EUT compliance.
Repeat above procedures until all frequency measured were complete.

8.8.5 Test Results

Pass

All mode been tested, and the worst result recorded was report as below:

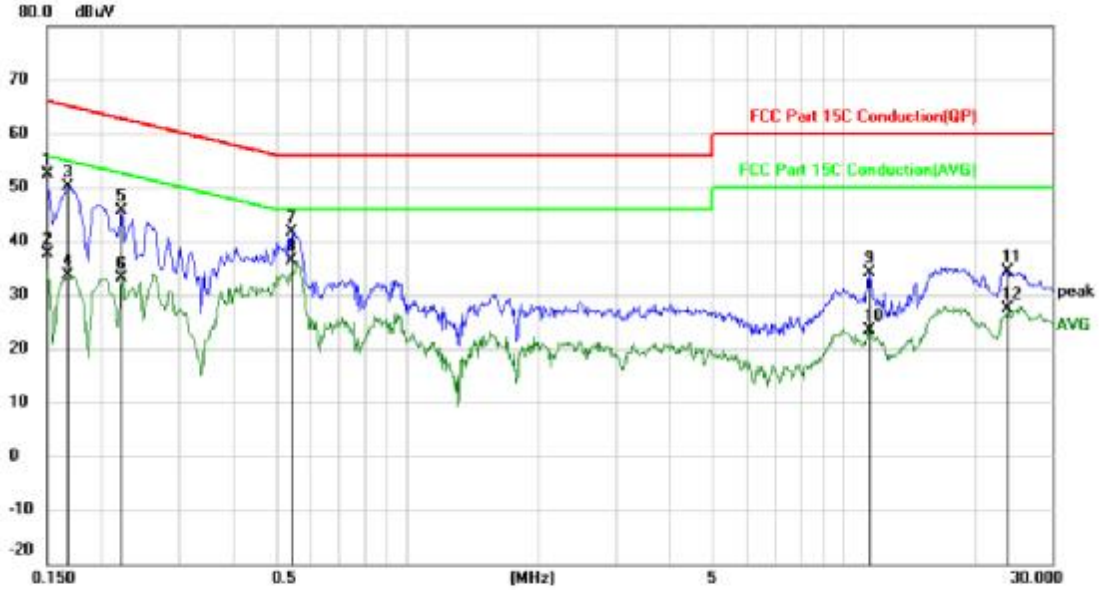

Site | Phase: N | Temperature: 23

Limit: FCC Part 15C Conduction(QP) | Power: AC 120 V/60 Hz | Humidity: 55 %

Mode: 915 Mode

Note:

No.	Mk.	Freq.	Reading Level	Correct Factor	Measure-ment	Limit	Over		
		MHz	dBuV	dB	dBuV	dBuV	dB	Detector	Comment
1		0.1500	42.45	10.05	52.50	66.00	-13.50	QP	
2		0.1500	27.56	10.05	37.61	56.00	-18.39	AVG	
3		0.1675	39.96	10.05	50.01	65.08	-15.07	QP	
4		0.1675	23.70	10.05	33.75	55.08	-21.33	AVG	
5		0.2220	35.67	10.05	45.72	62.74	-17.02	QP	
6		0.2220	22.97	10.05	33.02	52.74	-19.72	AVG	
7		0.5433	31.47	10.06	41.53	56.00	-14.47	QP	
8	*	0.5433	26.25	10.06	36.31	46.00	-9.69	AVG	
9		11.4375	23.44	10.63	34.07	60.00	-25.93	QP	
10		11.4375	12.81	10.63	23.44	50.00	-26.56	AVG	
11		23.6358	23.70	10.80	34.50	60.00	-25.50	QP	
12		23.6358	16.61	10.80	27.41	50.00	-22.59	AVG	

*:Maximum data x:Over limit !:over margin 〈Reference Only

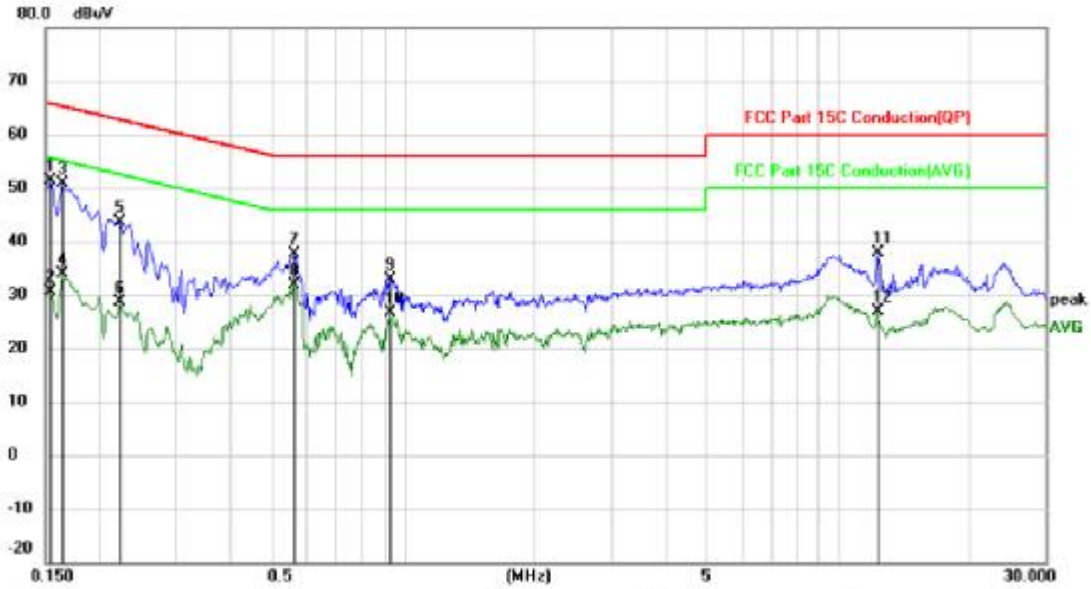

Site | Phase: L1 | Temperature: 23

Limit: FCC Part 15C Conduction(QP) | Power: AC 120 V/60 Hz | Humidity: 55 %

Mode: 915 Mode

Note:

No.	Mk.	Freq.	Reading Level	Correct Factor	Measure-ment	Limit	Over		
		MHz	dBuV	dB	dBuV	dBuV	dB	Detector	Comment
1		0.1539	41.40	10.05	51.45	65.79	-14.34	QP	
2		0.1539	20.62	10.05	30.67	55.79	-25.12	AVG	
3		0.1633	40.79	10.05	50.84	65.29	-14.45	QP	
4		0.1633	23.73	10.05	33.78	55.29	-21.51	AVG	
5		0.2220	33.70	10.05	43.75	62.74	-18.99	QP	
6		0.2220	18.47	10.05	28.52	52.74	-24.22	AVG	
7		0.5611	27.57	10.07	37.64	56.00	-18.36	QP	
8	*	0.5611	21.93	10.07	32.00	46.00	-14.00	AVG	
9		0.9282	22.63	10.14	32.77	56.00	-23.23	QP	
10		0.9282	16.51	10.14	26.65	46.00	-19.35	AVG	
11		12.3179	27.16	10.78	37.94	60.00	-22.06	QP	
12		12.3179	15.98	10.78	26.76	50.00	-23.24	AVG	

*:Maximum data x:Over limit !:over margin 〈Reference Only

8.9 ANTENNA APPLICATION

8.9.1 Antenna Requirement

Standard	Requirement
FCC CRF Part 15.203	An intentional radiator shall be designed to ensure that no antenna other than that furnished by the responsible party shall be used with the device. The use of a permanently attached antenna or of an antenna that uses a unique coupling to the intentional radiator shall be considered sufficient to comply with the provisions of this section. The manufacturer may design the unit so that a broken antenna can be replaced by the user, but the use of a standard antenna jack or electrical connector is prohibited. This requirement does not apply to carrier current devices or to devices operated under the provisions of §15.211, §15.213, §15.217, §15.219, or §15.221. Further, this requirement does not apply to intentional radiators that must be professionally installed, such as perimeter protection systems and some field disturbance sensors, or to other intentional radiators which, in accordance with §15.31(d), must be measured at the installation site. However, the installer shall be responsible for ensuring that the proper antenna is employed so that the limits in this part are not exceeded.

For intentional device, according to FCC 47 CFR Section 15.203, an intentional radiator shall be designed to ensure that no antenna other than that furnished by the responsible party shall be used with the device. And according to FCC 47 CFR Section 15.247 (b), if transmitting antennas of directional gain greater than 6dBi are used, the power shall be reduced by the amount in dB that the directional gain of the antenna exceeds 6dBi.

8.9.2 Result

PASS.

The EUT has 1 antenna: a External Antenna for 915M with classic model, the gain is 3 dBi;

Note:
- ☐ Antenna use a permanently attached antenna which is not replaceable.
- ☒ Not using a standard antenna jack or electrical connector for antenna replacement
- ☐ The antenna has to be professionally installed (please provide method of installation)

which in accordance to section 15.203, please refer to the internal photos.

--------- END OF REPORT --------