TEST REPORT

Report Number. ..... :	90235-22-72-22-PP003	
Date of issue ..... :	Aug 30, 2022	
Tested by (+signature) ..... :	Duke	Duke Chen
Approved by (+signature) ..... :	Jason	Jason gao
Testing Laboratory name ..... :	SLG-CPC Testlaboratory Co., Ltd.	
Address ..... :	No. 11, Wu Song Road, Dongcheng District, Dongguan, Guangdong Province, China 523117	
Applicant's name..... :	NANJING MIDAS TECHNOLOGY CO., LTD	
Address ..... :	Block A, Kechuang Building, Lishui District, Nanjing City, Jiangsu Province	
Manufacturer's name ..... :	NANJING MIDAS TECHNOLOGY CO., LTD	
Address ..... :	Block A, Kechuang Building, Lishui District, Nanjing City, Jiangsu Province	
Factory's name ..... :	NANJING MIDAS TECHNOLOGY CO., LTD	
Address ..... :	Block A, Kechuang Building, Lishui District, Nanjing City, Jiangsu Province	
Standard(s) ..... :	FCC 47 CFR Part 2, Subpart J FCC 47 CFR Part 15, Subpart C	
Test item description ..... :	Midas-926 Gateway Light	
Trade Mark ..... :	Midas	
Model/Type reference ..... :	Midas-926.GM915	
FCC ID ..... :	2A293M926GM915	
Date of receipt of test item ..... :	Jul 06, 2022	
Date (s) of performance of test:	Jul 07, 2022 to Aug 29, 2022	
Summary of Test Results ..... :	**Pass**	
The Summary of Test Results based on a technical opinion belongs to the standard(s).		

General disclaimer:

This report shall not be reproduced except in full, without the written approval of SLG-CPC Testlaboratory Co., Ltd. The test results in the report only apply to the tested sample.

Address:No.11,WuSongRoad, DongchengDistrict,Dongguan, GuangdongProvince,China523117

Tel: 86-769-22607797
Fax: 86-769-22607907
http://www.cpcteam.com

Table of Contents

1 EUT TECHNICAL DESCRIPTION 3
2 SUMMARY OF TEST RESULT 4
3 TEST METHODOLOGY 5
3.1 GENERAL DESCRIPTION OF APPLIED STANDARDS 5
3.2 MEASUREMENT EQUIPMENT USED 5
3.3 DESCRIPTION OF TEST MODES 6
4 FACILITIES AND ACCREDITATIONS 7
4.1 FACILITIES 7
4.2 LABORATORY ACCREDITATIONS AND LISTINGS 7
5 TEST SYSTEM UNCERTAINTY 8
6 SETUP OF EQUIPMENT UNDER TEST 9
6.1 RADIO FREQUENCY TEST SETUP 1 9
6.2 RADIO FREQUENCY TEST SETUP 2 9
6.3 CONDUCTED EMISSION TEST SETUP 11
6.4 BLOCK DIAGRAM CONFIGURATION OF TEST SYSTEM 12
6.5 SUPPORT EQUIPMENT 12
7 TEST REQUIREMENTS 13
7.1 20DB BANDWIDTH 13
7.2 CARRIER FREQUENCY SEPARATION 16
7.3 NUMBER OF HOPPING FREQUENCIES 19
7.4 AVERAGE TIME OF OCCUPANCY (DWELL TIME) 21
7.5 MAXIMUM PEAK CONDUCTED OUTPUT POWER 23
7.6 CONDUCTED SUPRIOUS EMISSION 26
7.7 RADIATED SPURIOUS EMISSION 31
7.8 CONDUCTED EMISSION TEST 36
7.9 ANTENNA APPLICATION 39

1 EUT TECHNICAL DESCRIPTION

Characteristics	Description
Product	Midas-926 Gateway Light
Model Number	Midas-926.GM915
Modulation:	Lora modulation for 915M
Operating Frequency Range(s):	902.3-914.9MHz
Number of Channels:	64 channels
Transmit Power Max:	21.57 dBm
Antenna Type	External Antenna
Antenna Gain	3 dBi
Power supply	☒DC supply: DC 5V
	☒Adapter supply: Model:AS2401A-0503000US IN PUT:100~240V 50/60Hz 0.8A MAX OUT PUT: 5V 3000mA
Temperature Range:	-20°C ~ +55°C

Note: *for more details, please refer to the User's manual of the EUT.*

2 SUMMARY OF TEST RESULT

FCC Part Clause	Test Parameter	Verdict	Remark
15.247(a)(1)	20 dB Bandwidth	PASS	
15.247(a)(1)	Carrier Frequency Separation	PASS	
15.247(a)(1)	Number of Hopping Frequencies	PASS	
15.247(a)(1)	Average Time of Occupancy (Dwell Time)	PASS	
15.247(b)(2)	Maximum Peak Conducted Output Power	PASS	
15.247(d)	Conducted Spurious Emissions	PASS	
15.247(d) 15.209 15.205	Radiated Spurious Emissions	PASS	
15.207	Conducted Emission	PASS	
15.203	Antenna Application	PASS	
NOTE1: N/A (Not Applicable)			

RELATED SUBMITTAL(S) / GRANT(S):

This submittal(s) (test report) is intended for FCC ID: 2A293M926GM915 filing to comply with Section 15.247 of the FCC Part 15, Subpart C Rules.

3 TEST METHODOLOGY

3.1 GENERAL DESCRIPTION OF APPLIED STANDARDS

According to its specifications, the EUT must comply with the requirements of the following standards:
FCC 47 CFR Part 2, Subpart J
FCC 47 CFR Part 15, Subpart C
FCC KDB 558074 D01 15.247 Meas Guidance v05r02

3.2 MEASUREMENT EQUIPMENT USED

Equipment	Model	Manufacturer	S/N	Last Cal.	DUE Cal.
RF Connected Test					
Vector Signal Generater	Rohde & Schwarz	SMBV100B(6G)	101166	2022/06/29	1 year
Analog Signal Generator	Rohde & Schwarz	SMB100A(40G)	181333	2022/06/29	1 year
Signal Analyzer	Rohde & Schwarz	FSV40	101527	2022/04/19	1 year
Power Analyzer	Rohde & Schwarz	OSP-B157W8	N/A	2022/06/29	1 year
Wideband Radio Communication Tester	R&S	CMW270	101985	2022/07/05	1 year
Temperature&Humidity test chamber	ESPEC	VC 4018	/	2022/03/23	1 year
Wideband Radio Communication Tester	Rohde & Schwarz	CMW500	166898	2021/09/07	1 year
Radiated Emission Test					
EMI Test Receiver	KEYSIGHT	N9010A	MY56070465	2021/12/10	1 year
EMI Test Receiver	Rohde & Schwarz	FSV40	101511	2022/04/19	1 year
Bilog Antenna	Schwarzbeck	VULB 9163	01335	2020/04/28	3 year
Power Amplifier	EMEC	EM330	060676	2021/12/10	3 year
Cable	Tuyue	F4309	L-400-NmNm-12000	2021/12/10	1 year
Horn Antenna	Schwarzbeck	BBHA9120D	1779	2022/04/21	3 year
Horn Antenna	Schwarzbeck	BBHA9170	00954	2019/10/09	3 year
Power Amplifier	Rohde & Schwarz	SCU-18F	180118	2022/04/21	3 year
Active Loop Antenna	ETS LINDGREN	6512	41623	2022/04/23	3 year
Test Software	Farad	EZ-EMC	Ver.CPC-3A1	/	/
Conducted Emission Test					
LISN	Schwarzbeck	NSLK 8127	8127-892	2022/03/19	1 year
LISN	Schwarzbeck	NSLK 8127	8127-437	2022/08/26	1 year
EMI Test Receiver	R&S	ESR3	102124	2021/12/10	1 year
Pulse Limiter	R&S	ESH3-Z2	357.8810.52	2021/12/10	1 year
Test Software	Farad	EZ-EMC	Ver.CPC-3A1	/	/

3.3 DESCRIPTION OF TEST MODES

The EUT has been tested under its typical operating condition.
The EUT configuration for testing is installed on RF field strength measurement to meet the Commissions requirement and operating in a manner which intends to maximize its emission characteristics in a continuous normal application.

The Transmitter was operated in the normal operating mode. The TX frequency was fixed which was for the purpose of the measurements.

Test of channel included the lowest and middle and highest frequency to perform the test, then record on this report.

Those data rates Lora modulation were used for all test.

Pre-defined engineering program for regulatory testing used to control the EUT for staying in continuous transmitting and receiving mode is programmed.

Frequency and Channel list for 915M

Channel	Frequency (MHz)	Channel	Frequency (MHz)	Channel	Frequency (MHz)
1	902.3	33	908.7	…	…
2	902.5	34	908.9	62	914.5
3	902.7	35	909.1	63	914.7
…	…	…	…	64	914.9

Test Frequency and channel for 915M

Lowest Frequency		Middle Frequency		Highest Frequency	
Channel	Frequency (MHz)	Channel	Frequency (MHz)	Channel	Frequency (MHz)
1	902.3	33	908.7	64	914.9

4 FACILITIES AND ACCREDITATIONS

4.1 FACILITIES

All measurement facilities used to collect the measurement data are located at

No. 11, Wu Song Road, Dongcheng District, Dongguan, Guangdong Province, China 523117
The sites are constructed in conformance with the requirements of ANSI C63.4, ANSI C63.10 and CISPR Publication 32.

4.2 LABORATORY ACCREDITATIONS AND LISTINGS

Site Description

EMC Lab.	:	Accredited by ISED, October 04 2021 CAB identifier: CN0126 Company Number: 27767 Accredited by A2LA, October 04 2021 The Certificate Registration Number is 6325.01
Name of Firm	:	SLG-CPC Testlaboratory Co., Ltd.
Site Location	:	No. 11, Wu Song Road, Dongcheng District, Dongguan, Guangdong Province, China 523117

5 TEST SYSTEM UNCERTAINTY

The following measurement uncertainty levels have been estimated for tests performed on the apparatus:

Parameter	Uncertainty
Radio Frequency	±1x10^-5
Maximum Peak Output Power Test	±1.0%
Conducted Emissions Test	±3.08dB
Radiated Emission Test	±4.60dB
Power Density	±0.9%
Occupied Bandwidth Test	±2.3%
Band Edge Test	±1.2%
Antenna Port Emission	±3dB
Temperature	±3.2%
Humidity	±2.5%

Measurement Uncertainty for a level of Confidence of 95%

6 SETUP OF EQUIPMENT UNDER TEST

6.1 RADIO FREQUENCY TEST SETUP 1

The 915M component's antenna ports(s) of the EUT are connected to the measurement instrument per an appropriate attenuator. The EUT is controlled by PC/software to emit the specified signals for the purpose of measurements.

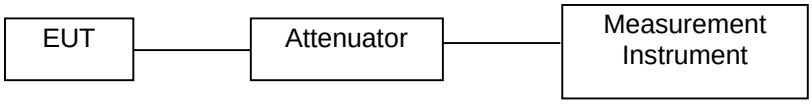

6.2 RADIO FREQUENCY TEST SETUP 2

The test site semi-anechoic chamber has met the requirement of NSA tolerance 4 dB according to the standards: ANSI C63.10. The test distance is 3m.The setup is according to the requirements in Section 13.1.4.1 of ANSI C63.10-2013 and CAN/CSA-CEI/IEC CISPR 32.

Below 30MHz：

The EUT is placed on a turntable 0.8meters above the ground in the chamber, 3 meter away from the antenna (loop antenna). The Antenna should be positioned with its plane vertical at the specified distance from the EUT and rotated about its vertical axis for maximum response at each azimuth about the EUT. The center of the loop shall be 1 m above the ground. For certain applications, the loop antenna plane may also need to be positioned horizontally at the specified distance from the EUT.

Above 30MHz：

The EUT is placed on a turntable 0.8meters above the ground in the chamber, 3 meter away from the antenna. The maximal emission value is acquired by adjusting the antenna height, polarisation and turntable azimuth. Normally, the height range of antenna is 1 m to 4 m, the azimuth range of turntable is 0° to 360°, and the receive antenna has two polarizations Vertical (V) and Horizontal (H).

Above 1GHz:

(Note: the FCC's permission to use 1.5m as an alternative per TCBC Conf call of Dec. 2, 2014.)

The EUT is placed on a turntable 1.5 meters above the ground in the chamber, 3 meter away from the antenna. The maximal emission value is acquired by adjusting the antenna height, polarisation and turntable azimuth. Normally, the height range of antenna is 1 m to 4 m, the azimuth range of turntable is 0° to 360°, and the receive antenna has two polarizations Vertical (V) and Horizontal (H).

(a) Radiated Emission Test Set-Up, Frequency Below 30MHz

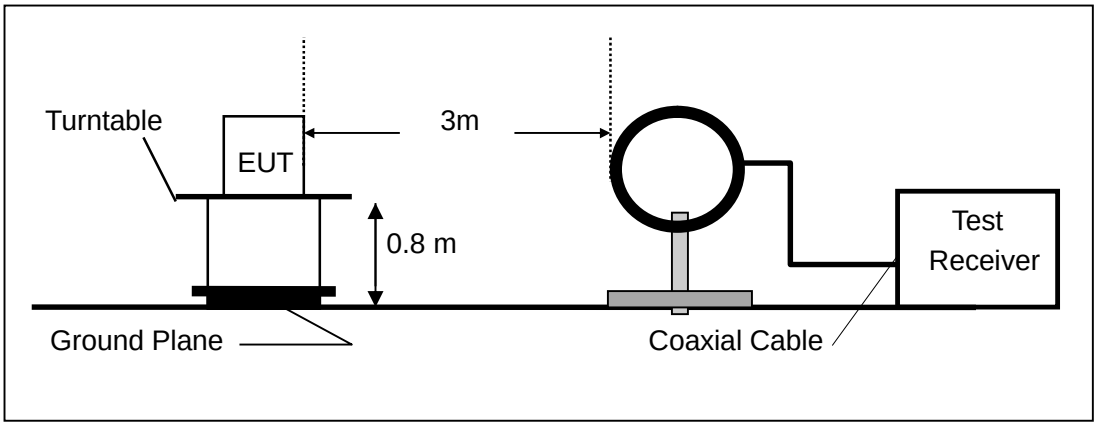

(b) Radiated Emission Test Set-Up, Frequency Below 1000MHz

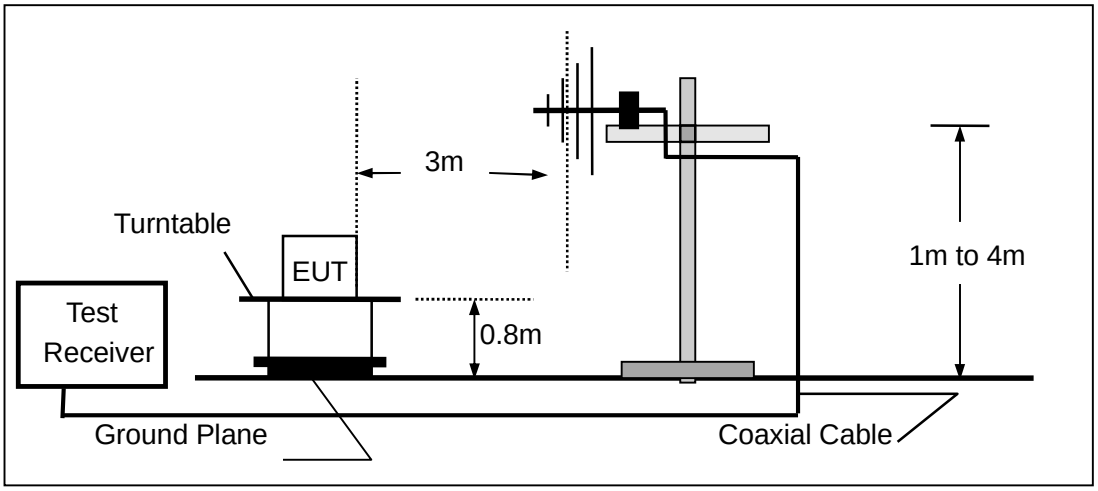

(c) Radiated Emission Test Set-Up, Frequency above 1000MHz

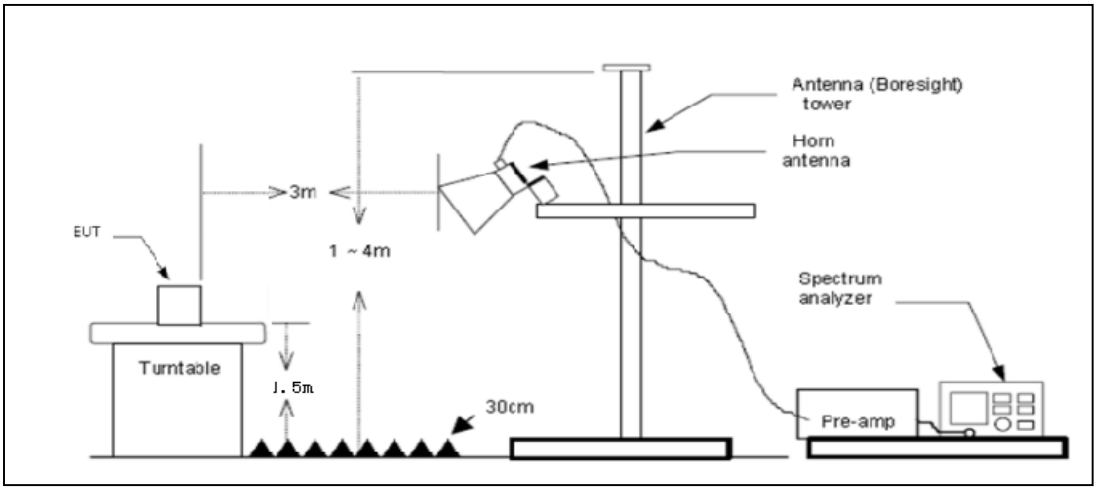

6.3 CONDUCTED EMISSION TEST SETUP

The mains cable of the EUT (Perfect Share Mini) must be connected to LISN. The LISN shall be placed 0.8m from the boundary of EUT and bonded to a ground reference plane for LISN mounted on top of the ground reference plane. This distance is between the closest points of the LISN and the EUT. All other units of the EUT and associated equipment shall be at least 0.8m from the LISN.

Ground connections, where required for safety purposes, shall be connected to the reference ground point of the LISN and, where not otherwise provided or specified by the manufacturer, shall be of same length as the mains cable and run parallel to the mains connection at a separation distance of not more than 0.8m.

According to the requirements in Section 13.1.4.1 of ANSI C63.10-2013 Conducted emissions from the EUT measured in the frequency range between 0.15 MHz and 30 MHz using CISPR Quasi-Peak and average detector mode.

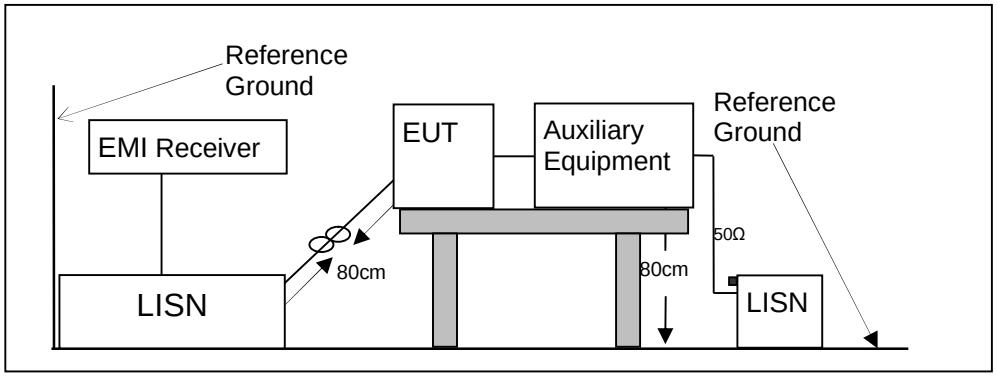

6.4 BLOCK DIAGRAM CONFIGURATION OF TEST SYSTEM

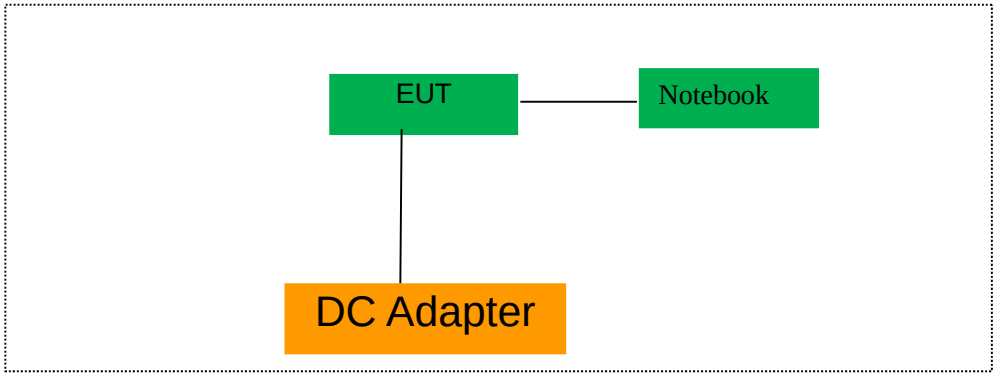

6.5 SUPPORT EQUIPMENT

EUT Cable List and Details			
Cable Description	Length (m)	Shielded/Unshielded	With / Without Ferrite
DC cable	1.0	Unshielded	Without Ferrite

Auxiliary Cable List and Details			
Cable Description	Length (m)	Shielded/Unshielded	With / Without Ferrite

Auxiliary Equipment List and Details			
Description	Manufacturer	Model	Serial Number
Notebook	Lenovo	MPNXB1505007	MP1XHYV7

Notes:

1. *All the equipment/cables were placed in the worst-case configuration to maximize the emission during the test.*
2. *Grounding was established in accordance with the manufacturer's requirements and conditions for the intended use.*

7 TEST REQUIREMENTS

7.1 20DB BANDWIDTH

7.1.1 Applicable Standard

According to FCC Part 15.247(a)(1) and KDB 558074 D01 15.247 MEAS GUIDANCE v05r02

7.1.2 Conformance Limit

No limit requirement.

7.1.3 Test Configuration

Test according to clause 6.1 radio frequency test setup 1

7.1.4 Test Procedure

The EUT was operating in 915M mode and controlled its channel. Printed out the test result from the spectrum by hard copy function.
The RF output of EUT was connected to the spectrum analyzer by RF cable and attenuator. The path loss was compensated to the results for each measurement.
Set to the maximum power setting and enable the EUT transmit continuously
Set RBW = 30 kHz.
Set the video bandwidth (VBW) =100 kHz.
Set Span= approximately 2 to 3 times the 20 dB bandwidth
Set Detector = Peak.
Set Trace mode = max hold.
Set Sweep = auto couple.
The EUT should be transmitting at its maximum data rate. Allow the trace to stabilize. Use the marker-to-peak function to set the marker to the peak of the emission. Use the marker-delta function to measure 20 dB down one side of the emission. Reset the markerdelta function, and move the marker to the other side of the emission, until it is (as close as possible to) even with the reference marker level. The marker-delta reading at this point is the 20 dB bandwidth of the emission.
If this value varies with different modes of operation (e.g., data rate, modulation format, etc.), repeat this test for each variation.
Measure and record the results in the test report.

Test Results

Temperature:	26° C
Relative Humidity:	54%
ATM Pressure:	1011 mbar

Modulation Mode	Channel Number	Channel Frequency (MHz)	Measurement Bandwidth (kHz)	Limit (kHz)	Verdict
Lora	1	902.3	202.6	<500	PASS
	33	908.7	198.6	<500	PASS
	64	914.9	205.6	<500	PASS

Test Model	20dB Bandwidth 915M Channel 1: 902.3MHz	Lora Modulation

Test Model	20dB Bandwidth 915M Channel 33: 908.7MHz	Lora Modulation

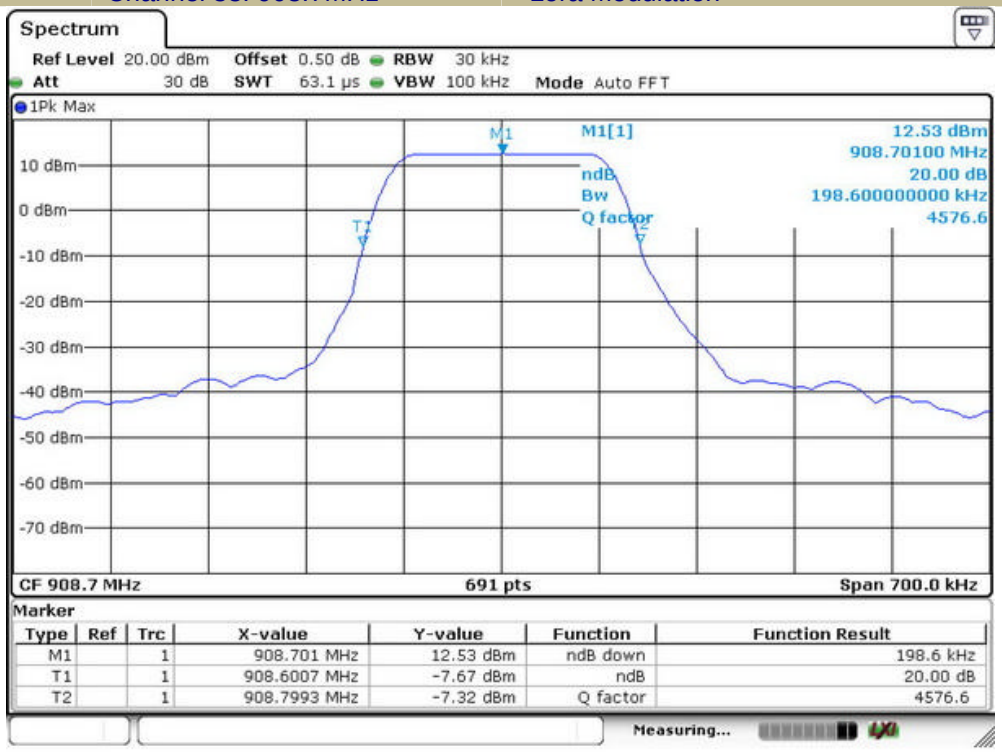

Test Model	20dB Bandwidth	
	915M	
	Channel 64: 914.9MHz	Lora Modulation

7.2 CARRIER FREQUENCY SEPARATION

7.2.1 Applicable Standard

According to FCC Part 15.247(a)(1) and KDB 558074 D01 15.247 MEAS GUIDANCE v05r02

7.2.2 Conformance Limit

Frequency hopping systems operating in the 902-928MHz band shall have hopping channel carrier frequencies separated by a minimum of 25kHz or the 20dB bandwidth of the hopping channel, whichever is greater.
In case of an output power less than 125mW, the frequency hopping system may have channels separated by a minimum of 25kHz or two-thirds of the 20dB bandwidth of the hopping channel, whichever is greater.

7.2.3 Test Configuration

Test according to clause 6.1 radio frequency test setup 1

7.2.4 Test Procedure

■ According to FCC Part15.247(a)(1)
The EUT must have its hopping function enabled. Use the following spectrum analyzer settings:
Set the RBW =30kHz. Set VBW =100kHz.
Set the span = wide enough to capture the peaks of two adjacent channels
Set Sweep time = auto couple.
Set Detector = peak. Set Trace mode = max hold.
Allow the trace to stabilize. Use the marker-delta function to determine the separation between the peaks of the adjacent channels. The limit is specified in one of the subparagraphs of this Section. Submit this plot.

Test Results

Temperature:	26° C
Relative Humidity:	54%
ATM Pressure:	1011 mbar

Modulation Mode	Channel Number	Channel Frequency (MHz)	Measurement Bandwidth (kHz)	Limit (kHz)	Verdict
Lora	1	902.3	301	>202	PASS
	33	908.7	298	>199	PASS
	64	914.9	303	>206	PASS
Note: Limit = 20dB bandwidth					

Test Model	Carrier Frequency Separation 915M Channel 1: 902.3MHz	Lora Modulation

Test Model	Carrier Frequency Separation 915M Channel 33: 908.7MHz	Lora Modulation

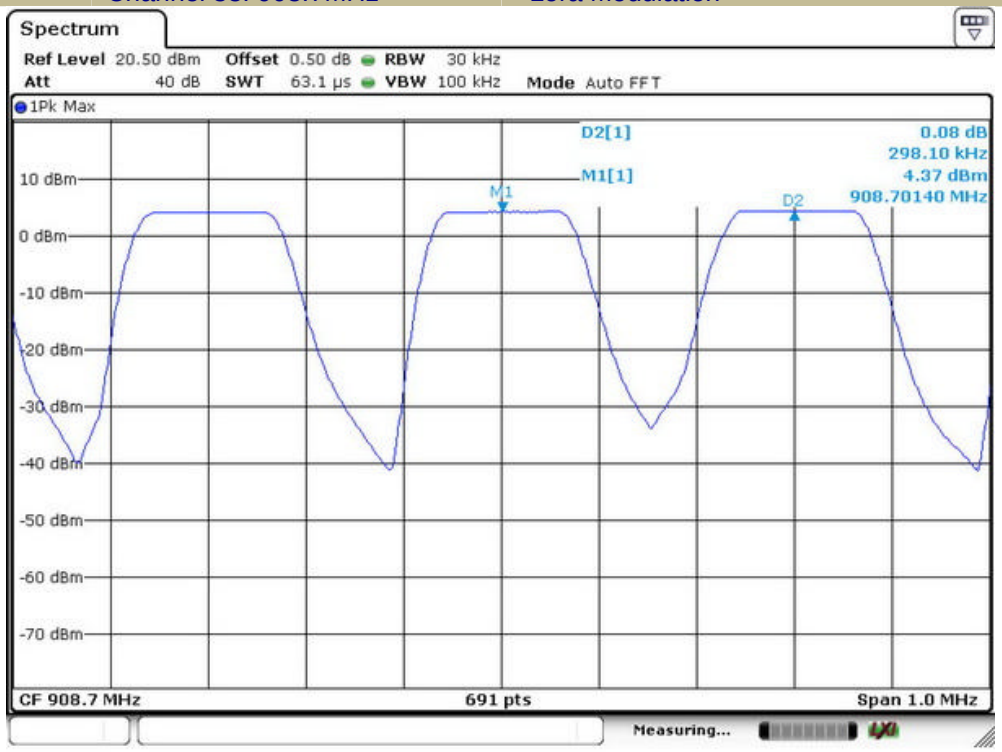

Test Model	Carrier Frequency Separation	
	915M	
	Channel 64: 914.9MHz	Lora Modulation

7.3 NUMBER OF HOPPING FREQUENCIES

7.3.1 Applicable Standard

According to FCC Part 15.247(a)(1) (i)and KDB 558074 D01 15.247 MEAS GUIDANCE v05r02

7.3.2 Conformance Limit

Frequency hopping systems operating in the 902-928MHz band shall use at least 50 channels.

7.3.3 Test Configuration

Test according to clause 6.1 radio frequency test setup 1

7.3.4 Test Procedure

■ According to FCC Part15.247(a)(1)(i)
The EUT must have its hopping function enabled. Use the following spectrum analyzer settings:
Span = the frequency band of operation (902-928MHz)
RBW ≥ 30KHz
VBW ≥ 3*RBW
Sweep = auto
Detector function = peak
Trace = max hold
Allow the trace to stabilize. It may prove necessary to break the span up to sections, in order to clearly show all of the hopping frequencies.

Test Results

Temperature:	26° C
Relative Humidity:	54%
ATM Pressure:	1011 mbar

Modulation Mode	Hopping Channel Frequency Range	Quantity of Hopping Channel	Quantity of Hopping Channel limit
Lora	902.3-914.9	64	＞50

Test Model	Number Of Hopping Frequencies 915M Span: 902-928MHz

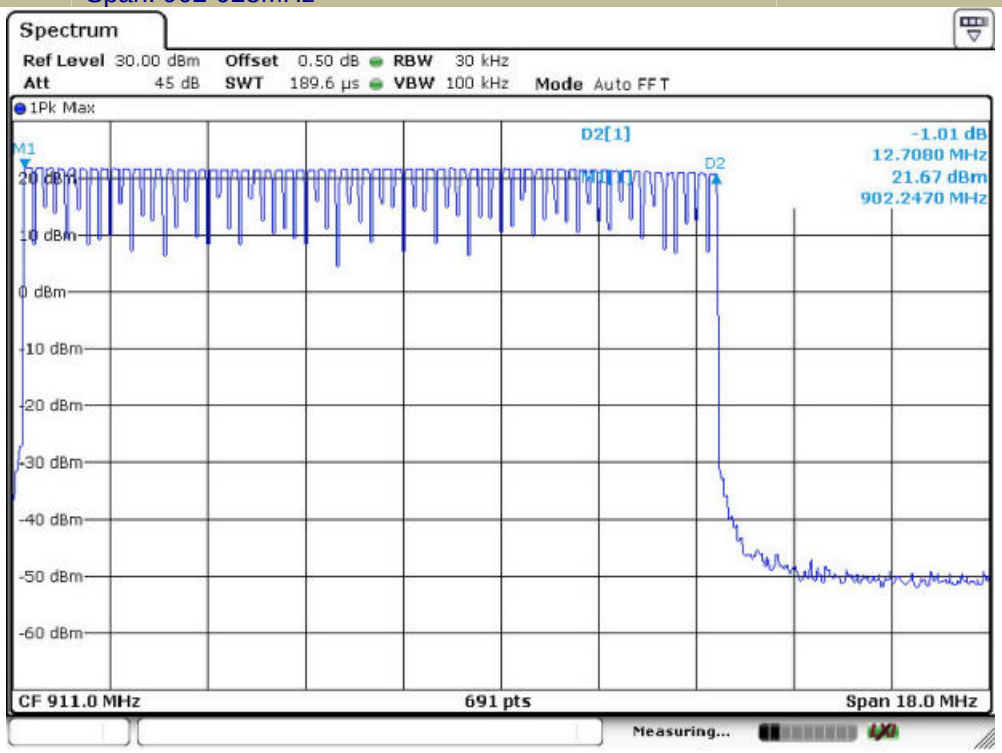

7.4 AVERAGE TIME OF OCCUPANCY (DWELL TIME)

7.4.1 Applicable Standard

According to FCC Part 15.247(a)(1)(i) and KDB 558074 D01 15.247 MEAS GUIDANCE v05r02

7.4.2 Conformance Limit

For frequency hopping systems operating in the 902-928 MHz band: if the 20 dB bandwidth of the hopping channel is less than 250 kHz, the system shall use at least 50 hopping frequencies and the average time of occupancy on any frequency shall not be greater than 0.4 seconds within a 20 second period; if the 20 dB bandwidth of the hopping channel is 250 kHz or greater, the system shall use at least 25 hopping frequencies and the average time of occupancy on any frequency shall not be greater than 0.4 seconds within a 10 second period. The maximum allowed 20 dB bandwidth of the hopping channel is 500 kHz.

7.4.3 Test Configuration

Test according to clause 6.1 radio frequency test setup 1

7.4.4 Test Procedure

■ According to FCC Part15.247(a)(1)(i)
The EUT must have its hopping function enabled. Use the following spectrum analyzer settings:
Span = zero span, centered on a hopping channel
RBW = 100kHz
VBW ≥ RBW
Sweep = as necessary to capture the entire dwell time per hopping channel
Detector function = peak
Trace = max hold
If possible, use the marker-delta function to determine the dwell time. If this value varies with different modes of operation (e.g., data rate, modulation format, etc.), repeat this test for each variation. The limit is specified in one of the subparagraphs of this Section.

7.4.5 Test Results

Temperature:	26° C
Relative Humidity:	54%
ATM Pressure:	1011 mbar

915M (Lora,) mode have been tested:

Dwell Time = 36.167ms
Total bins in 20 s =4 Max.
Allowed time = 0.4s
Total time occupancy in 20s = 36.167 * 4 = 144.67ms (which is less than 400ms)

Test Model	Average Time Of Occupancy (Dwell Time)	
	915M	
	CH 1: 902.3MHz	Lora

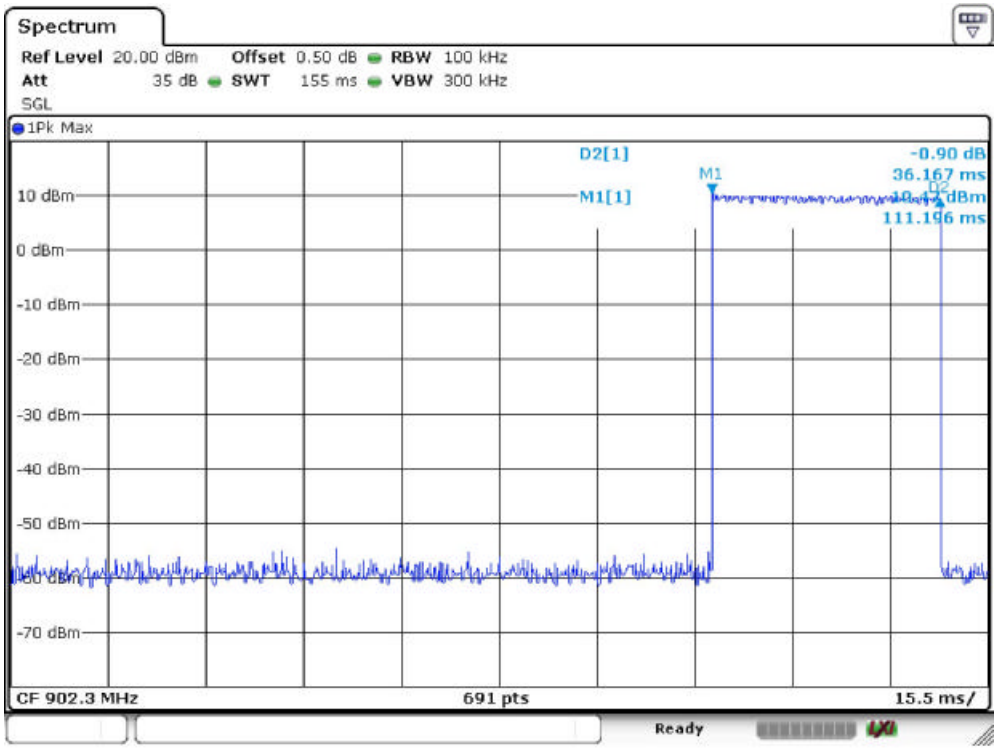

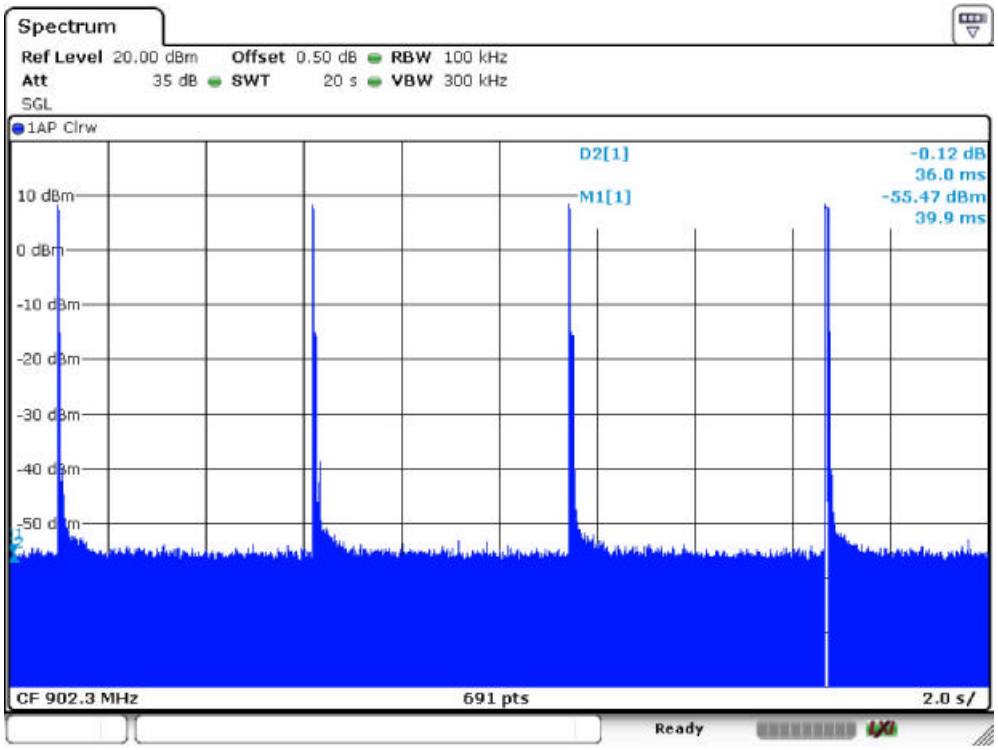

7.5 MAXIMUM PEAK CONDUCTED OUTPUT POWER

7.5.1 Applicable Standard

According to FCC Part 15.247(b)(2) and KDB 558074 D01 15.247 MEAS GUIDANCE v05r02

7.5.2 Conformance Limit

For frequency hopping systems operating in the 902-928 MHz band: 1 watt for systems employing at least 50 hopping channels; and, 0.25 watts for systems employing less than 50 hopping channels, but at least 25 hopping channels, as permitted under paragraph (a)(1)(i) of this section..

7.5.3 Test Configuration

Test according to clause 6.1 radio frequency test setup 1

7.5.4 Test Procedure

■ According to FCC Part15.247(b)(2)

As an alternative to a peak power measurement, compliance with the limit can be based on a measurement of the maximum conducted output power.
Use the following spectrum analyzer settings:
Set Span = approximately 5 times the 20 dB bandwidth, centered on a hopping channel
Set RBW > the 20 dB bandwidth of the emission being measured
Set VBW ≥ RBW
Set Sweep = auto
Set Detector function = peak
Set Trace = max hold
Allow the trace to stabilize. Use the marker-to-peak function to set the marker to the peak of the emission to determine the peak amplitude level.

Test Results

Temperature:	26° C
Relative Humidity:	54%
ATM Pressure:	1011 mbar

Operation Mode	Channel Number	Channel Frequency (MHz)	Measurement Level (dBm)	Limit (dBm)	Verdict
Lora	1	902.3	21.37	30	PASS
	33	908.7	21.57	30	PASS
	64	914.9	20.67	30	PASS
Note: N/A					

Test Model	Maximum Peak Conducted Output Power 915M Channel 1: 902.3MHz Lora

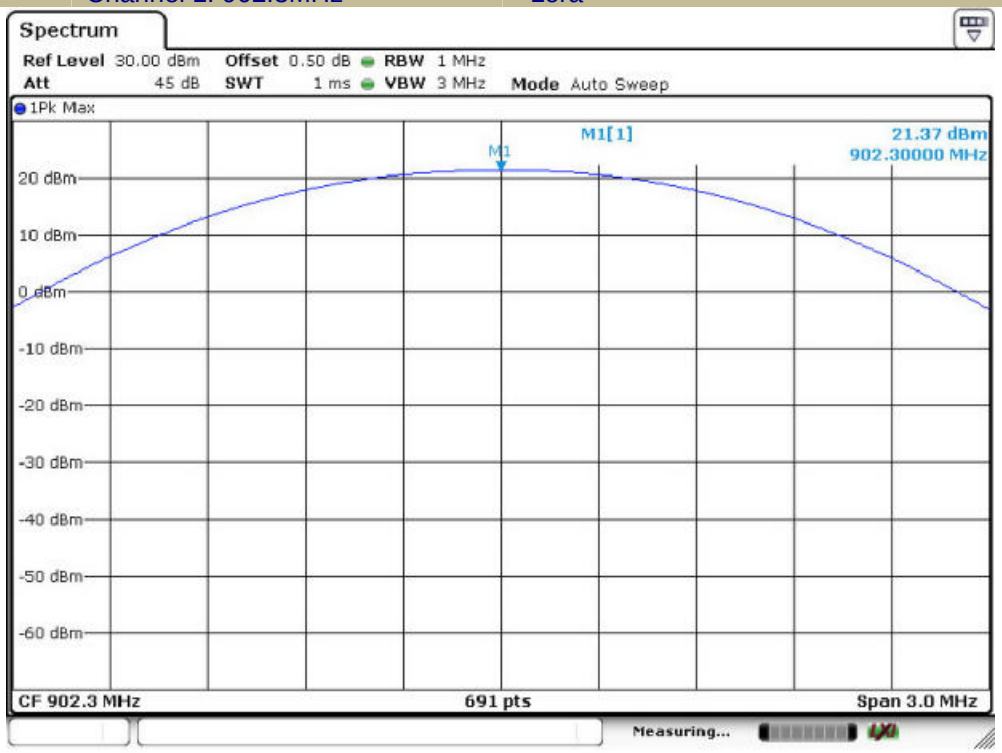

Test Model	Maximum Peak Conducted Output Power 915M Channel 33: 908.7MHz Lora

Test Model	Maximum Peak Conducted Output Power	
	915M	
	Channel 64: 914.9MHz	Lora

7.6 CONDUCTED SUPRIOUS EMISSION

7.6.1 Applicable Standard

According to FCC Part 15.247(d) and KDB 558074 D01 15.247 MEAS GUIDANCE v05r02

7.6.2 Conformance Limit

According to FCC Part 15.247(d):
In any 100 kHz bandwidth outside the frequency band in which the spread spectrum intentional radiator is operating, the radio frequency power that is produced by the intentional radiator shall be at least 20 dB below that in the 100 kHz bandwidth within the band that contains the highest level of the desired power, based on either an RF conducted, provided the transmitter demonstrates compliance with the peak conducted power limits.

7.6.3 Test Configuration

Test according to clause 6.1 radio frequency test setup 1

7.6.4 Test Procedure

The transmitter output (antenna port) was connected to the spectrum analyzer

- **Reference level measurement**

Establish a reference level by using the following procedure:
Set instrument center frequency to DSS channel center frequency.
Set Span = approximately 5 times the 20 dB bandwidth, centered on a hopping channel.
Set the RBW = 100 kHz. Set the VBW ≥ 3 x RBW.
Set Detector = peak. Set Sweep time = auto couple.
Set Trace mode = max hold. Allow trace to fully stabilize.
Use the peak marker function to determine the maximum Maximum conduceted level.
Note that the channel found to contain the maximum conduceted level can be used to establish the reference level.

- **Band-edge Compliance of RF Conducted Emissions**

Use the following spectrum analyzer settings:
Span = wide enough to capture the peak level of the emission operating on the channel closest to the band-edge, as well as any modulation products which fall outside of the authorized band of operation
Set RBW ≥ 1% of the span=100kHz Set VBW ≥ RBW
Set Sweep = auto Set Detector function = peak Set Trace = max hold
Allow the trace to stabilize. Set the marker on the emission at the bandedge, or on the highest modulation product outside of the band, if this level is greater than that at the bandedge. Enable the marker-delta function, then use the marker-to-peak function to move the marker to the peak of the in-band emission. The marker-delta value now displayed must comply with the limit specified in this Section.
Now, using the same instrument settings, enable the hopping function of the EUT. Allow the trace to stabilize. Follow the same procedure listed above to determine if any spurious emissions caused by the hopping function also comply with the specified limit.

- **Conduceted Spurious RF Conducted Emission**

Use the following spectrum analyzer settings:
Span = wide enough to capture the peak level of the in-band emission and all spurious emissions (e.g., harmonics) from the lowest frequency generated in the EUT up through the 10th harmonic.(30MHz to 25GHz). Set RBW = 100 kHz Set VBW ≥ RBW
Set Sweep = auto Set Detector function = peak Set Trace = max hold
Allow the trace to stabilize. Set the marker on the peak of any spurious emission recorded. The level displayed must comply with the limit specified in this Section.

7.6.5 Test Results

All mode have been tested, and the worst result was report as below:

Test Model	Maximum Conduceted Level RBW=100kHz 915M Channel 1: 902.3MHz Lora

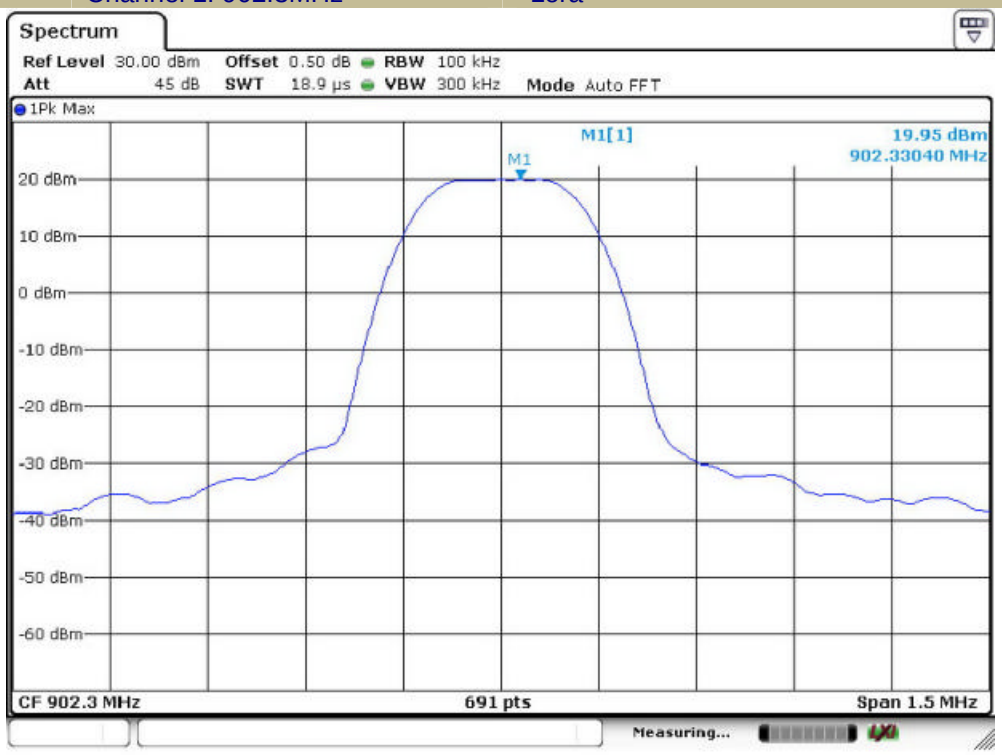

Test Model	Conduceted Spurious RF Conducted Emission 915M Channel 1: 902.3MHz Lora

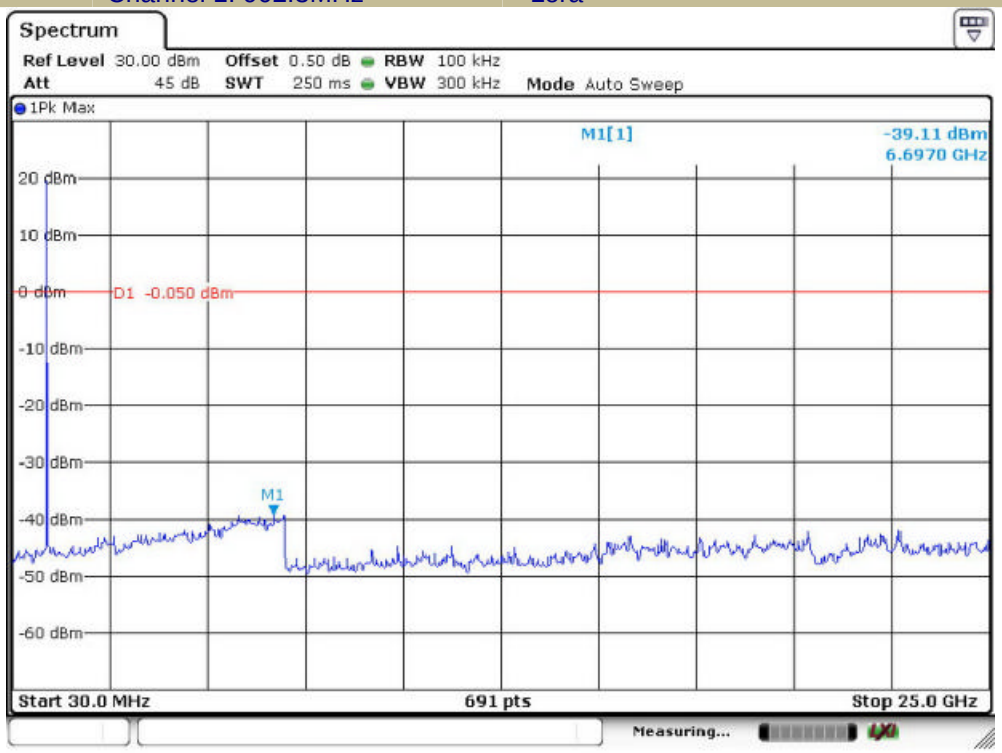

Test Model	Band-edge Conducted Emissions 915M Channel 1: 902.3MHz Lora

Test Model	Maximum Conduceted Level RBW=100kHz 915M Channel 33: 908.7MHz Lora

Test Model	Conduceted Spurious RF Conducted Emission 915M Channel 33: 908.7MHz Lora

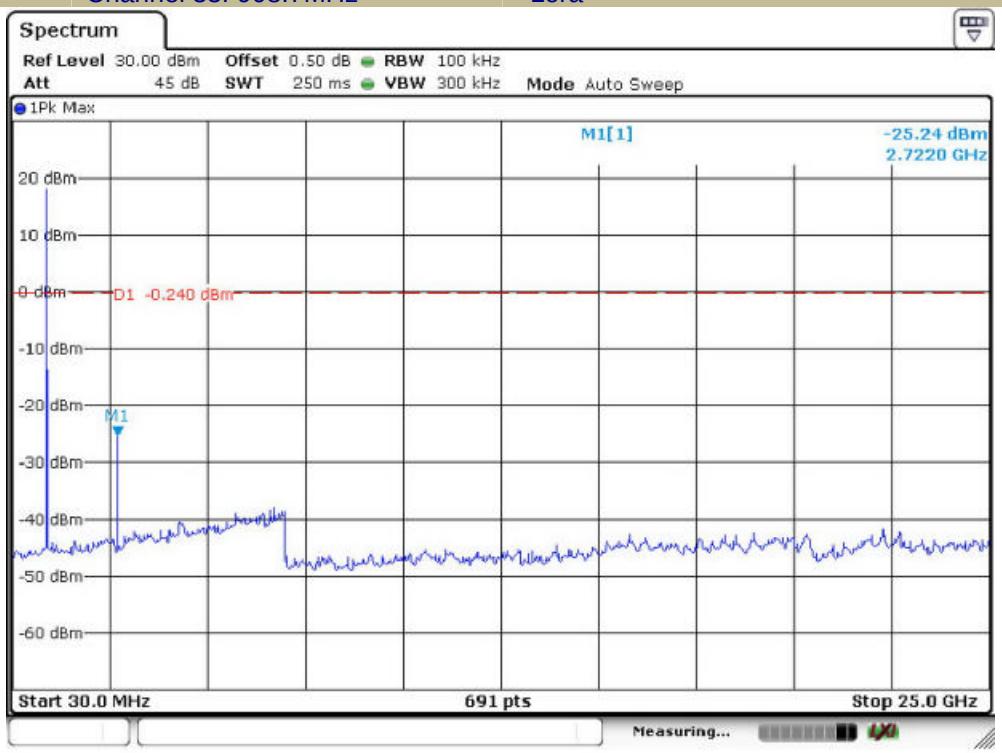

Test Model	Maximum Conduceted Level RBW=100kHz 915M Channel 64: 914.9MHz Lora

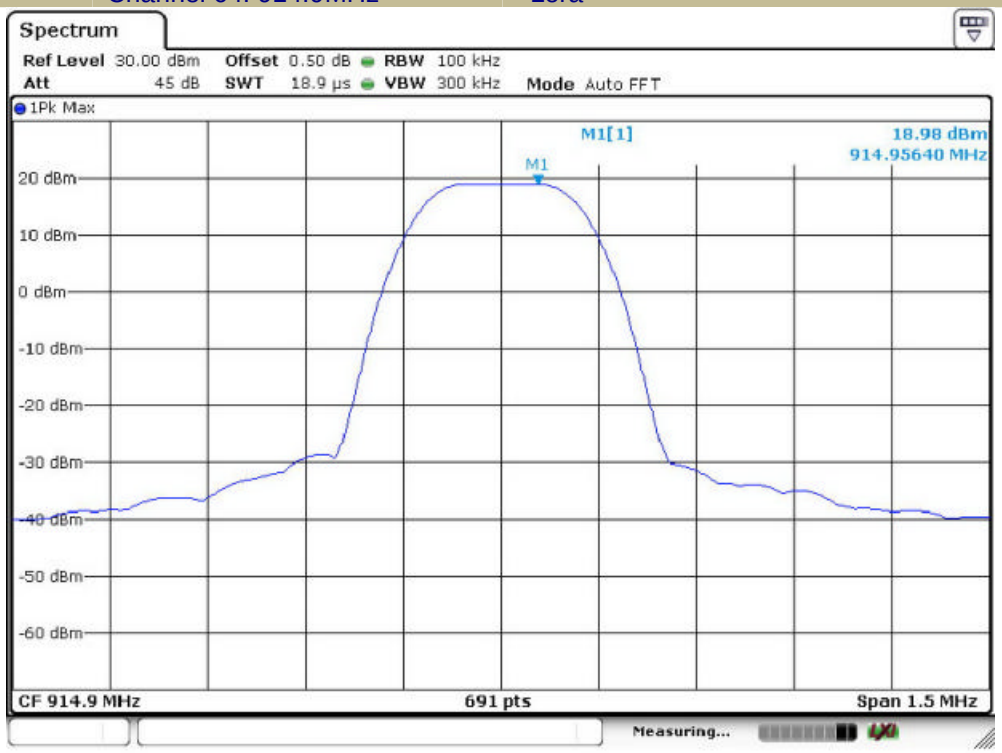

Test Model	Conduceted Spurious RF Conducted Emission 915M Channel 64: 914.9MHz Lora

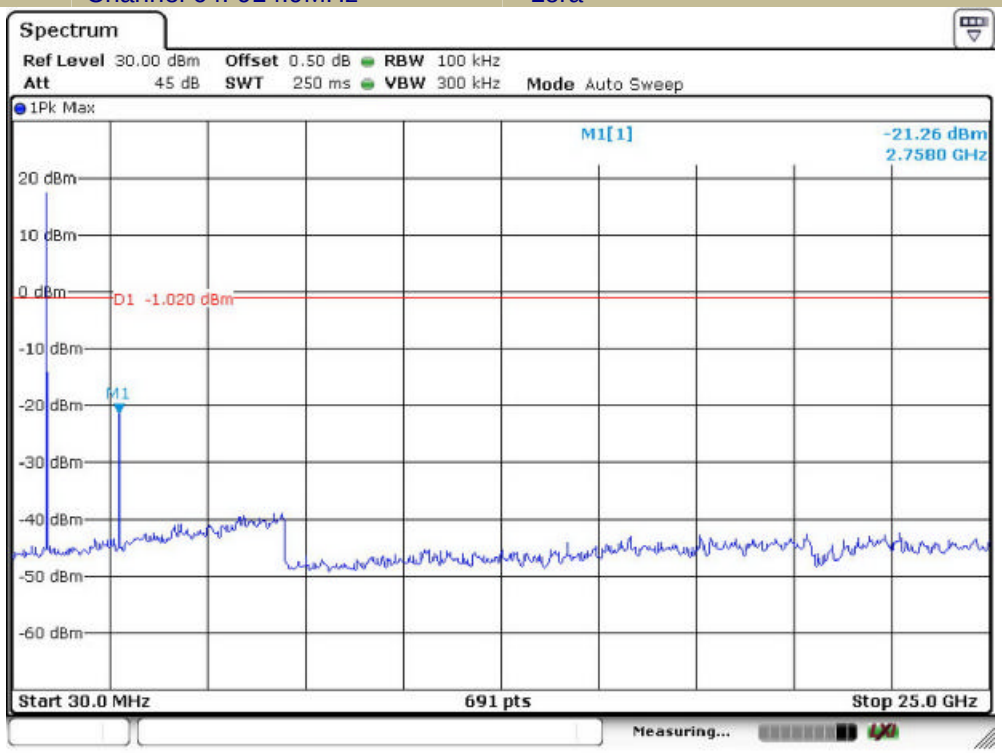

Test Model	Band-edge Conducted Emissions 915M Channel 64: 914.9MHz Lora

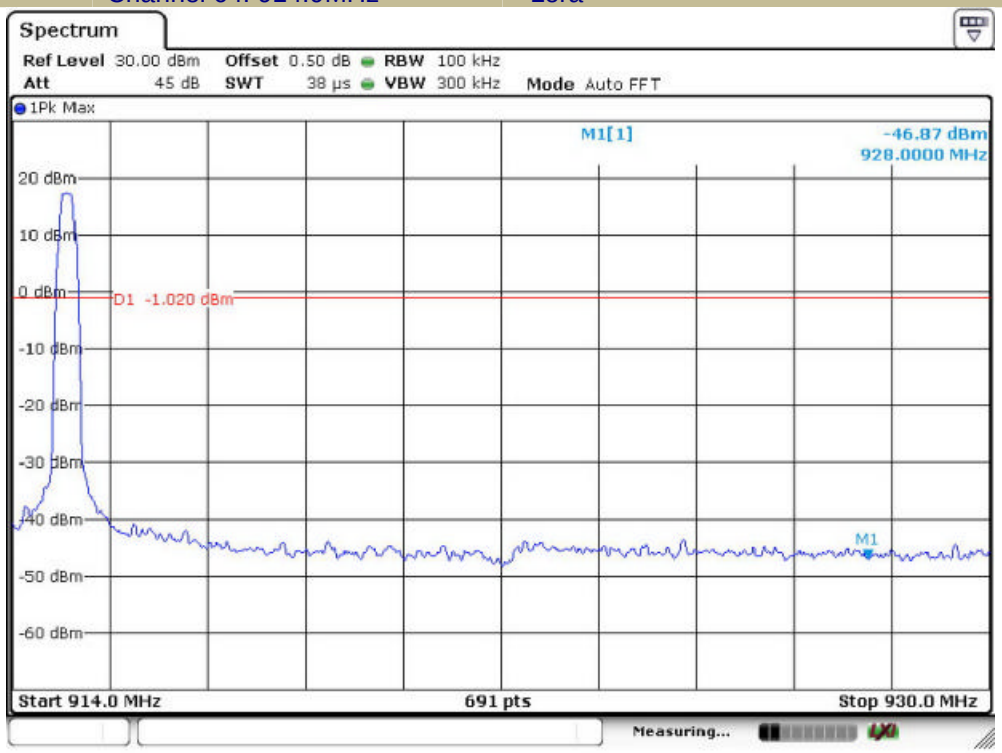

7.7 RADIATED SPURIOUS EMISSION

7.7.1 Applicable Standard

According to FCC Part 15.247(d) and 15.209 and KDB 558074 D01 15.247 MEAS GUIDANCE v05r02

7.7.2 Conformance Limit

According to FCC Part 15.247(d): radiated emissions which fall in the restricted bands, as defined in §15.205(a), must also comply with the radiated emission limits specified in §15.209(a) (see §15.205(c)).
According to FCC Part15.205, Restricted bands

MHz	MHz	MHz	GHz
0.090-0.110	16.42-16.423	399.9-410	4.5-5.15
10.495-0.505	16.69475-16.69525	608-614	5.35-5.46
2.1735-2.1905	16.80425-16.80475	960-1240	7.25-7.75
4.125-4.128	25.5-25.67	1300-1427	8.025-8.5
4.17725-4.17775	37.5-38.25	1435-1626.5	9.0-9.2
4.20725-4.20775	73-74.6	1645.5-1646.5	9.3-9.5
6.215-6.218	74.8-75.2	1660-1710	10.6-12.7
6.26775-6.26825	123-138	2200-2300	14.47-14.5
8.291-8.294	149.9-150.05	2310-2390	15.35-16.2
8.362-8.366	156.52475-156.52525	2483.5-2500	17.7-21.4
8.37625-8.38675	156.7-156.9	2690-2900	22.01-23.12
8.41425-8.41475	162.0125-167.17	3260-3267	23.6-24.0
12.29-12.293	167.72-173.2	3332-3339	31.2-31.8
12.51975-12.52025	240-285	3345.8-3358	36.43-36.5
12.57675-12.57725	322-335.4	3600-4400	(2)
13.36-13.41			

According to FCC Part15.205, the level of any transmitter spurious emission in Restricted bands shall not exceed the level of the emission specified in the following table

Restricted Frequency(MHz)	Field Strength (μV/m)	Field Strength (dBμV/m)	Measurement Distance
0.009-0.490	2400/F(KHz)	20 log (uV/m)	300
0.490-1.705	24000/F(KHz)	20 log (uV/m)	30
1.705-30	30	29.5	30
30-88	100	40	3
88-216	150	43.5	3
216-960	200	46	3
Above 960	500	54	3

7.7.3 Test Configuration

Test according to clause 6.2 radio frequency test setup 2

7.7.4 Test Procedure

This test is required for any spurious emission that falls in a Restricted Band, as defined in Section 15.205. It must be performed with the highest gain of each type of antenna proposed for use with the EUT. Use the following spectrum analyzer settings:
For Above 1GHz:
The EUT was placed on a turn table which is 1.5m above ground plane.
Maximum procedure was performed on the highest emissions to ensure EUT compliance.
Span = wide enough to fully capture the emission being measured
RBW = 1 MHz
VBW ≥ RBW
Sweep = auto
Detector function = peak
Trace = max hold

For Below 1GHz:
The EUT was placed on a turn table which is 0.8m above ground plane.
Maximum procedure was performed on the highest emissions to ensure EUT compliance.
Span = wide enough to fully capture the emission being measured
RBW = 100 kHz for
VBW ≥ RBW
Sweep = auto
Detector function = peak
Trace = max hold
For Below 30MHz:
The EUT was placed on a turn table which is 0.8m above ground plane.
Maximum procedure was performed on the highest emissions to ensure EUT compliance.
Span = wide enough to fully capture the emission being measured
RBW = 9kHz
VBW ≥ RBW
Sweep = auto
Detector function = peak
Trace = max hold
For Below 150KHz:
The EUT was placed on a turn table which is 0.8m above ground plane.
Maximum procedure was performed on the highest emissions to ensure EUT compliance.
Span = wide enough to fully capture the emission being measured
RBW = 200Hz
VBW ≥ RBW
Sweep = auto
Detector function = peak
Trace = max hold
Follow the guidelines in ANSI C63.10-2013 with respect to maximizing the emission by rotating the EUT, measuring the emission while the EUT is situated in three orthogonal planes (if appropriate), adjusting the measurement antenna height and polarization, etc. A pre-amp and a high pass filter are required for this test, in order to provide the measuring system with sufficient sensitivity. Allow the trace to stabilize. The peak reading of the emission, after being corrected by the antenna factor, cable loss, pre-amp gain, etc., is the peak field strength, which must comply with the limit specified in Section 15.35(b). Submit this data.
Now set the VBW to 10 Hz, while maintaining all of the other instrument settings. This peak level, once corrected, must comply with the limit specified in Section 15.209. If the dwell time per channel of the hopping signal is less than 100 ms, then the reading obtained with the 10 Hz VBW may be further adjusted by a “duty cycle correction factor”, derived from 20log(dwell time/100 ms), in an effort to demonstrate compliance with the 15.209 limit. Submit this data.
Repeat above procedures until all frequency measured was complete.

7.7.5 Test Results

- Spurious Emission below 30MHz (9KHz to 30MHz)

Temperature:	26° C
Relative Humidity:	54%
ATM Pressure:	1011 mbar

Freq. (MHz)	Ant.Pol.	Emission Level(dBuV/m)		Limit 3m(dBuV/m)		Over(dB)	
	H/V	PK	AV	PK	AV	PK	AV
--	--	--	--	--	--	--	--

Note: the amplitude of spurious emission that is attenuated by more than 20dB below the permissible limit has no need to be reported.
Distance extrapolation factor =40log(Specific distance/ test distance)(dB);
Limit line=Specific limits(dBuV) + distance extrapolation factor

■ Spurious Emission Above 1GHz (1GHz to 25GHz)

All mode have been tested, and the worst result was report as below:

Test mode:	Lora	Frequency:	Channel 1: 902.3MHz

Freq. (MHz)	Ant.Pol. H/V	Emission Level(dBuV/m) PK	Emission Level(dBuV/m) AV	Limit 3m(dBuV/m) PK	Limit 3m(dBuV/m) AV	Over(dB) PK	Over(dB) AV
1813.71	V	51.67	35.85	74	54	-22.33	-18.15
3624.06	V	50.56	33.09	74	54	-23.44	-20.91
4378.49	V	57.65	33.56	74	54	-16.35	-20.44
1807.75	H	64.49	38.62	74	54	-9.51	-15.38
3615.89	H	63.18	37.17	74	54	-10.82	-16.83
4839.07	H	53.15	33.28	74	54	-20.85	-20.72

Test mode:	Lora	Frequency:	Channel 33: 908.7MHz

Freq. (MHz)	Ant.Pol. H/V	Emission Level(dBuV/m) PK	Emission Level(dBuV/m) AV	Limit 3m(dBuV/m) PK	Limit 3m(dBuV/m) AV	Over(dB) PK	Over(dB) AV
1827.18	V	56.19	33.95	74	54	-17.81	-20.05
3643.35	V	53.00	29.32	74	54	-21.00	-24.68
4366.76	V	54.92	29.98	74	54	-19.08	-24.02
1822.60	H	65.52	40.41	74	54	-8.48	-13.59
3643.16	H	62.64	38.72	74	54	-11.36	-15.28
4841.43	H	58.70	33.84	74	54	-15.30	-20.16

Test mode:	Lora	Frequency:	Channel 64: 914.9MHz

Freq. (MHz)	Ant.Pol. H/V	Emission Level(dBuV/m) PK	Emission Level(dBuV/m) AV	Limit 3m(dBuV/m) PK	Limit 3m(dBuV/m) AV	Over(dB) PK	Over(dB) AV
1835.36	V	54.31	35.80	74	54	-19.69	-18.20
3672.98	V	57.78	35.58	74	54	-16.22	-18.42
4376.58	V	53.68	33.44	74	54	-20.32	-20.56
1833.23	H	62.93	40.87	74	54	-11.07	-13.13
3668.99	H	60.70	38.32	74	54	-13.30	-15.68
4846.19	H	54.26	37.59	74	54	-19.74	-16.41

Note: (1) All Readings are Peak Value (VBW=3MHz) and Peak Value (VBW=10Hz).
(2) Emission Level= Reading Level+Probe Factor +Cable Loss.
(3) Data of measurement within this frequency range shown " -- " in the table above means the reading of emissions are attenuated more than 20dB below the permissible limits or the field strength is too small to be measured.

■ Spurious Emission below 1GHz (30MHz to 1GHz)

All mode have been tested, and the worst result was report as below:

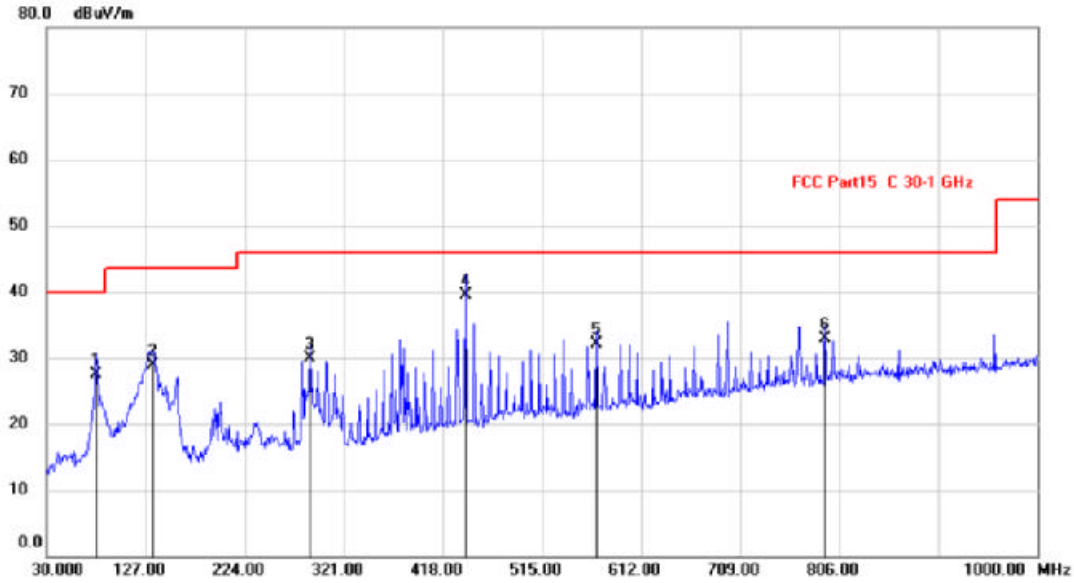

Site

Polarization: *Horizontal*

Temperature: 25.0 °C

Limit: FCC Part15 C 30-1 GHz

Power: AC 120 V/60 Hz

Humidity: 58 %

Mode: Hopping

Note:

No.	Mk.	Freq.	Reading Level	Correct Factor	Measure-ment	Limit	Over	
		MHz	dBuV	dB	dBuV/m	dBuV/m	dB	Detector
1		78.5000	47.92	-20.42	27.50	40.00	-12.50	QP
2		133.7899	49.27	-20.29	28.98	43.50	-14.52	QP
3		288.0200	45.09	-15.20	29.89	46.00	-16.11	QP
4	*	440.3100	51.17	-11.64	39.53	46.00	-6.47	QP
5		568.3500	41.31	-9.25	32.06	46.00	-13.94	QP
6		792.4200	38.39	-5.58	32.81	46.00	-13.19	QP

*:Maximum data x:Over limit !:over margin ¡´Reference Only

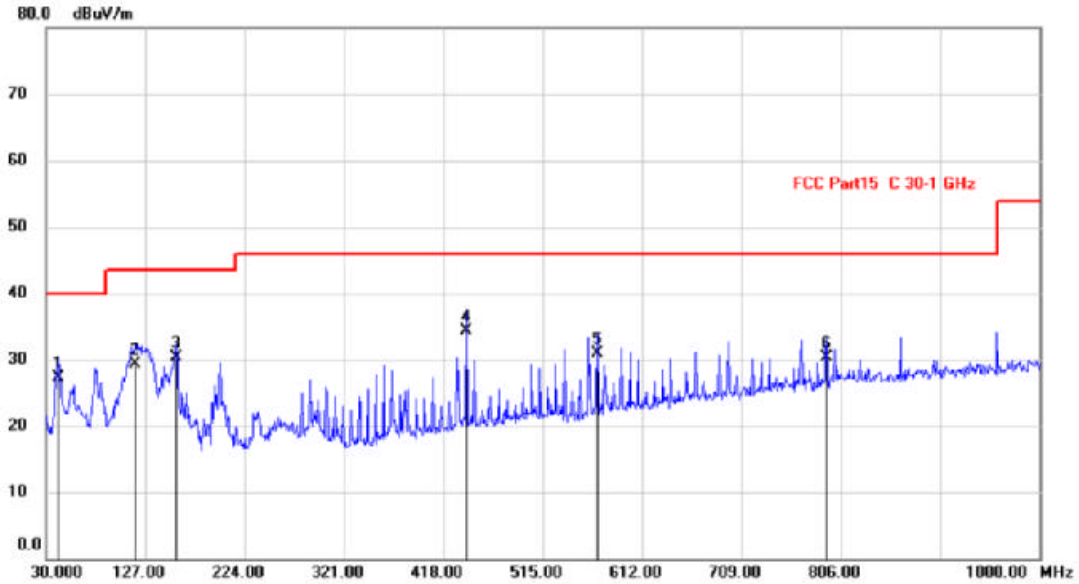

Site
Limit: FCC Part15 C 30-1 GHz
Mode: Hopping
Note:

Polarization: *Vertical*
Power: AC 120 V/60 Hz

Temperature: 25.0 °C
Humidity: 58 %

No.	Mk.	Freq.	Reading Level	Correct Factor	Measure-ment	Limit	Over	
		MHz	dBuV	dB	dBuV/m	dBuV/m	dB	Detector
1		42.6100	44.33	-16.95	27.38	40.00	-12.62	QP
2		117.3000	48.71	-19.33	29.38	43.50	-14.12	QP
3		157.0700	50.80	-20.42	30.38	43.50	-13.12	QP
4	*	440.3100	45.95	-11.64	34.31	46.00	-11.69	QP
5		568.3500	40.16	-9.25	30.91	46.00	-15.09	QP
6		792.4200	35.85	-5.58	30.27	46.00	-15.73	QP

*:Maximum data x:Over limit !:over margin ¡´Reference Only

7.8 CONDUCTED EMISSION TEST

7.8.1 Applicable Standard

According to FCC Part 15.207(a)

7.8.2 Conformance Limit

Conducted Emission Limit		
Frequency(MHz)	Quasi-peak	Average
0.15-0.5	66-56	56-46
0.5-5.0	56	46
5.0-30.0	60	50
Note: 1. The lower limit shall apply at the transition frequencies 2. The limit decreases in line with the logarithm of the frequency in the range of 0.15 to 0.50MHz.		

Remark: Test results were obtained from the following equation:
Measurement (dBμV) = LISN Factor (dB) + Cable Loss (dB) + Reading (dBμV)
Over (dB) = Measurement (dBμV) - Limit (dBμV)

7.8.3 Test Configuration

Test according to clause 6.3 conducted emission test setup

7.8.4 Test Procedure

The EUT was placed on a table which is 0.8m above ground plane.
Maximum procedure was performed on the highest emissions to ensure EUT compliance.
Repeat above procedures until all frequency measured were complete.

7.8.5 Test Results

Pass

All mode been tested, and the worst result recorded was report as below:

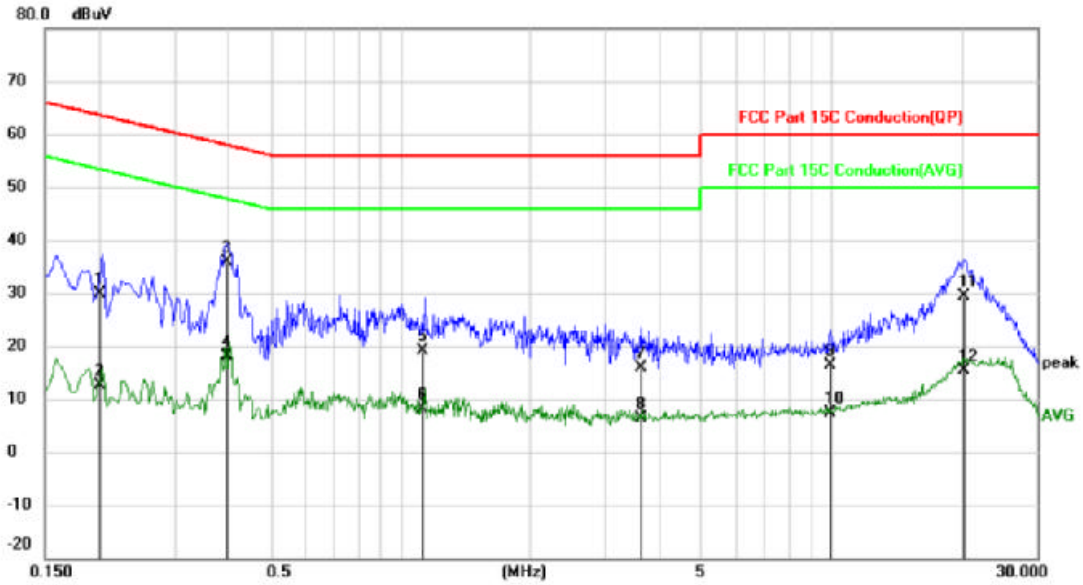

Site Phase: N Temperature: 22.6 °C

Limit: FCC Part 15C Conduction(QP) Power: AC 120 V/60 Hz Humidity: 49 %

Mode: Hopping

Note:

No.	Mk.	Freq.	Reading Level	Correct Factor	Measure-ment	Limit	Over		
		MHz	dBuV	dB	dBuV	dBuV	dB	Detector	Comment
1		0.2002	19.73	10.05	29.78	63.60	-33.82	QP	
2		0.2002	2.56	10.05	12.61	53.60	-40.99	AVG	
3	*	0.3970	25.76	10.06	35.82	57.92	-22.10	QP	
4		0.3970	7.97	10.06	18.03	47.92	-29.89	AVG	
5		1.1337	9.12	10.12	19.24	56.00	-36.76	QP	
6		1.1337	-1.94	10.12	8.18	46.00	-37.82	AVG	
7		3.6056	5.81	10.17	15.98	56.00	-40.02	QP	
8		3.6056	-3.75	10.17	6.42	46.00	-39.58	AVG	
9		9.9376	6.09	10.39	16.48	60.00	-43.52	QP	
10		9.9376	-3.01	10.39	7.38	50.00	-42.62	AVG	
11		20.2860	18.65	10.75	29.40	60.00	-30.60	QP	
12		20.2860	4.65	10.75	15.40	50.00	-34.60	AVG	

*:Maximum data x:Over limit !:over margin ¡´Reference Only

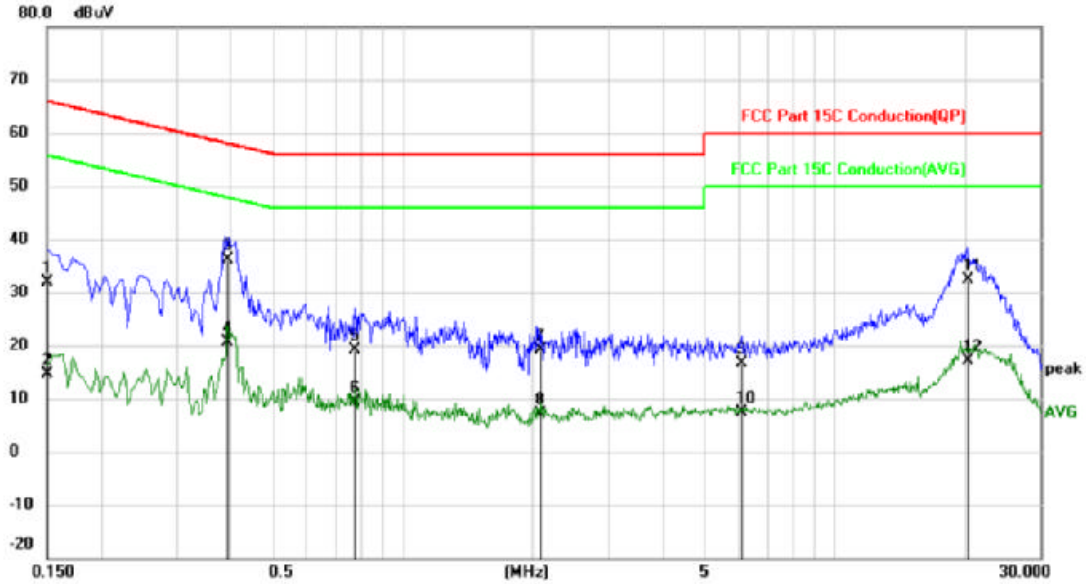

Site Phase: L1 Temperature: 22.5 °C

Limit: FCC Part 15C Conduction(QP) Power: AC 120 V/60 Hz Humidity: 49 %

Mode: Hopping

Note:

No.	Mk.	Freq.	Reading Level	Correct Factor	Measure-ment	Limit	Over		
		MHz	dBuV	dB	dBuV	dBuV	dB	Detector	Comment
1		0.1511	21.84	10.04	31.88	65.94	-34.06	QP	
2		0.1511	4.52	10.04	14.56	55.94	-41.38	AVG	
3	*	0.3918	25.99	10.06	36.05	58.03	-21.98	QP	
4		0.3918	10.55	10.06	20.61	48.03	-27.42	AVG	
5		0.7788	8.95	10.12	19.07	56.00	-36.93	QP	
6		0.7788	-0.73	10.12	9.39	46.00	-36.61	AVG	
7		2.0896	8.92	10.13	19.05	56.00	-36.95	QP	
8		2.0896	-2.93	10.13	7.20	46.00	-38.80	AVG	
9		6.0913	6.30	10.24	16.54	60.00	-43.46	QP	
10		6.0913	-2.78	10.24	7.46	50.00	-42.54	AVG	
11		20.3908	21.62	10.75	32.37	60.00	-27.63	QP	
12		20.3908	6.31	10.75	17.06	50.00	-32.94	AVG	

*:Maximum data x:Over limit !:over margin ¡´Reference Only

7.9 ANTENNA APPLICATION

7.9.1 Antenna Requirement

Standard	Requirement
FCC CRF Part 15.203	An intentional radiator shall be designed to ensure that no antenna other than that furnished by the responsible party shall be used with the device. The use of a permanently attached antenna or of an antenna that uses a unique coupling to the intentional radiator shall be considered sufficient to comply with the provisions of this section. The manufacturer may design the unit so that a broken antenna can be replaced by the user, but the use of a standard antenna jack or electrical connector is prohibited. This requirement does not apply to carrier current devices or to devices operated under the provisions of §15.211, §15.213, §15.217, §15.219, or §15.221. Further, this requirement does not apply to intentional radiators that must be professionally installed, such as perimeter protection systems and some field disturbance sensors, or to other intentional radiators which, in accordance with §15.31(d), must be measured at the installation site. However, the installer shall be responsible for ensuring that the proper antenna is employed so that the limits in this part are not exceeded.

For intentional device, according to FCC 47 CFR Section 15.203, an intentional radiator shall be designed to ensure that no antenna other than that furnished by the responsible party shall be used with the device. And according to FCC 47 CFR Section 15.247 (b), if transmitting antennas of directional gain greater than 6dBi are used, the power shall be reduced by the amount in dB that the directional gain of the antenna exceeds 6dBi.

7.9.2 Result

PASS.

The EUT has 1 antenna: a External Antenna for Lora mode, the gain is 3 dBi;

Note: ☐ Antenna use a permanently attached antenna which is not replaceable.
☒ Not using a standard antenna jack or electrical connector for antenna replacement
☐ The antenna has to be professionally installed (please provide method of installation)

which in accordance to section 15.203, please refer to the internal photos.

--------- END OF REPORT --------