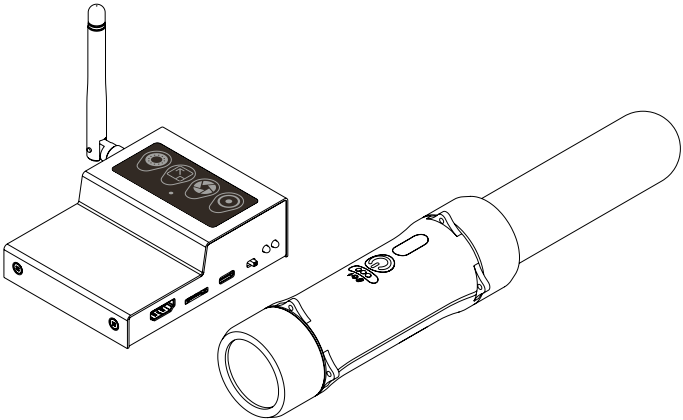

Trident 101

Wireless Spy Fishing Camera

User Manual

Product Package Content

After the product package is opened, please check whether or not all items in the package are intact and complete.
In case of any shortage or damage of items, please contact the dealer immediately.

- **Wireless Spy Fishing Camera---X 1**
- **Wireless Spy Fishing Camera (Receiver)---X 1**
- **18650 Lithium Battery---X 1**

Product Feature Introduction

Wireless Spy Fishing Camera (Referred to as "TX")

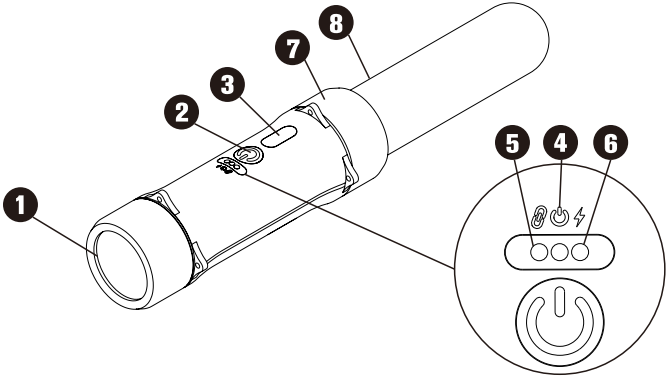

1 Camera Lens

Prior to recording, please ensure that the lens surface is clean.

2 Power Key

Press this key to turn the device on/off.

3 Charger Waterproof Protective Cap (USB Type C)

Charging socket is inside the device and provides a charging function when the 18650 battery is installed.
During use, please do not damage the protective cap to ensure that the device waterproof function.

4 Power Indicator

Constant Green Light:
Device is turned on and is under the standby state.

❺ RF Connection State Indicator

Constant Green Light : connection is proper.
(Automatic Connection)
Flickering Green Light : connection is poor.

❻ Battery Charging Indicator

Constant Red Light : charging is in process.
Constant Green Light : charging is complete.

❼ Rear Cover

Rotate to open the rear cover for replacement of the 18650 lithium battery.

❽ Antenna Float Unit

During video recording, please prevent this part from being shielded by foreign objects that may affect the antenna performance.

Battery Installation

Rotate to open ❼ rear cover and push ❽ antenna float unit rearward. Confirm the battery positive and negative electrode directions and place the battery into the device.
Align ❽ with the positioning structure and fasten ❼ back to the device. Please be sure to fasten the device firmly to ensure the waterproof function.

* Attention: please do not damage or remove the waterproof silicon seal ring to prevent any impact on the device waterproof function*

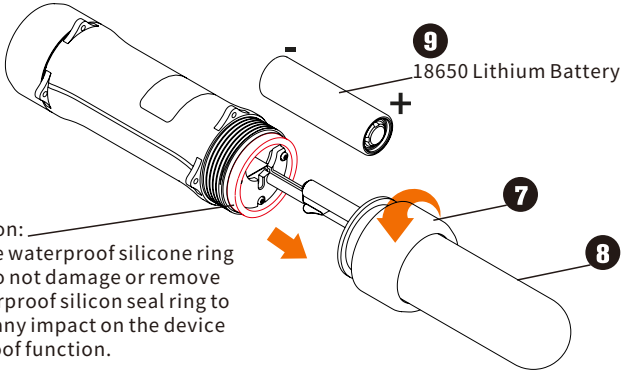

Product Feature Introduction

Wireless Spy Fishing Camera (Receiver) (Referred to as "RX")

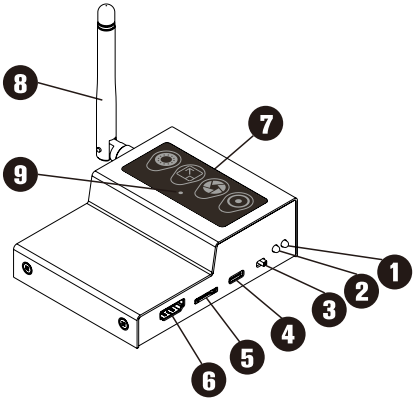

❶ Power Indicator

Constant Blue Light : Device is turned on and is under the standby state.

❷ RF Connection State Indicator

Constant Blue Light : Connection is proper. (Automatic Connection).

Flickering Blue Light : Connection is poor.

❸ Power Key

Toggle this key to turn the device on/off.

❹ USB Type C Port

Connect to transmission cable for power supply and video transmission.

❺ Memory Card Slot

Please insert user's own Micro SD memory card.
(Maximum of 128GB Supported)

❻ HDMI Port

Connect to transmission cable . (video transmission).

❼ Touch Pad

For monitor viewing and operation of various functions.

❽ External Antenna

Receive image signals transmitted from TX end

❾ Touch Indicator

Flashing Red Light : Single click for more than 0.5 second and then release to feed back the operating action.

Antenna Device

❽ The antenna device is professional assembly, users can not change antenna by yourself.

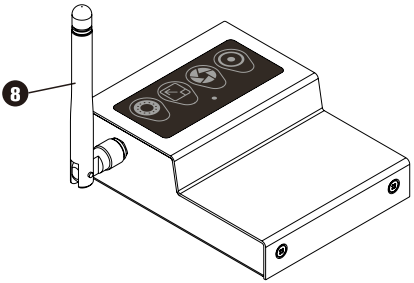

Insert Memory Card

Wireless Spy Fishing Camera (Receiver) - RX

Attention: Before inserting a new memory card into the device for the first time, it is necessary to complete the formatting first, in order to ensure the normal function use.

Prior to the use of the device, it is required to insert a memory card in order to use the video recording and photo shooting function.

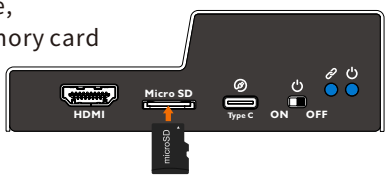

Please hold the edge of Micro SD card and please be aware of the label direction. Insert the card with the connector end toward the slot until the memory card is secured inside the slot.

To remove the card, grab the edge of the card, and pull the card out.

Note:

- Prior to the use of the device, please format the memory card first in order to prevent any system instability due to file not recorded by the present device.
- When the device is under the turn-on state, please do not remove the memory card directly. To remove the memory card, it is suggested that you turn off the device first, in order to prevent damage of the file recorded in the memory card.
- Our company's product does not guarantee the compatibility with all types of Micro SD memory cards.
- In case of any failure of memory card, please contact the memory card manufacturer.
- Please do not place the memory card at humid or moist area, such as contact with high moisture object or corrosive object.
  Please prevent placement at high temperature area, such as area with direct sunlight exposure or area adjacent to device with heating function.
- Please check the memory card periodically to determine if there is a need to perform formatting or replacement with a new card.

Hardware Connection

Wireless Spy Fishing Camera (Receiver) - RX

Method 1:

Connect to TV Monitor

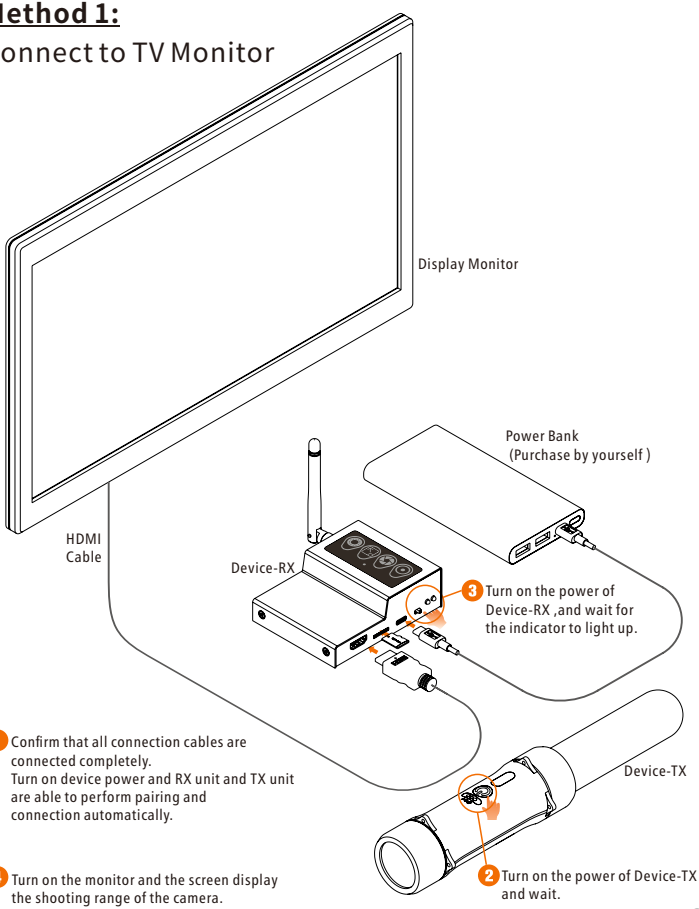

Hardware Connection

Method 2: Connect to Mobile Phone or Tablet (Presently, only Android system is supported.)

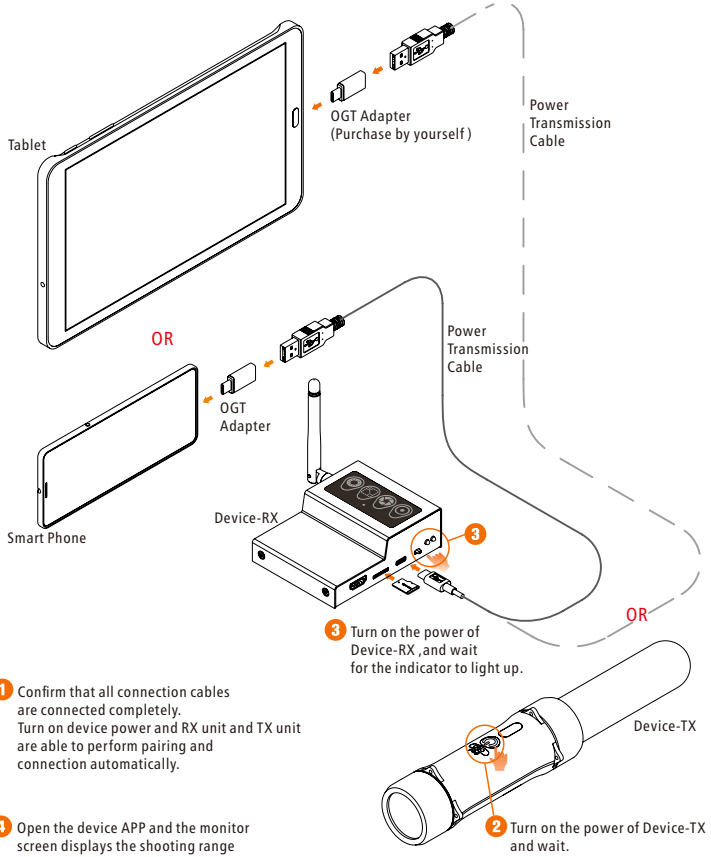

1 Confirm that all connection cables are connected completely.
Turn on device power and RX unit and TX unit are able to perform pairing and connection automatically.

4 Open the device APP and the monitor screen displays the shooting range of the camera.

Hardware Connection

Method 3: Connect to Mobile Phone or Tablet (Type-Y Male/Female Connection Cable)

When the device is for long-term outdoor use, to prevent insufficient power of the mobile phone or tablet,
it is suggested to use a Type-Y Male/Female Connection Cable (optional) for connection to a mobile power source (optional).

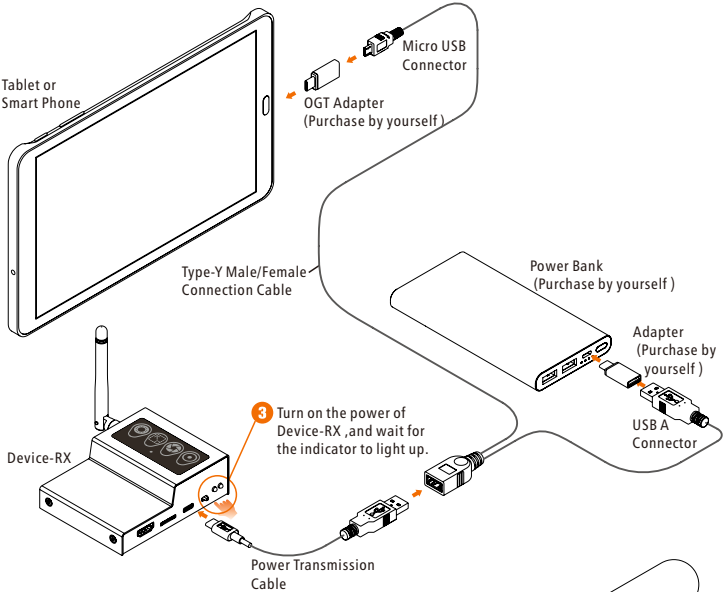

1 Confirm that all connection cables are connected completely.
Turn on device power and RX unit and TX unit are able to perform pairing and connection automatically.

4 Open the device APP and the monitor screen displays the shooting range of the camera.

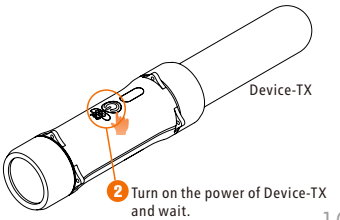

Hardware Operations

Wireless Spy Fishing Camera - TX

Power On

Touch the power key gently, the indicator is lit up and the device is ready for operations.

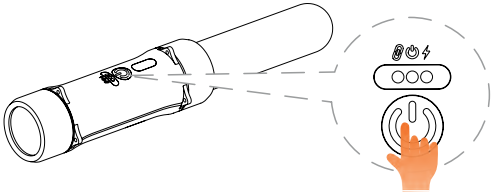

Power Off

Long press the power key for 3~5 seconds, the indicator goes off and the device is turned off.

Charging

The device uses 18650 lithium battery for the supply of power. Prior to the use under standby state, please charge the battery completely.
When a transformer is used for charging, please ensure that there is no water on the device surface and it is under a dry environment.

1. Open the waterproof cap on the device.
   Please use a power transformer (5V DC/2.0A, not provided as an accessory).
2. Use a conventional USB Type-C transmission cable.
   Connect one end to the device Type-C port and the other end to the power transformer in order to perform charging.

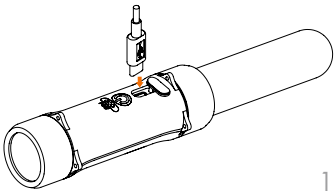

Hardware Interface Operations

Wireless Spy Fishing Camera (Receiver) - RX

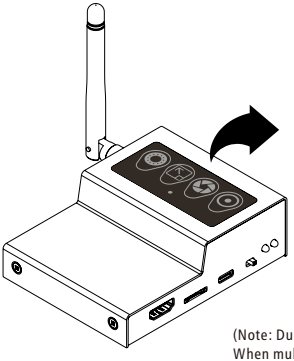

1. Fill Light Key
2. Zoom-in Key
3. Photo Key
4. Video Rec Key

(Note: During operations, only one single key can be clicked on.
When multiple keys are pressed at the same time, device error may occur*)

1 Fill Light Key-TX unit fill light brightness adjustment

Press this single key for more than 0.5 second and then release the key, and the red light is lit up.
Standby State, Light OFF>25%>50%>75%>100%>OFF

2 Zoom-in Key-TX unit camera lens zoom-in adjustment

Press this single key for more than 0.5 second and then release the key, and the red light is lit up.
Standby state, Camera Lens 1x > 1.5x > 2x > 1x

3 Photo Key

Press this single key for more than 0.5 second and then release the key, and the red light is lit up.
Photos are saved in the SD card.
(MicroSD must be inserted into the RX unit to take photos.)

❹ Video Rec Key

Press this single key for more than 0.5 second and then release the key, and the red light is lit up.
Videos are saved in the SD card.
(MicroSD must be inserted into the RX unit to record videos.)

Screen Interface Introduction

User can use the "TV Monitor" to view the camera screen directly and the status bar on the top to determine the TX unit status.

：indicates the power level of the TX unit.

：indicates the connection quality of the RX unit.

"Capture" on top right corner ：
indicates the device is now in Photo Shooting Mode.

"REC" on top right corner ：
indicates the device is now in Video Recording Mode.

User can also use the "Smart phone or Tablet" to view the camera screen directly and to determine the TX unit status.

Prior to use a smart phone or tablet computer to view the camera screen, please go to Google Play store to download the "USB Camera" App (this App is a freeware)

To connect the device for the first time, please simply follow the App instructions to complete initial setting.
Once connection is made, for subsequent connections in the future, the device will be connected automatically.

Memory Card Formatting

Wireless Spy Fishing Camera (Receiver) - RX

Attention: Before inserting a new memory card into the device for the first time, it is necessary to complete the formatting first, in order to ensure the normal function use.

After connecting the RX unit to a monitor equipment, power on and connecting the screen to the monitor, user can use two fingers to press the two keys of ❶ Fill Light Key and ❷ Zoom-in Key simultaneously for approximately 5 seconds.
The monitor screen then displays "SD Card Format" and the format is complete.

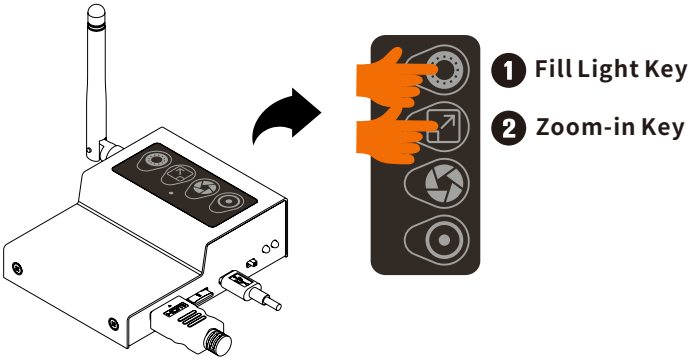

Safety Regulations

FCC Statement:
Federal Communication Commission Interference Statement
This equipment has been tested and found to comply with the limits for a Class B digital device, pursuant to Part 15 of the FCC Rules.
These limits are designed to provide reasonable protection against harmful interference in a residential installation. This equipment generates, uses and can radiate radio frequency energy and, if not installed and used in accordance with the instructions, may cause harmful interference to radio communications. However, there is no guarantee that interference will not occur in a particular installation.
If this equipment does cause harmful interference to radio or television reception, which can be determined by turning the equipment off and on, the user is encouraged to try to correct the interference by one of the following measures:

- Reorient or relocate the receiving antenna.
- Increase the separation between the equipment and receiver.
- Connect the equipment into an outlet on a circuit different from that to which the receiver is connected.
- Consult the dealer or an experienced radio/TV technician for help.

FCC Caution: Any changes or modifications not expressly approved by the party responsible for compliance could void the user's authority to operate this equipment.

This device complies with Part 15 of the FCC Rules. Operation is subject to the following two conditions: (1) This device may not cause harmful interference, and (2) this device must accept any interference received, including interference that may cause undesired operation.

For product available in the USA/Canada market, only channel 1~11 can be operated.
Selection of other channels is not possible.

This device and it's antennas(s) must not be co-located or operating in conjunction with any other antenna or transmitter except in accordance with FCC multi-transmitter product procedures.

IMPORTANT NOTE:
FCC Radiation Exposure Statement:
This equipment complies with FCC radiation exposure limits set forth for an uncontrolled environment.
This equipment should be installed and operated with minimum distance 20cm
between the radiator & your body.

Product Info.

Wireless Spy Fishing Camera
Product Name : Wireless Spy Fishing Camera
Model No. : Trident 101
FCC ID: 2A2CB-0000011000101

Wireless Spy Fishing camera (Receiver)
Product Name :Wireless Spy Fishing Camera (Receiver)
Model No. : Trident 101
FCC ID : 2A2CB-0000011000102

Product Warranty

We thank you for choosing Trident 101 product.
From the date of your purchase, you are entitled to warranty services satisfying the following conditions:

Within seven days after the purchase of the device, in case you discover any defect or failure, you may choose to return or exchange the device.
After seven days of your purchase, you are entitled to a warranty period of twelve months starting from the date of purchase indicated on the invoice or warranty sticker.
Warranty card number is indicated on the product label sticker attached to the top of the box.
Consumer is required to preserve the purchase certificate or invoice properly to protect personal rights and interests.
In case where no relevant certificate can be provided, the consumer may not be entitled to enjoy the warranty benefit.

Non-warranty Scope

- Damage due to natural disaster (earthquake or lightning strike, etc.), improper storage, collision or compression under heavy load, etc.
- Counterfeit of order number, warranty card number, invoice or damaged warranty card.
- Repair or modification not made by the Company or cooperating dealer stores.
- Product damage due to improper use of water immersion, lost or compression.
- Product not sold by the Company or cooperating dealer.

Technical Support

If you have any questions on the use of the product, please contact our telephone service direct line, or please go to the FAQ / Online Solution of the G-Sau website.
Service Direct Line: +886-2-8771-0006
Online Solution: www.g-sau.com

Product Warranty

Repair Service and Warranty Clause

G-sau guarantees that all products have been tested completely in order to prevent defects of raw material and manufacturing process. In addition, all products comply with the specification announced.
For the product purchased by you is within the warranty period, in case of any defect or damage under the condition or normal use, you may contact the G-Sau dealer of your original purchase in order to request the dealer of your original purchase to send your product back to GSau for repair.

CCXXxxLPyyyZzW

Dealer Seal

吉邵股份有限公司 G-Sau Co., Ltd.

台灣總公司 10540 台北市松山區南京東路三段346-4號6樓602-2
Headquarter Rm. 602-2, 6F., No. 346-4, Sec. 3, Nanjing E. Rd., Songshan Dist., Taipei City , Taiwan (R.O.C.)

TEL： 886-2-87710006
FAX：
WEB： www.g-sau.com
E-mal：