DFS TEST REPORT

Application No.:	SHEM2106005812CR
FCC ID:	2A2CXFBXB001
Applicant:	Suijimanbu (SHANGHAI) Sports Technology Co. Ltd.
Address of Applicant:	1201 Building B, Greenbelt Convergence Center, 500 Yunjin Road, Xuhui District, Shanghai, China
Manufacturer:	Suijimanbu (SHANGHAI) Sports Technology Co. Ltd.
Address of Manufacturer:	1201 Building B, Greenbelt Convergence Center, 500 Yunjin Road, Xuhui District, Shanghai, China
Factory:	WNQ (Shanghai) Body-building Equipment Co.,Ltd
Address of Factory:	No. 388,Beiying Road,(No. 1588,Beiying Road,Qingpu Area,Shanghai. China
Equipment Under Test (EUT):	
EUT Name:	freebeat
Model No.:	xbike
Trade mark:	freebeat
Standard(s) :	47 CFR Part 15, Subpart E 15.407
Date of Receipt:	2021-06-09
Date of Test:	2021-06-21 to 2021-07-27
Date of Issue:	2021-07-27
Test Result:	**Pass***

* In the configuration tested, the EUT complied with the standards specified above.

Parlam Zhan
E&E Section Manager

The manufacturer should ensure that all products in series production are in conformity with the product sample detailed in this report. If the product in this report is used in any configuration other than that detailed in the report, the manufacturer must ensure the new system complies with all relevant standards. Any mention of SGS International Electrical Approvals or testing done by SGS International Electrical Approvals in connection with, distribution or use of the product described in this report must be approved by SGS International Electrical Approvals in writing.

Unless otherwise agreed in writing, this document is issued by the Company subject to its General Conditions of Service printed overleaf, available on request or accessible at http://www.sgs.com/en/Terms-and-Conditions.aspx and, for electronic format documents, subject to Terms and Conditions for Electronic Documents at http://www.sgs.com/en/Terms-and-Conditions/Terms-e-Document.aspx. Attention is drawn to the limitation of liability, indemnification and jurisdiction issues defined therein. Any holder of this document is advised that information contained hereon reflects the Company's findings at the time of its intervention only and within the limits of Client's instructions, if any. The Company's sole responsibility is to its Client and this document does not exonerate parties to a transaction from exercising all their rights and obligations under the transaction documents. This document cannot be reproduced except in full, without prior written approval of the Company. Any unauthorized alteration, forgery or falsification of the content or appearance of this document is unlawful and offenders may be prosecuted to the fullest extent of the law. Unless otherwise stated the results shown in this test report refer only to the sample(s) tested and such sample(s) are retained for 30 days only.
Attention: To check the authenticity of testing /inspection report & certificate, please contact us at telephone: (86-755) 8307 1443, or email: CN.Doccheck@sgs.com

NO.588 West Jindu Road,Songjiang District,Shanghai,China 201612 t(86-21) 61915666 f(86-21)61915678 www.sgsgroup.com.cn
中国・上海・松江区金都西路588号 邮编: 201612 t(86-21) 61915666 f(86-21)61915678 e sgs.china@sgs.com

Member of the SGS Group (SGS SA)

alteration, forgery or falsification of the content or appearance of this document is unlawful and offenders may be prosecuted to the fullest extent of the law. Unless otherwise stated the results shown in this test report refer only to the sample(s) tested and such sample(s) are retained for 30 days only.

Revision Record			
Version	**Description**	**Date**	**Remark**
00	Original	2021-07-27	/

Authorized for issue by:				
		Vincent Zhu /Project Engineer		
		Parlam Zhan / Reviewer		

This document is issued by the Company subject to its General Conditions of Service printed overleaf, available on request or accessible at http://www.sgs.com/en/Terms-and-Conditions.aspx and, for electronic format documents, subject to Terms and Conditions for Electronic Documents at http://www.sgs.com/en/Terms-and-Conditions/Terms-e-Document.aspx. Attention is drawn to the limitation of liability, indemnification and jurisdiction issues defined therein. Any holder of this document is advised that information contained hereon reflects the Company's findings at the time of its intervention only and within the limits of Client's instructions, if any. The Company's sole responsibility is to its Client and this document does not exonerate parties to a transaction from exercising all their rights and obligations under the transaction documents. This document cannot be reproduced except in full, without prior written approval of the Company. Any unauthorized alteration, forgery or falsification of the content or appearance of this document is unlawful and offenders may be prosecuted to the fullest extent of the law. Unless otherwise stated the results shown in this test report refer only to the sample(s) tested and such sample(s) are retained for 30 days only.

2 Test Summary

Item	Standard	Method	Requirement	Result
Channel Move Time	47 CFR Part 15, Subpart E 15.407	KDB 905462 D02 Section 7.8.3	KDB 905462 D02 Section 5.1	Pass
Channel Closing Transmission Time	47 CFR Part 15, Subpart E 15.407	KDB 905462 D02 Section 7.8.3	KDB 905462 D02 Section 5.1	Pass
Non-occupancy period	47 CFR Part 15, Subpart E 15.407	KDB 905462 D02 Section 7.8.3	KDB 905462 D02 Section 5.1	Pass

This document is issued by the Company subject to its General Conditions of Service printed overleaf, available on request or accessible at http://www.sgs.com/en/Terms-and-Conditions.aspx and, for electronic format documents, subject to Terms and Conditions for Electronic Documents at http://www.sgs.com/en/Terms-and-Conditions/Terms-e-Document.aspx. Attention is drawn to the limitation of liability, indemnification and jurisdiction issues defined therein. Any holder of this document is advised that information contained hereon reflects the Company's findings at the time of its intervention only and within the limits of Client's instructions, if any. The Company's sole responsibility is to its Client and this document does not exonerate parties to a transaction from exercising all their rights and obligations under the transaction documents. This document cannot be reproduced except in full, without prior written approval of the Company. Any unauthorized alteration, forgery or falsification of the content or appearance of this document is unlawful and offenders may be prosecuted to the fullest extent of the law. Unless otherwise stated the results shown in this test report refer only to the sample(s) tested and such sample(s) are retained for 30 days only.

3 Contents

Page

1 COVER PAGE **1**

2 TEST SUMMARY **3**

3 CONTENTS **4**

4 GENERAL INFORMATION **5**

4.1 DETAILS OF E.U.T 5
4.2 SUPPORT UNIT 5
4.3 TEST LOCATION 6
4.4 TEST FACILITY 6
4.5 DEVIATION FROM STANDARDS 6
4.6 ABNORMALITIES FROM STANDARD CONDITIONS 6

5 EQUIPMENT LIST **7**

6 DYNAMIC FREQUENCY SELECTION **8**

6.1 APPLICABILITY OF DFS REQUIREMENTS 8
6.2 DFS DETECTION THRESHOLDS 9
6.3 DFS RESPONSE REQUIREMENTS 9
6.4 CLIENT DEVICE REQUIREMENT 10
6.5 PARAMETERS OF RADAR TEST WAVEFORMS 11
6.5.1 Short Pulse Radar Test Waveforms 11
6.5.2 Long Pulse Radar Test Waveform 13
6.5.3 Frequency Hopping Radar Test Waveform 14
6.6 CALIBRATION OF RADAR WAVEFORM 15
6.6.1 Radar Waveform Calibration Procedure 15
6.6.2 Conducted Calibration Setup 15
6.6.3 Radar Waveform Calibration Result 16
6.7 CHANNEL MOVE TIME AND CHANNEL CLOSING TRANSMISSION TIME 17
6.7.1 Test Procedure 17
6.7.2 Test Setup 18
6.7.3 Channel Loading 18
6.7.4 Test Result 19
6.8 DFS: NON-OCCUPANCY PERIOD 21
6.8.1 Test Procedure 21
6.8.2 Test Setup 22
6.8.3 Test Result 23

This document is issued by the Company subject to its General Conditions of Service printed overleaf, available on request or accessible at http://www.sgs.com/en/Terms-and-Conditions.aspx and, for electronic format documents, subject to Terms and Conditions for Electronic Documents at http://www.sgs.com/en/Terms-and-Conditions/Terms-e-Document.aspx. Attention is drawn to the limitation of liability, indemnification and jurisdiction issues defined therein. Any holder of this document is advised that information contained hereon reflects the Company's findings at the time of its intervention only and within the limits of Client's instructions, if any. The Company's sole responsibility is to its Client and this document does not exonerate parties to a transaction from exercising all their rights and obligations under the transaction documents. This document cannot be reproduced except in full, without prior written approval of the Company. Any unauthorized alteration, forgery or falsification of the content or appearance of this document is unlawful and offenders may be prosecuted to the fullest extent of the law. Unless otherwise stated the results shown in this test report refer only to the sample(s) tested and such sample(s) are retained for 30 days only.

4 General Information

4.1 Details of E.U.T.

Power supply: 12VDC 3A by adapter
Adapter:
Model: XSG-1203000HUS
Input: 100-240VAC 50/60Hz 0.8A Max
Output: 12VDC 3A

Test voltage: AC 120V 60Hz

Operation Frequency:	Band	Mode	Frequency Range(MHz)	Number of channels
	Band 1	802.11a/n(HT20)/ac(HT20)	5180-5240	4
		802.11n(HT40)/ac(HT40)	5190-5230	2
		802.11ac(HT80)	5210	1
	Band 2A	802.11a/n(HT20)/ac(HT20)	5260-5320	4
		802.11n(HT40)/ac(HT40)	5270-5310	2
		802.11ac(HT80)	5290	1
	Band 2C	802.11a/n(HT20)/ac(HT20)	5500-5700	11
		802.11n(HT40)/ac(HT40)	5510-5670	5
		802.11ac(HT80)	5530	1
	Band 3	802.11a/n(HT20)/ac(HT20)	5745-5825	5
		802.11n(HT40)/ac(HT40)	5755-5795	2
		802.11ac(HT80)	5775	1
Modulation Type:	802.11a: OFDM (64QAM, 16QAM, QPSK, BPSK) 802.11n: OFDM (BPSK, QPSK, 16QAM, 64QAM) 802.11ac: OFDM (BPSK, QPSK, 16QAM, 64QAM, 256QAM)			
Channel Spacing:	802.11a/n(HT20)/ac(HT20): 20MHz 802.11n(HT40)/ac(HT40): 40MHz 802.11ac(HT80): 80MHz			
Antenna Gain:	2.52dBi (Provided by manufacturer)			
Antenna Type:	PIFA Antenna			
DFS Function:	Slave without Radar detection			

4.2 Support Unit

Instrument	Manufacture	Model No	Serial No
Laptop PC	Lenovo	L460	N/A
Router	Tilgin Ab	HG2504	N/A

This document is issued by the Company subject to its General Conditions of Service printed overleaf, available on request or accessible at http://www.sgs.com/en/Terms-and-Conditions.aspx and, for electronic format documents, subject to Terms and Conditions for Electronic Documents at http://www.sgs.com/en/Terms-and-Conditions/Terms-e-Document.aspx. Attention is drawn to the limitation of liability, indemnification and jurisdiction issues defined therein. Any holder of this document is advised that information contained hereon reflects the Company's findings at the time of its intervention only and within the limits of Client's instructions, if any. The Company's sole responsibility is to its Client and this document does not exonerate parties to a transaction from exercising all their rights and obligations under the transaction documents. This document cannot be reproduced except in full, without prior written approval of the Company. Any unauthorized alteration, forgery or falsification of the content or appearance of this document is unlawful and offenders may be prosecuted to the fullest extent of the law. Unless otherwise stated the results shown in this test report refer only to the sample(s) tested and such sample(s) are retained for 30 days only.

4.3 Test Location

All tests were performed at:

SGS-CSTC Standards Technical Services (Shanghai) Co., Ltd. E&E Lab

588 West Jindu Road, Xinqiao, Songjiang, 201612 Shanghai, China

Tel: +86 21 6191 5666 Fax: +86 21 6191 5678

No tests were sub-contracted.

4.4 Test Facility

The test facility is recognized, certified, or accredited by the following organizations:

• CNAS (No. CNAS L0599)

CNAS has accredited SGS-CSTC Standards Technical Services (Shanghai) Co., Ltd. to ISO/IEC 17025:2017 General Requirements for the Competence of Testing and Calibration Laboratories (CNAS-CL01 Accreditation Criteria for the Competence of Testing and Calibration Laboratories) for the competence in the field of testing.

• A2LA (Certificate No. 6332.01)

SGS-CSTC Standards Technical Services (Shanghai) Co., Ltd. is accredited by the American Association for Laboratory Accreditation(A2LA).

• FCC (Designation Number: CN1301)

SGS-CSTC Standards Technical Services (Shanghai) Co., Ltd. has been recognized as an accredited testing laboratory.

• ISED (CAB Identifier: CN0020)

SGS-CSTC Standards Technical Services (Shanghai) Co., Ltd. EMC Laboratory has been recognized by Innovation, Science and Economic Development Canada (ISED) as an accredited testing laboratory. Company Number: 8617A

• VCCI (Member No.: 3061)

The 3m Semi-anechoic chamber and Shielded Room of SGS-CSTC Standards Technical Services (Shanghai) Co., Ltd. has been registered in accordance with the Regulations for Voluntary Control Measures with Registration No.: R-13868, C-14336, T-12221, G-10830 respectively.

4.5 Deviation from Standards

None

4.6 Abnormalities from Standard Conditions

None

This document is issued by the Company subject to its General Conditions of Service printed overleaf, available on request or accessible at http://www.sgs.com/en/Terms-and-Conditions.aspx and, for electronic format documents, subject to Terms and Conditions for Electronic Documents at http://www.sgs.com/en/Terms-and-Conditions/Terms-e-Document.aspx. Attention is drawn to the limitation of liability, indemnification and jurisdiction issues defined therein. Any holder of this document is advised that information contained hereon reflects the Company's findings at the time of its intervention only and within the limits of Client's instructions, if any. The Company's sole responsibility is to its Client and this document does not exonerate parties to a transaction from exercising all their rights and obligations under the transaction documents. This document cannot be reproduced except in full, without prior written approval of the Company. Any unauthorized alteration, forgery or falsification of the content or appearance of this document is unlawful and offenders may be prosecuted to the fullest extent of the law. Unless otherwise stated the results shown in this test report refer only to the sample(s) tested and such sample(s) are retained for 30 days only.

5 Equipment List

Equipment	Manufacturer	Model No	Inventory No	Cal Date	Cal Due Date
Spectrum Analyzer	R&S	FSP-30	SHEM002-1	2020-12-20	2021-12-19
Spectrum Analyzer	Agilent	N9020A	SHEM181-1	2020-08-13	2021-08-12
Signal Generator	Agilent	N5182A	SHEM182-1	2020-08-13	2021-08-12
Communication Tester	R&S	CMW270	SHEM183-1	2020-08-13	2021-08-12
Switcher	Tonscend	JS0806	SHEM184-1	2020-08-13	2021-08-12
Splitter	Anritsu	MA1612A	SHEM185-1	/	/
Coupler	e-meca	803-S-1	SHEM186-1	/	/
Conducted test Cable	/	RF01~RF04	/	2020-12-20	2021-12-19

This document is issued by the Company subject to its General Conditions of Service printed overleaf, available on request or accessible at http://www.sgs.com/en/Terms-and-Conditions.aspx and, for electronic format documents, subject to Terms and Conditions for Electronic Documents at http://www.sgs.com/en/Terms-and-Conditions/Terms-e-Document.aspx. Attention is drawn to the limitation of liability, indemnification and jurisdiction issues defined therein. Any holder of this document is advised that information contained hereon reflects the Company's findings at the time of its intervention only and within the limits of Client's instructions, if any. The Company's sole responsibility is to its Client and this document does not exonerate parties to a transaction from exercising all their rights and obligations under the transaction documents. This document cannot be reproduced except in full, without prior written approval of the Company. Any unauthorized alteration, forgery or falsification of the content or appearance of this document is unlawful and offenders may be prosecuted to the fullest extent of the law. Unless otherwise stated the results shown in this test report refer only to the sample(s) tested and such sample(s) are retained for 30 days only.

6 Dynamic Frequency Selection

6.1 Applicability of DFS requirements

Table 1: Applicability of DFS Requirements Prior to Use of a Channel

Requirement	Operational Mode		
	☐Master	☒Client Without Radar Detection	☐Client with Radar Detection
Non-Occupancy Period	Yes	Not required	Yes
DFS Detection Threshold	Yes	Not required	Yes
Channel Availability Check Time	Yes	Not required	Not required
U-NII Detection Bandwidth	Yes	Not required	Yes

Table 2: Applicability of DFS requirements during normal operation

Requirement	Operational Mode	
	☐Master Device or Client with Radar Detection	☒Client Without Radar Detection
DFS Detection Threshold	Yes	Not required
Channel Closing Transmission Time	Yes	Yes
Channel Move Time	Yes	Yes
U-NII Detection Bandwidth	Yes	Not required

Additional requirements for devices with multiple bandwidth modes	☐Master Device or Client with Radar Detection	☒Client Without Radar Detection
U-NII Detection Bandwidth and Statistical Performance Check	All BW modes must be tested	Not required
Channel Move Time and Channel Closing Transmission Time	Test using widest BW mode available	Test using the widest BW mode available for the link
All other tests	Any single BW mode	Not required
Note: Frequencies selected for statistical performance check (Section 7.8.4) should include several frequencies within the radar detection bandwidth and frequencies near the edge of the radar detection bandwidth. For 802.11 devices, it is suggested to select frequencies in each of the bonded 20 MHz channels and the channel center frequency.		

This document is issued by the Company subject to its General Conditions of Service printed overleaf, available on request or accessible at http://www.sgs.com/en/Terms-and-Conditions.aspx and, for electronic format documents, subject to Terms and Conditions for Electronic Documents at http://www.sgs.com/en/Terms-and-Conditions/Terms-e-Document.aspx. Attention is drawn to the limitation of liability, indemnification and jurisdiction issues defined therein. Any holder of this document is advised that information contained hereon reflects the Company's findings at the time of its intervention only and within the limits of Client's instructions, if any. The Company's sole responsibility is to its Client and this document does not exonerate parties to a transaction from exercising all their rights and obligations under the transaction documents. This document cannot be reproduced except in full, without prior written approval of the Company. Any unauthorized alteration, forgery or falsification of the content or appearance of this document is unlawful and offenders may be prosecuted to the fullest extent of the law. Unless otherwise stated the results shown in this test report refer only to the sample(s) tested and such sample(s) are retained for 30 days only.

6.2 DFS Detection Thresholds

Table 3: DFS Detection Thresholds for Master Devices and Client Devices With Radar Detection

Maximum Transmit Power	Value (See Notes 1, 2, and 3)
EIRP ≥ 200 milliwatt	-64 dBm
EIRP < 200 milliwatt and power spectral density < 10 dBm/MHz	-62 dBm
EIRP < 200 milliwatt that do not meet the power spectral density requirement	-64 dBm

Note 1: This is the level at the input of the receiver assuming a 0 dBi receive antenna.

Note 2: Throughout these test procedures an additional 1 dB has been added to the amplitude of the test transmission waveforms to account for variations in measurement equipment. This will ensure that the test signal is at or above the detection threshold level to trigger a DFS response.

Note3: EIRP is based on the highest antenna gain. For MIMO devices refer to KDB Publication 662911 D01.

6.3 DFS Response Requirements

Table 4: DFS Response Requirement Values

Parameter	Value
Non-occupancy period	Minimum 30 minutes
Channel Availability Check Time	60 seconds
Channel Move Time	10 seconds See Note 1.
Channel Closing Transmission Time	200 milliseconds + an aggregate of 60 milliseconds over remaining 10 second period. See Notes 1 and 2.
U-NII Detection Bandwidth	Minimum 100% of the U-NII 99% transmission power bandwidth. See Note 3.

Note 1: *Channel Move Time* and the *Channel Closing Transmission Time* should be performed with Radar Type 0. The measurement timing begins at the end of the Radar Type 0 burst.

Note 2: The *Channel Closing Transmission Time* is comprised of 200 milliseconds starting at the beginning of the *Channel Move Time* plus any additional intermittent control signals required facilitating a *Channel* move (an aggregate of 60 milliseconds) during the remainder of the 10 second period. The aggregate duration of control signals will not count quiet periods in between transmissions.

Note 3: During the *U-NII Detection Bandwidth* detection test, radar type 0 should be used. For each frequency step the minimum percentage of detection is 90 percent. Measurements are performed with no data traffic.

This document is issued by the Company subject to its General Conditions of Service printed overleaf, available on request or accessible at http://www.sgs.com/en/Terms-and-Conditions.aspx and, for electronic format documents, subject to Terms and Conditions for Electronic Documents at http://www.sgs.com/en/Terms-and-Conditions/Terms-e-Document.aspx. Attention is drawn to the limitation of liability, indemnification and jurisdiction issues defined therein. Any holder of this document is advised that information contained hereon reflects the Company's findings at the time of its intervention only and within the limits of Client's instructions, if any. The Company's sole responsibility is to its Client and this document does not exonerate parties to a transaction from exercising all their rights and obligations under the transaction documents. This document cannot be reproduced except in full, without prior written approval of the Company. Any unauthorized alteration, forgery or falsification of the content or appearance of this document is unlawful and offenders may be prosecuted to the fullest extent of the law. Unless otherwise stated the results shown in this test report refer only to the sample(s) tested and such sample(s) are retained for 30 days only.

6.4 Client Device Requirement

a) A Client Device will not transmit before having received appropriate control signals from a Master Device.

b) A Client Device will stop all its transmissions whenever instructed by a Master Device to which it is associated and will meet the Channel Move Time and Channel Closing Transmission Time requirements. The Client Device will not resume any transmissions until it has again received control signals from a Master Device.

c) If a Client Device is performing In-Service Monitoring and detects a Radar Waveform above the DFS Detection Threshold, it will inform the Master Device. This is equivalent to the Master Device detecting the Radar Waveform and d) through f) of section 5.1.1 apply.

d) Irrespective of Client Device or Master Device detection the Channel Move Time and Channel Closing Transmission Time requirements remain the same.

e) The client test frequency must be monitored to ensure no transmission of any type has occurred for 30 minutes. Note: If the client moves with the master, the device is considered compliant if nothing appears in the client non-occupancy period test. For devices that shut down (rather than moving channels), no beacons should appear.

Remark: The device under test is moves frequency with the master

This document is issued by the Company subject to its General Conditions of Service printed overleaf, available on request or accessible at http://www.sgs.com/en/Terms-and-Conditions.aspx and, for electronic format documents, subject to Terms and Conditions for Electronic Documents at http://www.sgs.com/en/Terms-and-Conditions/Terms-e-Document.aspx. Attention is drawn to the limitation of liability, indemnification and jurisdiction issues defined therein. Any holder of this document is advised that information contained hereon reflects the Company's findings at the time of its intervention only and within the limits of Client's instructions, if any. The Company's sole responsibility is to its Client and this document does not exonerate parties to a transaction from exercising all their rights and obligations under the transaction documents. This document cannot be reproduced except in full, without prior written approval of the Company. Any unauthorized alteration, forgery or falsification of the content or appearance of this document is unlawful and offenders may be prosecuted to the fullest extent of the law. Unless otherwise stated the results shown in this test report refer only to the sample(s) tested and such sample(s) are retained for 30 days only.

6.5 Parameters of radar test Waveforms

This section provides the parameters for required test waveforms, minimum percentage of successful detections, and the minimum number of trials that must be used for determining DFS conformance. Step intervals of 0.1 microsecond for Pulse Width, 1 microsecond for PRI, 1 MHz for chirp width and 1 for the number of pulses will be utilized for the random determination of specific test waveforms.

6.5.1 Short Pulse Radar Test Waveforms

Table 5 Short Pulse Radar Test Waveforms

Radar Type	Pulse Width (μsec)	PRI (μsec)	Number of Pulses	Minimum Percentage of Successful Detection	Minimum Number of Trials
0	1	1428	18	See Note 1	See Note 1
1	1	Test A	$\text{Roundup}\left\{\left(\frac{1}{360}\right)\cdot\left(\frac{19\cdot 10^6}{\text{PRI}_{\mu sec}}\right)\right\}$	60%	30
		Test B			
2	1-5	150-230	23-29	60%	30
3	6-10	200-500	16-18	60%	30
4	11-20	200-500	12-16	60%	30
Aggregate (Radar Types 1-4)				80%	120

Note 1: Short Pulse Radar Type 0 should be used for the detection bandwidth test, channel move time, and channel closing time tests.

Test A: 15 unique PRI values randomly selected from the list of 23 PRI values in Table 5a

Test B: 15 unique PRI values randomly selected within the range of 518-3066 μsec, with a minimum increment of 1 μsec, excluding PRI values selected in Test A

A minimum of 30 unique waveforms are required for each of the Short Pulse Radar Types 2 through 4. If more than 30 waveforms are used for Short Pulse Radar Types 2 through 4, then each additional waveform must also be unique and not repeated from the previous waveforms. If more than 30 waveforms are used for Short Pulse Radar Type 1, then each additional waveform is generated with Test B and must also be unique and not repeated from the previous waveforms in Tests A or B.

Test aggregate is average of the percentage of successful detections of short pulse radar types 1-4

This document is issued by the Company subject to its General Conditions of Service printed overleaf, available on request or accessible at http://www.sgs.com/en/Terms-and-Conditions.aspx and, for electronic format documents, subject to Terms and Conditions for Electronic Documents at http://www.sgs.com/en/Terms-and-Conditions/Terms-e-Document.aspx. Attention is drawn to the limitation of liability, indemnification and jurisdiction issues defined therein. Any holder of this document is advised that information contained hereon reflects the Company's findings at the time of its intervention only and within the limits of Client's instructions, if any. The Company's sole responsibility is to its Client and this document does not exonerate parties to a transaction from exercising all their rights and obligations under the transaction documents. This document cannot be reproduced except in full, without prior written approval of the Company. Any unauthorized alteration, forgery or falsification of the content or appearance of this document is unlawful and offenders may be prosecuted to the fullest extent of the law. Unless otherwise stated the results shown in this test report refer only to the sample(s) tested and such sample(s) are retained for 30 days only.

Table 5a - Pulse Repetition Intervals Values for Test A

Pulse Repetition Frequency Number	Pulse Repetition Frequency (Pulses Per Second)	Pulse Repetition Interval (Microseconds)
1	1930.5	518
2	1858.7	538
3	1792.1	558
4	1730.1	578
5	1672.2	598
6	1618.1	618
7	1567.4	638
8	1519.8	658
9	1474.9	678
10	1432.7	698
11	1392.8	718
12	1355	738
13	1319.3	758
14	1285.3	778
15	1253.1	798
16	1222.5	818
17	1193.3	838
18	1165.6	858
19	1139	878
20	1113.6	898
21	1089.3	918
22	1066.1	938
23	326.2	3066

This document is issued by the Company subject to its General Conditions of Service printed overleaf, available on request or accessible at http://www.sgs.com/en/Terms-and-Conditions.aspx and, for electronic format documents, subject to Terms and Conditions for Electronic Documents at http://www.sgs.com/en/Terms-and-Conditions/Terms-e-Document.aspx. Attention is drawn to the limitation of liability, indemnification and jurisdiction issues defined therein. Any holder of this document is advised that information contained hereon reflects the Company's findings at the time of its intervention only and within the limits of Client's instructions, if any. The Company's sole responsibility is to its Client and this document does not exonerate parties to a transaction from exercising all their rights and obligations under the transaction documents. This document cannot be reproduced except in full, without prior written approval of the Company. Any unauthorized alteration, forgery or falsification of the content or appearance of this document is unlawful and offenders may be prosecuted to the fullest extent of the law. Unless otherwise stated the results shown in this test report refer only to the sample(s) tested and such sample(s) are retained for 30 days only.

6.5.2 Long Pulse Radar Test Waveform

Table 6 – Long Pulse Radar Test Waveform

Radar Type	Pulse Width (μsec)	Chirp Width (MHz)	PRI (μsec)	Number of Pulses per *Burst*	Number of *Bursts*	Minimum Percentage of Successful Detection	Minimum Number of Trials
5	50-100	5-20	1000-2000	1-3	8-20	80%	30

The parameters for this waveform are randomly chosen. Thirty unique waveforms are required for the Long Pulse Radar Type waveforms. If more than 30 waveforms are used for the Long Pulse Radar Type waveforms, then each additional waveform must also be unique and not repeated from the previous waveforms.

Each waveform is defined as follows:

1) The transmission period for the Long Pulse Radar test signal is 12 seconds.
2) There are a total of 8 to 20 Bursts in the 12 second period, with the number of Bursts being randomly chosen. This number is Burst Count.
3) Each Burst consists of 1 to 3 pulses, with the number of pulses being randomly chosen. Each Burst within the 12 second sequence may have a different number of pulses.
4) The pulse width is between 50 and 100 microseconds, with the pulse width being randomly chosen. Each pulse within a Burst will have the same pulse width. Pulses in different Bursts may have different pulse widths.
5) Each pulse has a linear frequency modulated chirp between 5 and 20 MHz, with the chirp width being randomly chosen. Each pulse within a transmission period will have the same chirp width. The chirp is centered on the pulse. For example, with a radar frequency of 5300 MHz and a 20 MHz chirped signal, the chirp starts at 5290 MHz and ends at 5310 MHz.
6) If more than one pulse is present in a Burst, the time between the pulses will be between 1000 and 2000 microseconds, with the time being randomly chosen. If three pulses are present in a Burst, the random time interval between the first and second pulses is chosen independently of the random time interval between the second and third pulses.
7) The 12 second transmission period is divided into even intervals. The number of intervals is equal to Burst Count. Each interval is of length (12,000,000 / Burst Count) microseconds. Each interval contains one Burst. The start time for the Burst, relative to the beginning of the interval, is between 1 and [(12,000,000 / Burst Count) – (Total Burst Length) + (One Random PRI Interval)] microseconds, with the start time being randomly chosen. The step interval for the start time is 1 microsecond. The start time for each Burst is chosen randomly.

A representative example of a Long Pulse Radar Type waveform:

1) The total test waveform length is 12 seconds.
2) Eight (8) Bursts are randomly generated for the Burst Count.
3) Burst 1 has 2 randomly generated pulses.
4) The pulse width (for both pulses) is randomly selected to be 75 microseconds.
5) The PRI is randomly selected to be at 1213 microseconds.
6) Bursts 2 through 8 are generated using steps 3 – 5.
7) Each Burst is contained in even intervals of 1,500,000 microseconds. The starting location for Pulse 1, Burst 1 is randomly generated (1 to 1,500,000 minus the total Burst 1 length + 1 random PRI interval) at the 325,001 microsecond step. Bursts 2 through 8 randomly fall in successive 1,500,000 microsecond intervals (i.e. Burst 2 falls in the 1,500,001 – 3,000,000 microsecond range).

This document is issued by the Company subject to its General Conditions of Service printed overleaf, available on request or accessible at http://www.sgs.com/en/Terms-and-Conditions.aspx and, for electronic format documents, subject to Terms and Conditions for Electronic Documents at http://www.sgs.com/en/Terms-and-Conditions/Terms-e-Document.aspx. Attention is drawn to the limitation of liability, indemnification and jurisdiction issues defined therein. Any holder of this document is advised that information contained hereon reflects the Company's findings at the time of its intervention only and within the limits of Client's instructions, if any. The Company's sole responsibility is to its Client and this document does not exonerate parties to a transaction from exercising all their rights and obligations under the transaction documents. This document cannot be reproduced except in full, without prior written approval of the Company. Any unauthorized alteration, forgery or falsification of the content or appearance of this document is unlawful and offenders may be prosecuted to the fullest extent of the law. Unless otherwise stated the results shown in this test report refer only to the sample(s) tested and such sample(s) are retained for 30 days only.

6.5.3 Frequency Hopping Radar Test Waveform

Table 7 – Frequency Hopping Radar Test Waveform

Type	Pulse Width (μsec)	PRI (μsec)	Pulses per Hop	Hopping Rate (kHz)	Hopping Sequence Length (msec)	Minimum Percentage of Successful Detection	Minimum Number of Trials
6	1	333	9	0.333	300	70%	30

For the Frequency Hopping Radar Type, the same Burst parameters are used for each waveform. The hopping sequence is different for each waveform and a 100-length segment is selected from the hopping sequence defined by the following algorithm:

The first frequency in a hopping sequence is selected randomly from the group of 475 integer frequencies from 5250 – 5724 MHz. Next, the frequency that was just chosen is removed from the group and a frequency is randomly selected from the remaining 474 frequencies in the group. This process continues until all 475 frequencies are chosen for the set. For selection of a random frequency, the frequencies remaining within the group are always treated as equally likely.

This document is issued by the Company subject to its General Conditions of Service printed overleaf, available on request or accessible at http://www.sgs.com/en/Terms-and-Conditions.aspx and, for electronic format documents, subject to Terms and Conditions for Electronic Documents at http://www.sgs.com/en/Terms-and-Conditions/Terms-e-Document.aspx. Attention is drawn to the limitation of liability, indemnification and jurisdiction issues defined therein. Any holder of this document is advised that information contained hereon reflects the Company's findings at the time of its intervention only and within the limits of Client's instructions, if any. The Company's sole responsibility is to its Client and this document does not exonerate parties to a transaction from exercising all their rights and obligations under the transaction documents. This document cannot be reproduced except in full, without prior written approval of the Company. Any unauthorized alteration, forgery or falsification of the content or appearance of this document is unlawful and offenders may be prosecuted to the fullest extent of the law. Unless otherwise stated the results shown in this test report refer only to the sample(s) tested and such sample(s) are retained for 30 days only.

6.6 Calibration of Radar Waveform

6.6.1 Radar Waveform Calibration Procedure

1) A 50 ohm load is connected in place of the spectrum analyzer, and the spectrum analyzer is connected to place of the master
2) The interference Radar Detection Threshold Level is -62dBm + (2.52)[dBi]+1db= -58.48dBm that had been taken into account the output power range and antenna gain.
3) The following equipment setup was used to calibrate the conducted radar waveform. A vector signal generator was utilized to establish the test signal level for radar type 0. During this process there were no transmissions by either the master or client device. The spectrum analyzer was switched to the zero spans (time domain) at the frequency of the radar waveform generator. Peak detection was used. The spectrum analyzer resolution bandwidth (RBW) and video bandwidth (VBW) were set to 3 MHz.
4) The vector signal generator amplitude was set so that the power level measured at the spectrum analyzer was -62dBm + (2.52)[dBi] +1db= -58.48dBm. Capture the spectrum analyzer plots on short pulse radar waveform

6.6.2 Conducted Calibration Setup

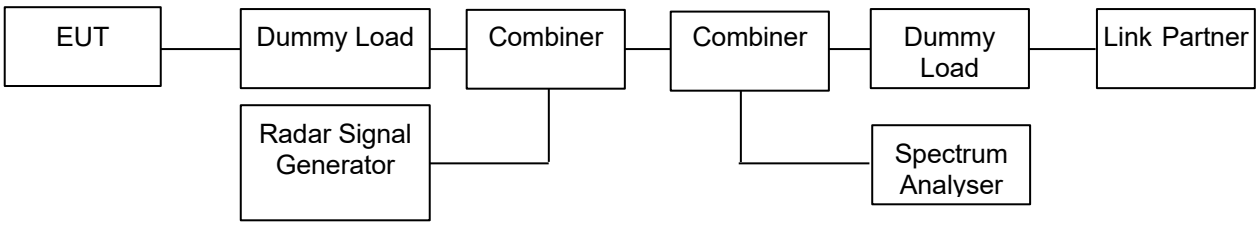

This document is issued by the Company subject to its General Conditions of Service printed overleaf, available on request or accessible at http://www.sgs.com/en/Terms-and-Conditions.aspx and, for electronic format documents, subject to Terms and Conditions for Electronic Documents at http://www.sgs.com/en/Terms-and-Conditions/Terms-e-Document.aspx. Attention is drawn to the limitation of liability, indemnification and jurisdiction issues defined therein. Any holder of this document is advised that information contained hereon reflects the Company's findings at the time of its intervention only and within the limits of Client's instructions, if any. The Company's sole responsibility is to its Client and this document does not exonerate parties to a transaction from exercising all their rights and obligations under the transaction documents. This document cannot be reproduced except in full, without prior written approval of the Company. Any unauthorized alteration, forgery or falsification of the content or appearance of this document is unlawful and offenders may be prosecuted to the fullest extent of the law. Unless otherwise stated the results shown in this test report refer only to the sample(s) tested and such sample(s) are retained for 30 days only.

6.6.3 Radar Waveform Calibration Result

Radar Type: 0	Channel: 5530
Level：-58.52 dBm	

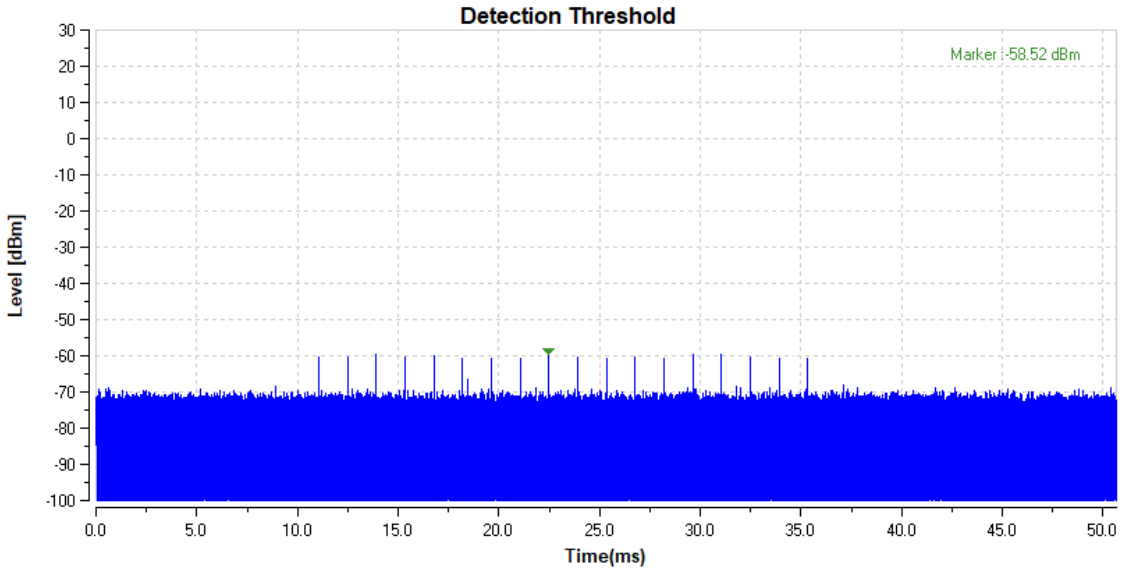

This document is issued by the Company subject to its General Conditions of Service printed overleaf, available on request or accessible at http://www.sgs.com/en/Terms-and-Conditions.aspx and, for electronic format documents, subject to Terms and Conditions for Electronic Documents at http://www.sgs.com/en/Terms-and-Conditions/Terms-e-Document.aspx. Attention is drawn to the limitation of liability, indemnification and jurisdiction issues defined therein. Any holder of this document is advised that information contained hereon reflects the Company's findings at the time of its intervention only and within the limits of Client's instructions, if any. The Company's sole responsibility is to its Client and this document does not exonerate parties to a transaction from exercising all their rights and obligations under the transaction documents. This document cannot be reproduced except in full, without prior written approval of the Company. Any unauthorized alteration, forgery or falsification of the content or appearance of this document is unlawful and offenders may be prosecuted to the fullest extent of the law. Unless otherwise stated the results shown in this test report refer only to the sample(s) tested and such sample(s) are retained for 30 days only.

6.7 Channel Move Time and Channel Closing Transmission Time

6.7.1 Test Procedure

1) The radar pulse generator is setup to provide a pulse at frequency that the master and client are operating. A type 0 radar pulse with a 1us pulse width and a 1428us PRI is used for the testing.
2) The vector signal generator is adjusted to provide the radar burst (18 pulses) at the level of approximately -61dBm at the antenna port of the master device.
3) A trigger is provided from the pulse generator to the DFS monitoring system in order to capture the traffic and the occurrence of the radar pulse.
4) EUT will associate with the master at channel. The file “iperf.exe” specified by the FCC is streamed from the PC 2 through the master and the client device to the PC 1 and played in full motion video using Media Player Classic Ver. 6.4.8.6 in order to properly load the network for the entire period of the test.
5) When radar burst with a level equal to the DFS Detection Threshold +1dB is generated on the operating channel of the U-NII device. At time T0 the radar waveform generator sends a burst of pulse of the radar waveform at Detection Threshold +1dB.
6) Observe the transmissions of the EUT at the end of the radar Burst on the Operating Channel. Measure and record the transmissions from the UUT during the observation time (Channel Move Time). One 15 seconds plot is reported for the Short Pulse Radar Type 0. The plot for the Short Pulse Radar Types start at the end of the radar burst. The Channel Move Time will be calculated based on the zoom in 600ms plot of the Short Pulse Radar Type.
7) Measurement of the aggregate duration of the Channel Closed Transmission Time method. With the spectrum analyzer set to zero span tuned to the center frequency of the EUT operating channel at the radar simulated frequency, peak detection, and max hold, the dwell time per bin is given by: Dwell (0.3ms) =S (12000ms) / B (4000); where Dwell is the dwell time per spectrum analyzer sampling bin, S is sweep time and B is the number of spectrum analyzer sampling bins. An upper bound of the aggregate duration of the intermittent control signals of Channel Closing Transmission Time is calculated by: C (ms)= N X Dwell (0.3ms); where C is the Closing Time, N is the number of spectrum analyzer sampling bins (intermittent control signals) showing a U-NII transmission and Dwell is the dwell time per bin.
8) Measurement the EUT for more than 30 minutes following the channel move time to verify that no transmission or beacons occur on this channel.

This document is issued by the Company subject to its General Conditions of Service printed overleaf, available on request or accessible at http://www.sgs.com/en/Terms-and-Conditions.aspx and, for electronic format documents, subject to Terms and Conditions for Electronic Documents at http://www.sgs.com/en/Terms-and-Conditions/Terms-e-Document.aspx. Attention is drawn to the limitation of liability, indemnification and jurisdiction issues defined therein. Any holder of this document is advised that information contained hereon reflects the Company's findings at the time of its intervention only and within the limits of Client's instructions, if any. The Company's sole responsibility is to its Client and this document does not exonerate parties to a transaction from exercising all their rights and obligations under the transaction documents. This document cannot be reproduced except in full, without prior written approval of the Company. Any unauthorized alteration, forgery or falsification of the content or appearance of this document is unlawful and offenders may be prosecuted to the fullest extent of the law. Unless otherwise stated the results shown in this test report refer only to the sample(s) tested and such sample(s) are retained for 30 days only.

6.7.2 Test Setup

Setup for Client with injection at the Master

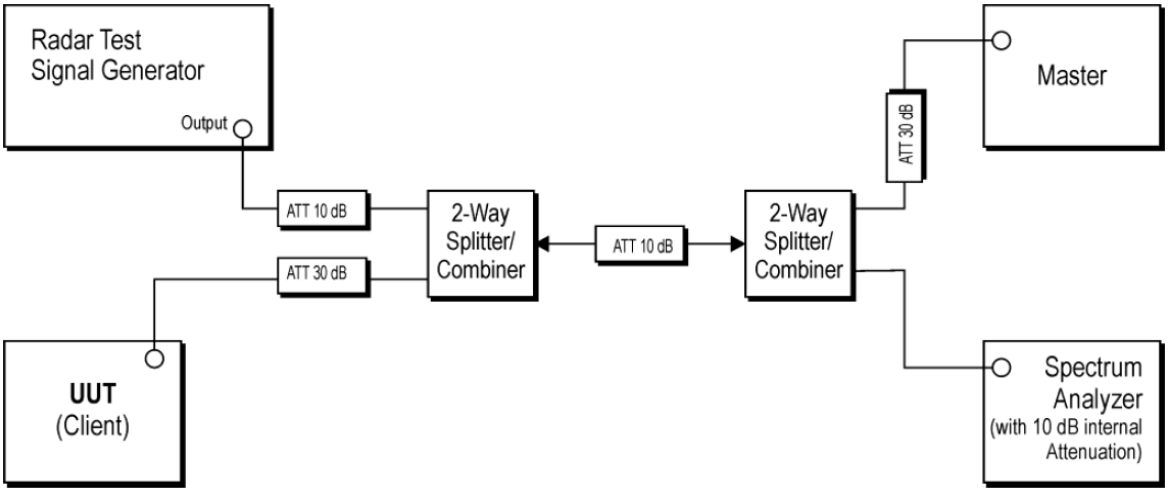

6.7.3 Channel Loading

System testing will be performed with channel-loading using means appropriate to the data types that are used by the unlicensed device. The following requirements apply:

☐	a) The data file must be of a type that is typical for the device (i.e., MPEG-2, MPEG-4, WAV, MP3, MP4, AVI, etc.) and must generally be transmitting in a streaming mode.
☐	b) Software to ping the client is permitted to simulate data transfer but must have random ping intervals.
☒	c) Timing plots are required with calculations demonstrating a minimum channel loading of approximately 17% or greater. For example, channel loading can be estimated by setting the spectrum analyzer for zero span and approximate the Time On/ (Time On + Off Time). This can be done with any appropriate channel BW and modulation type.
☐	d) Unicast or Multicast protocols are preferable but other protocols may be used. The appropriate protocol used must be described in the test procedures.

This document is issued by the Company subject to its General Conditions of Service printed overleaf, available on request or accessible at http://www.sgs.com/en/Terms-and-Conditions.aspx and, for electronic format documents, subject to Terms and Conditions for Electronic Documents at http://www.sgs.com/en/Terms-and-Conditions/Terms-e-Document.aspx. Attention is drawn to the limitation of liability, indemnification and jurisdiction issues defined therein. Any holder of this document is advised that information contained hereon reflects the Company's findings at the time of its intervention only and within the limits of Client's instructions, if any. The Company's sole responsibility is to its Client and this document does not exonerate parties to a transaction from exercising all their rights and obligations under the transaction documents. This document cannot be reproduced except in full, without prior written approval of the Company. Any unauthorized alteration, forgery or falsification of the content or appearance of this document is unlawful and offenders may be prosecuted to the fullest extent of the law. Unless otherwise stated the results shown in this test report refer only to the sample(s) tested and such sample(s) are retained for 30 days only.

6.7.4 Test Result

Test Case: Channel Loading	
11AC80	
Channel: 5530	
PASS	Value: Channel Loading:52.2%

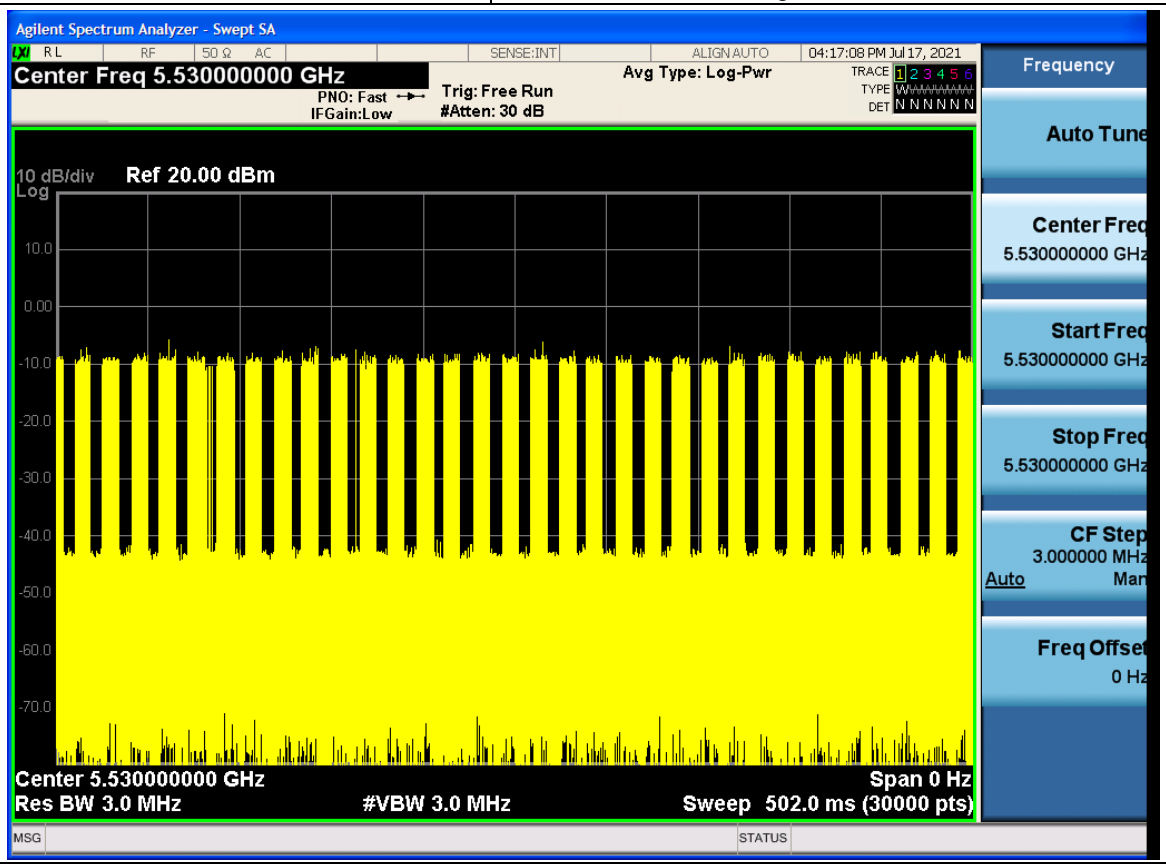

This document is issued by the Company subject to its General Conditions of Service printed overleaf, available on request or accessible at http://www.sgs.com/en/Terms-and-Conditions.aspx and, for electronic format documents, subject to Terms and Conditions for Electronic Documents at http://www.sgs.com/en/Terms-and-Conditions/Terms-e-Document.aspx. Attention is drawn to the limitation of liability, indemnification and jurisdiction issues defined therein. Any holder of this document is advised that information contained hereon reflects the Company's findings at the time of its intervention only and within the limits of Client's instructions, if any. The Company's sole responsibility is to its Client and this document does not exonerate parties to a transaction from exercising all their rights and obligations under the transaction documents. This document cannot be reproduced except in full, without prior written approval of the Company. Any unauthorized alteration, forgery or falsification of the content or appearance of this document is unlawful and offenders may be prosecuted to the fullest extent of the law. Unless otherwise stated the results shown in this test report refer only to the sample(s) tested and such sample(s) are retained for 30 days only.

Test Case: Channel Shutdown	
11AC80	
	Radar Type: Type 0
PASS	Channel Move Time:0.319S Channel Close Time:0.003S

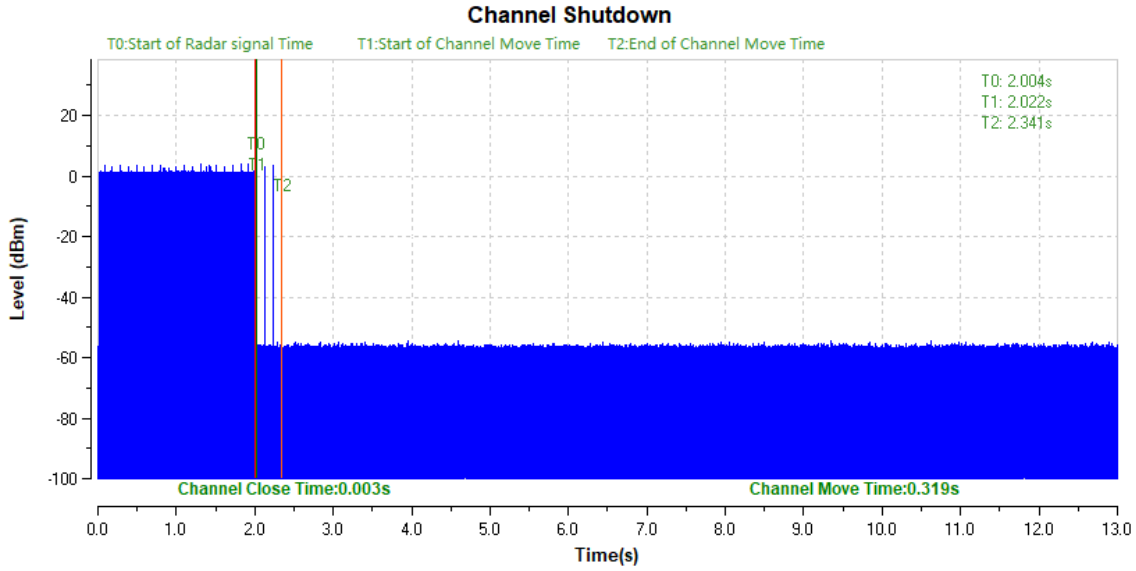

This document is issued by the Company subject to its General Conditions of Service printed overleaf, available on request or accessible at http://www.sgs.com/en/Terms-and-Conditions.aspx and, for electronic format documents, subject to Terms and Conditions for Electronic Documents at http://www.sgs.com/en/Terms-and-Conditions/Terms-e-Document.aspx. Attention is drawn to the limitation of liability, indemnification and jurisdiction issues defined therein. Any holder of this document is advised that information contained hereon reflects the Company's findings at the time of its intervention only and within the limits of Client's instructions, if any. The Company's sole responsibility is to its Client and this document does not exonerate parties to a transaction from exercising all their rights and obligations under the transaction documents. This document cannot be reproduced except in full, without prior written approval of the Company. Any unauthorized alteration, forgery or falsification of the content or appearance of this document is unlawful and offenders may be prosecuted to the fullest extent of the law. Unless otherwise stated the results shown in this test report refer only to the sample(s) tested and such sample(s) are retained for 30 days only.

6.8 DFS: Non-occupancy period

Test Requirement	KDB 905462 D02 Section 5.1
Test Method:	KDB 905462 D02 Section 7.8.3
Limit:	Minimum 30 minutes

6.8.1 Test Procedure

1) The radar pulse generator is setup to provide a pulse at frequency that the master and client are operating. A type 0 radar pulse with a 1us pulse width and a 1428us PRI is used for the testing.

2) The vector signal generator is adjusted to provide the radar burst (18 pulses) at the level of approximately -61dBm at the antenna port of the master device.

3) A trigger is provided from the pulse generator to the DFS monitoring system in order to capture the traffic and the occurrence of the radar pulse.

4) EUT will associate with the master at channel. The file “iperf.exe” specified by the FCC is streamed from the PC 2 through the master and the client device to the PC 1 and played in full motion video using Media Player Classic Ver. 6.4.8.6 in order to properly load the network for the entire period of the test.

5) When radar burst with a level equal to the DFS Detection Threshold +1dB is generated on the operating channel of the U-NII device. At time T0 the radar waveform generator sends a burst of pulse of the radar waveform at Detection Threshold +1dB.

6) Observe the transmissions of the EUT at the end of the radar Burst on the Operating Channel. Measure and record the transmissions from the UUT during the observation time (Channel Move Time). One 15 seconds plot is reported for the Short Pulse Radar Type 0. The plot for the Short Pulse Radar Types start at the end of the radar burst. The Channel Move Time will be calculated based on the zoom in 600ms plot of the Short Pulse Radar Type.

7) Measurement of the aggregate duration of the Channel Closed Transmission Time method. With the spectrum analyzer set to zero span tuned to the center frequency of the EUT operating channel at the radar simulated frequency, peak detection, and max hold, the dwell time per bin is given by: Dwell (0.3ms) =S (12000ms) / B (4000); where Dwell is the dwell time per spectrum analyzer sampling bin, S is sweep time and B is the number of spectrum analyzer sampling bins. An upper bound of the aggregate duration of the intermittent control signals of Channel Closing Transmission Time is calculated by: C (ms)= N X Dwell (0.3ms); where C is the Closing Time, N is the number of spectrum analyzer sampling bins (intermittent control signals) showing a U-NII transmission and Dwell is the dwell time per bin.

8) Measurement the EUT for more than 30 minutes following the channel move time to verify that no transmission or beacons occur on this channel.

This document is issued by the Company subject to its General Conditions of Service printed overleaf, available on request or accessible at http://www.sgs.com/en/Terms-and-Conditions.aspx and, for electronic format documents, subject to Terms and Conditions for Electronic Documents at http://www.sgs.com/en/Terms-and-Conditions/Terms-e-Document.aspx. Attention is drawn to the limitation of liability, indemnification and jurisdiction issues defined therein. Any holder of this document is advised that information contained hereon reflects the Company's findings at the time of its intervention only and within the limits of Client's instructions, if any. The Company's sole responsibility is to its Client and this document does not exonerate parties to a transaction from exercising all their rights and obligations under the transaction documents. This document cannot be reproduced except in full, without prior written approval of the Company. Any unauthorized alteration, forgery or falsification of the content or appearance of this document is unlawful and offenders may be prosecuted to the fullest extent of the law. Unless otherwise stated the results shown in this test report refer only to the sample(s) tested and such sample(s) are retained for 30 days only.

6.8.2 Test Setup

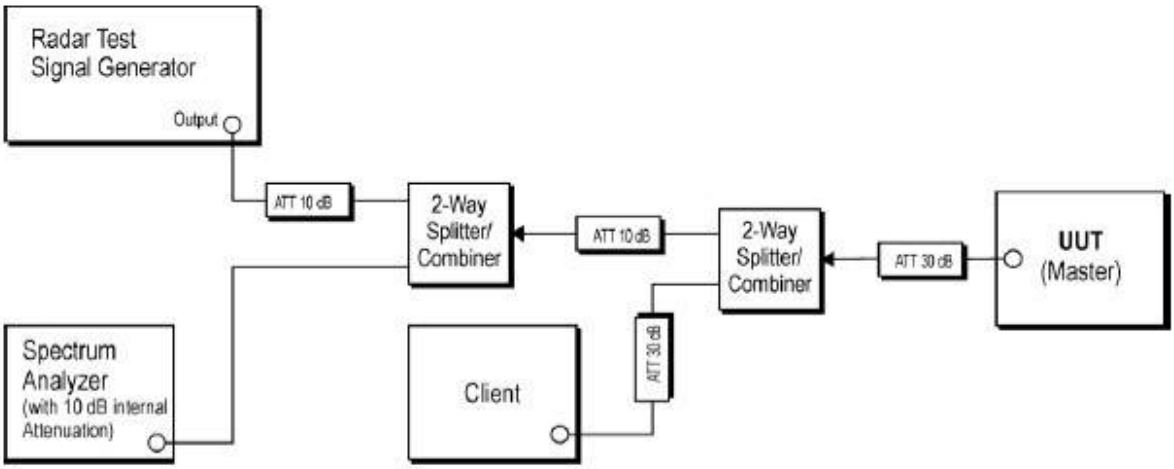

DFS master

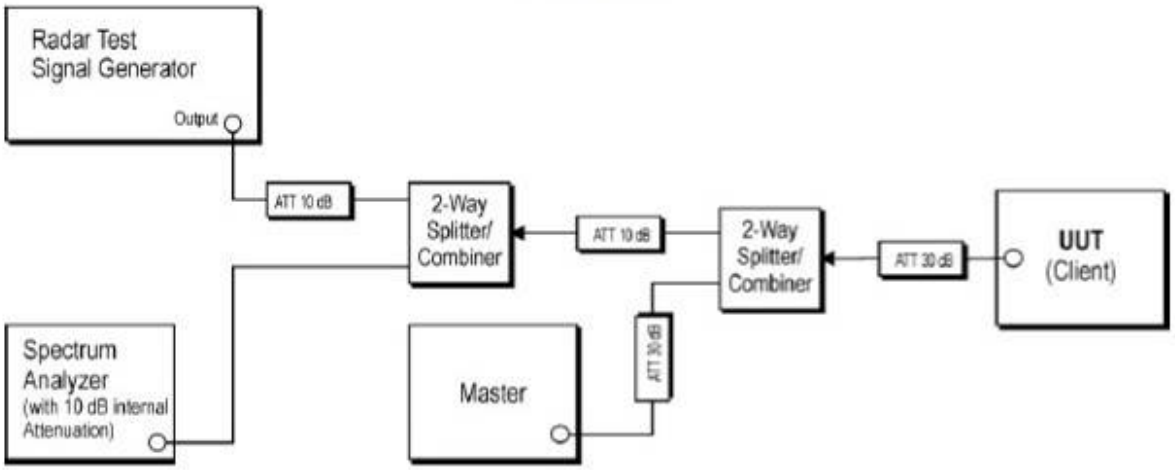

DFS slave with radar detection

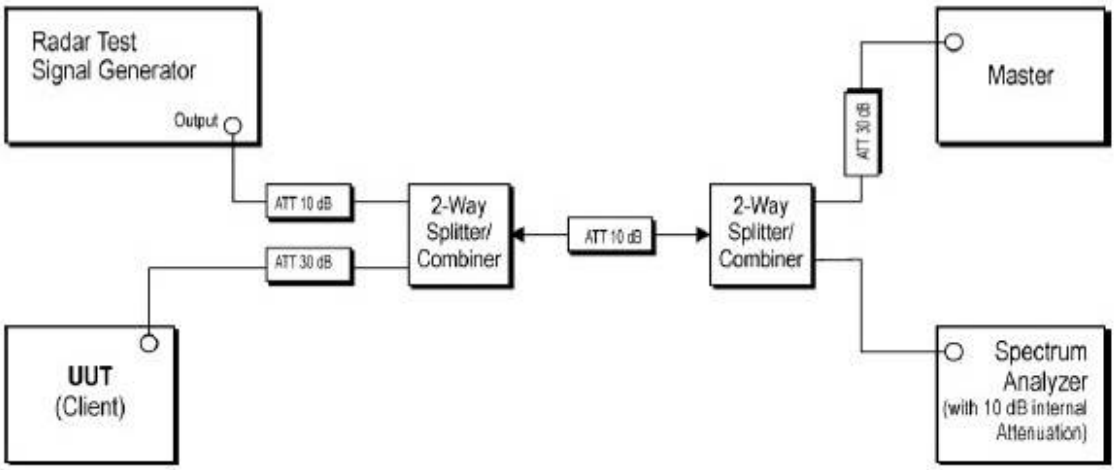

DFS slave without radar detection

This document is issued by the Company subject to its General Conditions of Service printed overleaf, available on request or accessible at http://www.sgs.com/en/Terms-and-Conditions.aspx and, for electronic format documents, subject to Terms and Conditions for Electronic Documents at http://www.sgs.com/en/Terms-and-Conditions/Terms-e-Document.aspx. Attention is drawn to the limitation of liability, indemnification and jurisdiction issues defined therein. Any holder of this document is advised that information contained hereon reflects the Company's findings at the time of its intervention only and within the limits of Client's instructions, if any. The Company's sole responsibility is to its Client and this document does not exonerate parties to a transaction from exercising all their rights and obligations under the transaction documents. This document cannot be reproduced except in full, without prior written approval of the Company. Any unauthorized alteration, forgery or falsification of the content or appearance of this document is unlawful and offenders may be prosecuted to the fullest extent of the law. Unless otherwise stated the results shown in this test report refer only to the sample(s) tested and such sample(s) are retained for 30 days only.

6.8.3 Test Result

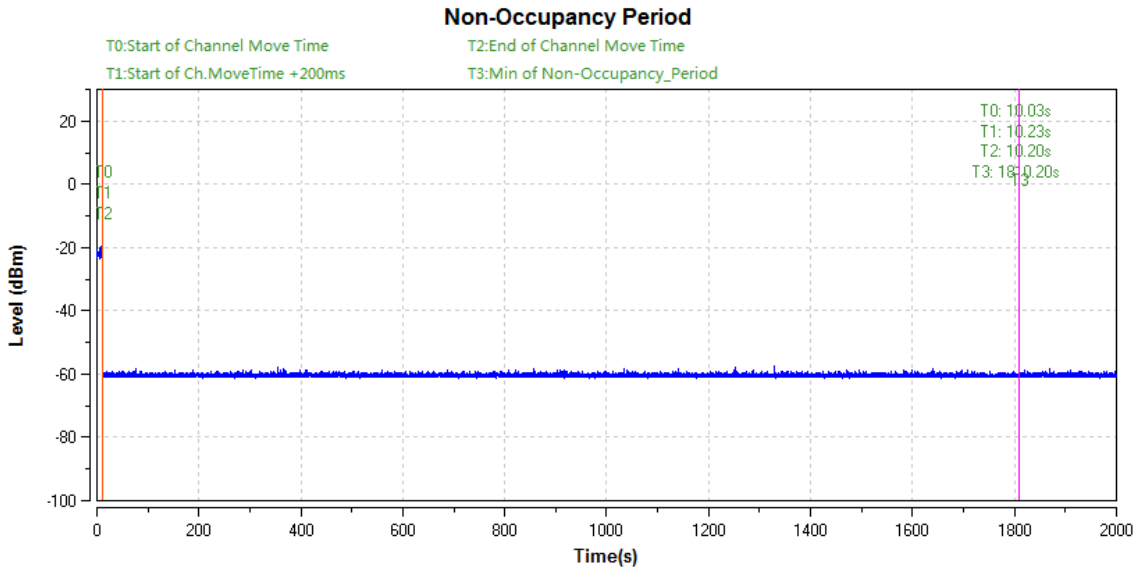

Non-occupancy period: > 30minutes (PASS)

- End of the Report -

This document is issued by the Company subject to its General Conditions of Service printed overleaf, available on request or accessible at http://www.sgs.com/en/Terms-and-Conditions.aspx and, for electronic format documents, subject to Terms and Conditions for Electronic Documents at http://www.sgs.com/en/Terms-and-Conditions/Terms-e-Document.aspx. Attention is drawn to the limitation of liability, indemnification and jurisdiction issues defined therein. Any holder of this document is advised that information contained hereon reflects the Company's findings at the time of its intervention only and within the limits of Client's instructions, if any. The Company's sole responsibility is to its Client and this document does not exonerate parties to a transaction from exercising all their rights and obligations under the transaction documents. This document cannot be reproduced except in full, without prior written approval of the Company. Any unauthorized alteration, forgery or falsification of the content or appearance of this document is unlawful and offenders may be prosecuted to the fullest extent of the law. Unless otherwise stated the results shown in this test report refer only to the sample(s) tested and such sample(s) are retained for 30 days only.