xbike
Instruction Manual

BRAND PHILOSOPHY

Honesty

With every pedal stroke, we score combos on the beat. The gaming system allows us to connect and compete with our friends and family, and nurtures deep bondings within the Freebeat community. Our minds clear and we connect with our true and best selves. We truly believe in the power of sharing and hence we offer all of the Freebeat products at honest pricing to make positive energy accessible for everyone. Throughout the synchronized experience, we laugh, we sweat, we grow — and we ride with the best, as a community.

Sophistication

Live with sophistication.

Every drop of sweat counts. Freebeat's sensors would never miss a single pedaling of yours. Whenever you feel the vibe and give another push on the bike, our system would record your performance and recommend the best workout program according to your preference. Freebeat knows what you like, and each smart class recommendation would be your favorite.

Excitement

Live with excitement.

Freebeat creates an alternative to any dull fitness routine that burdens us. We built a fun interactive game to bring studio cycling and strength training experience home. Our tech crew designs distinct computer-generated special effects for each class according to the rhythm so that every single class is unique and flows perfectly the vibe. With the beat- matching gamification, it feels like dancing with a brainy bike rather than just working out on a stationary bike.

TABLE OF CONTENTS

Safety Information 05

Notices 06

Specifications 08

Assembly Instructions 11

APP Connection 22

Maintenance & Care 24

Warranty Information 28

SAFETY INFORMATION

⚠ **Before assembling or using this bike, please read the following instructions carefully. This contains important information for use andmaintenance of the equipment as well as for your personal safety.Keep these instructions in a safe place for maintenance purposes or forordering spare parts.**

Before beginning your program of exercise, consult your doctor to

ensure that you are fit enough to usethis equipment. Base your program of exercise on the advice given by your doctor. Incorrect or excessive exercise may damage your health.

The equipment should be used only for its intended purpose, i.e. forphysical exercise by adult persons. Any other use of the equipment is prohibited and may be dangerous.

The manufacturer cannot be held liable for damage or injury caused byimproper use of the equipment.

Incorrect repairs and structural modifications (e.g. removal or replacement of original parts) mayendanger the safety of the user.

Damaged components may endanger your safety or reduce the lifetime of the equipment. For this reason, wrong or damaged parts should be replaced immediately andthe equipment taken out of use untilthis has been done. Use only originalspare parts.

If the equipment is in regular use, check all its components thoroughlyevery 1 – 2 months. Pay particular attention to the tightness of bolts and nuts. This is particularly true forall attached parts. To ensure that the safety level is kept to the highestpossible standard, determined by itsconstruction, this product should beserviced regularly (once a year) by special retailers.

Before using this equipment, pleasecheck the flywheel in case of any sudden injured.

Instruct persons using the equipment (in particular children) on possible sources of danger duringexercise.

Any interference with parts of the product that are not described withinthe manual may cause damage or endanger the person who is using this machine. Extensive repair must only be carried out by special retailersor qualified personnel trained by manufacturer.

If any problem, please consult thelocal retailer.

NOTICES

Before using the equipment for exercise, check carefully to ensure that it has been correctly assembled.

- Before using the equipment for exercise, please read the manual book carefully and familiarize all the functions of the equipment.

- This machine is designed for using by adults and children should not be allowed to play with it. Children at play behave may occur unpredictably and dangerous situations for which the manufacturer cannot be held liable.

- The maximum user weight is 100 kg. It doesn't allow two or more person exercise on the treadmill at the same time.

- The flywheel is designed as bi-direction running, so it can not be turned in a second. It needs to push the brake button, and then turn away.

- A slight noise of production on the belt or motor is due to the construction and has no negative effects upon operation.

- Before use, always check all screws and plug-in connections as well as respective safety devices fit correctly.

- Do not use corrosive or abrasive materials to clean the equipment. Ensure that such materials are not allowed to pollute the environment.

- The saddle and handle are designed as step-less adjustment, so please make sure the minimum insert depth is 55mm and fasten up.

- To avoid injuries in case of emergencies, always make sure that you have enough space behind your exercise bike (min. 2000 mm x 1000 mm).

- Make certain that no other persons are in the area of your exercise bike, because they may be injured.

- Always wear suitable shoes and clothes when using the equipment. Don't wear loose clothes in case to be engulfed into the exercise bike. Barefoot; wearing high-heel shoes; wearing shoe leather are not allowed in exercising. In case your foot slips from the footplate, please insert your foot into the plate cover.

- The resistance is adjusted by the applied force between the brakesheet and flywheel. You can rotate the brake button clockwise/ anti-clockwise so as to increase/ decrease the resistance.

Professional Installation

- Packaging materials are always handled with care to avoid all possible hazards. Such as children playing with plastic bags, may cause the risk of suffocation!

- The equipment must be properly installed by an adult. If in doubt and need help from others, look for someone with technical skills.

- Please install the equipment carefully and pay attention to your safety to avoid injuries caused by careless use of tools or manual handling.

Correct Order

- Open all individual parts and place them on the floor in turn. To avoid scratch parts or your floor, place these parts on cartons or gaskets.

- For technical reasons, we reserve the right to perform the preliminary installation work.(e.g., install the plug).

- Fix all parts with screws but do not lock them first. Then check if they are properly installed and lock the screws completely with a wrench. Finally check that all the nuts are fully locked.

Packaging Disposal

- Please be sure to keep the packing for the event of repairs / warranty matters.

- At the end of the product's life cycle, it cannot be treated as ordinary household waste, but must be transported to a recycling site. Please check with your local municipal administration for a place to dispose of the product.

SPECIFICATIONS

SPECIFICATIONS

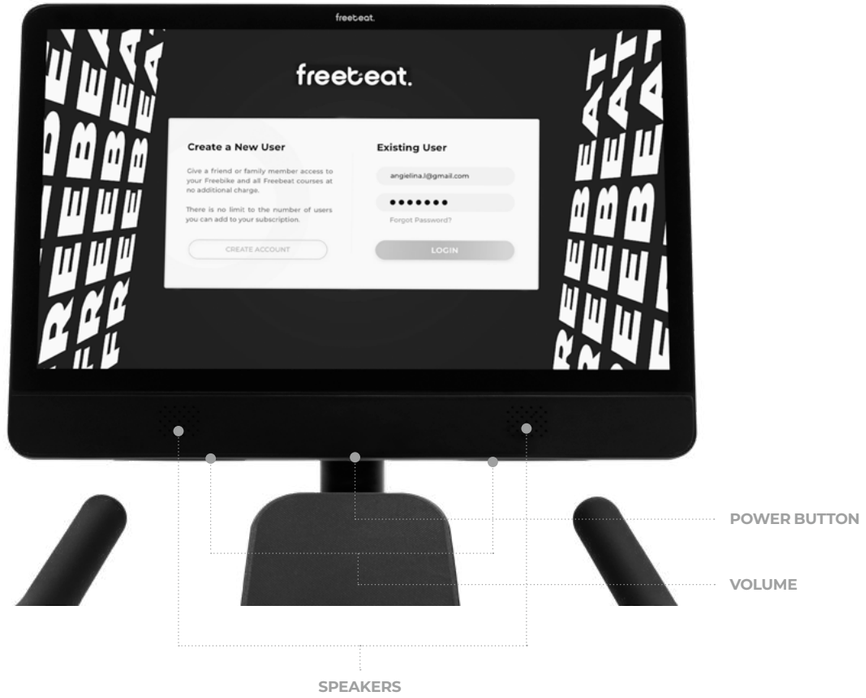

SPECIFICATIONS

MEASUREMENTS

- Dimensions: 39.37L * 11.81W * 32.48H inches
- Screen: 21.5" diagonal
- Flywheel: 18.7 lbs /8.5kg
- Weight: 89 lbs

USER REQUIREMENTS

- Height range: 5' - 6'4"
- Weight maximum: 297 lbs
- Age minimum: 14+

PERFORMANCE

- Power: Input 100 - 240V - 50/60Hz
  0.8A Max Output 12V 3.0A

CONSTRUCTION

- Frame: Welded steel
- Resistance: Magnetic with mechanical adjustment
- Drive: Power transmission belt drive

CONTROLS

- Vertical and horizontal seat adjustment Adjustable non-slip Multi-position handlebar
- Rotatable touchscreen with 180˚ of movement

SCREEN AND SOUND

- 21.5" Screen 1080p HD
- 10-Point multitouch touchscreen1.8GHz Rackchip RK3288
- 2GB RAM
- 8GB internal flash storage
  2-Channel 10 watts rear-facing stereo speaker system
- USB microport*2 (test port included) Bluetooth® 5.0 connectivity

CONNECTION

- 802.11 a/b/g/n/ac - 2.4GHz & 5GHz
- IOS11, Android5.0+

FCC Warning:
Please take attention that changes or modification not expressly approved by the party responsible for compliance could void the user's authority to operate the equipment.

This device complies with Part 15 of the FCC Rules. Operation is subject to the following two conditions:
(1) This device may not cause harmful interference, and
(2) This device must accept any interference received, including interference that may cause undesired operation.

This equipment complies with FCC radiation exposure limits set forth for an uncontrolled environment. This equipment should be installed and operated with minimum distance 20cm between the radiator & your body.

SET UP

Assembly Instructions

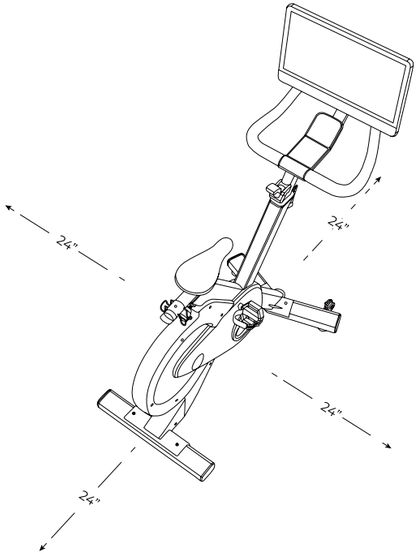

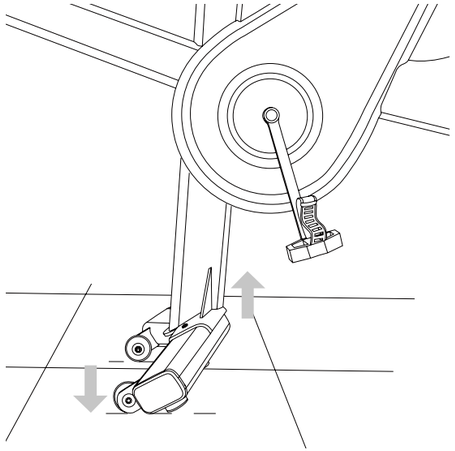

BIKE PLACEMENT

Place the bike on a solid, level, and firm surface to prevent the risk of tipping. Use a mat to help keep the bike in place and protect the floor.
Allow a clearance of 24" on all sides of the bike for safety.

MOVING THE BIKE

Moving the bike requires two people for safety.
Ensure power cables are disconnected.
Using only handlebars, tilt the bike forward onto its wheels.
While holding on to handlebars, have a second person lift the rear stabilizer.
Carefully roll the bike to the new location, avoiding uneven surfaces.
If the bike rocks after being set down, unscrew each stabilizer foot until it rests firmly and steadily on the floor.

ASSEMBLY INSTRUCTIONS

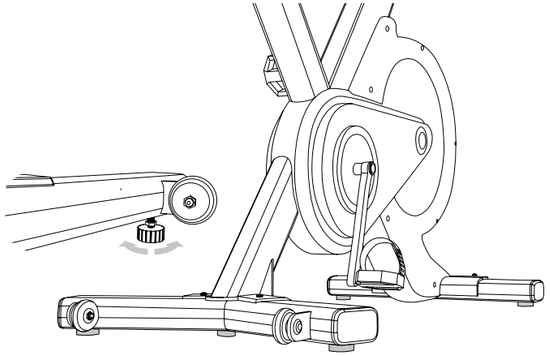

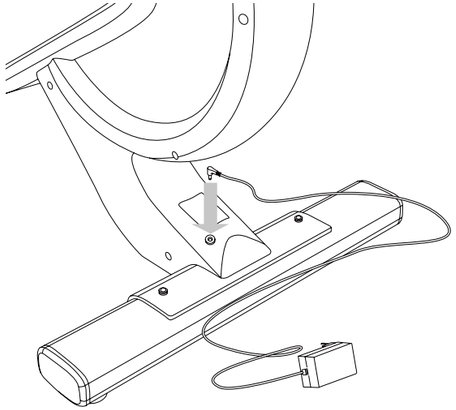

STABILIZER FEET ADJUSTMENT

The bike has adjustable stabilizer feet on each corner for a steady, wobble-free installation. To ensure the bike is level on the ground, adjust the stabilizer feet as follows:
Tighten the feet so they are screwed all the way into the stabilizer.
Set the bike in its desired location. Loosen the feet to remove all space between
the stabilizer feet and the floor. Adjust each foot on both the front and rear stabilizer. When the bike is level, lock the nut on all stabilizer feet.

CONNECTING THE POWER CABLES

Plug the power cable into the power adapter.
Plug the power adapter into the bike under the seat post, near the rear stabilizer. Secure the power cable by using either front-facing or rear-facing cable routing.

ASSEMBLY INSTRUCTIONS

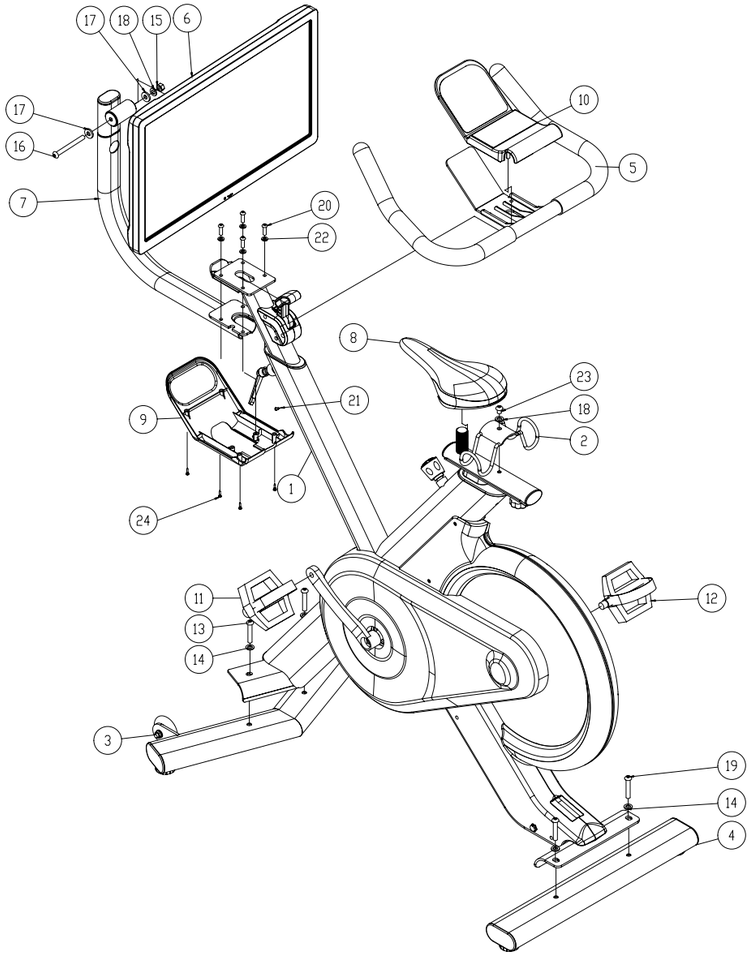

ASSEMBLY INSTRUCTIONS

① Main frame assembly

1x

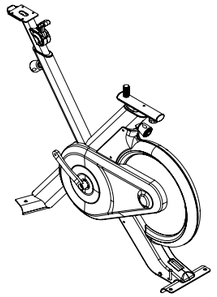

② The dumbbell stand welding

1x

④ Rear pedestal assembly

1x

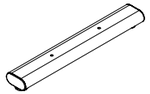

⑩ Up Handrail cover

1x

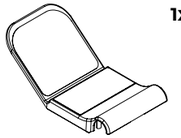

③ Front pedestal assembly

1x

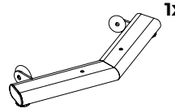

⑤ Handrail assembly

1x

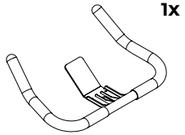

⑨ Down Handrail cover

1x

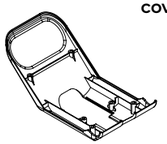

⑥ Console assembly

1x

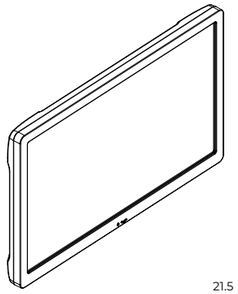

21.5

⑦ L bracket assembly

1x

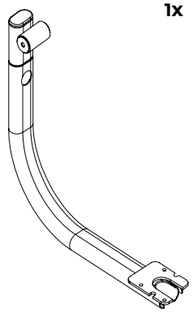

⑧ Cushion

1x

⑪ Pedal left

1x

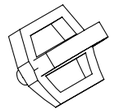

⑫ Pedal right

1x

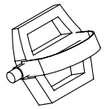

ASSEMBLY INSTRUCTIONS

⑬ **Allen screw, round head**

2x

M8X20

⑭ **Washer**

4x

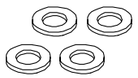

8(GB/T97.1-85)(ROHS) white zinc

⑮ **Locknut**

1x

M8

⑯ **Allen screw, round head**

1x

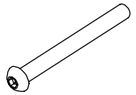

M8X80 black zinc

⑰ **Nylon cushion**

2x

T1.5*ϕ10*ϕ27

⑱ **Washer**

2x

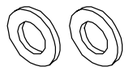

8

⑲ **Allen screw, round head**

2x

M8X45 chroming

⑳ **Philips screw, round head**

4x

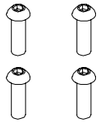

M6X20 chroming

㉑ **Philips screw, round head**

1x

ST4.2X19

㉒ **Washer**

4x

6

㉓ **Allen screw, round head**

1x

M8X10

㉔ **Philips screw, round head**

4x

ST3.5X9.5

ASSEMBLY INSTRUCTIONS

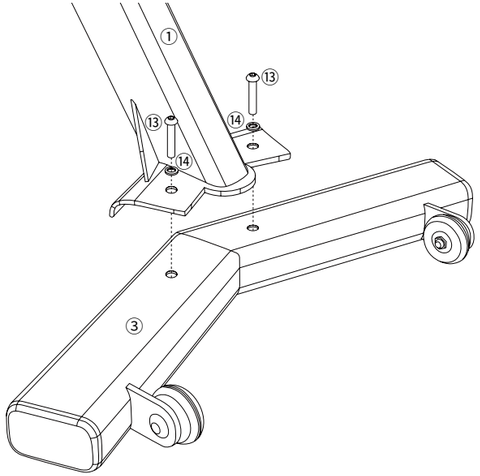

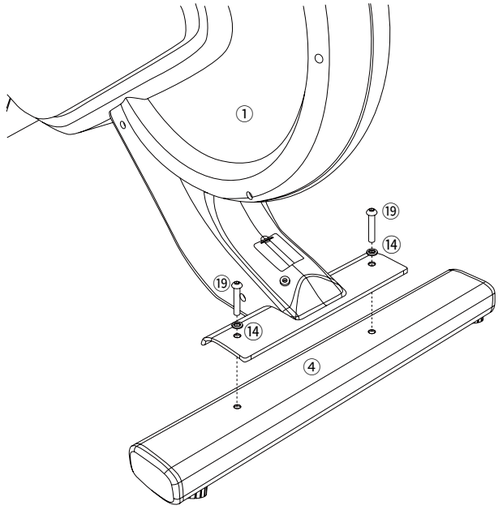

STEP 1

a. Place ③ the front bottom tube (with wheels) close to the front tile of ① mainframe, align the screw holes, and use ⑬ hexagon socket flat head screw m8*20 and ⑭ washer to fix and lock.

b. Close ④ the rear bottom tube to the back of the ① mainframe, align the screw holes, and use ⑲ hexagon socket flat head screws m8*45 and ⑭ washer to fix and lock.

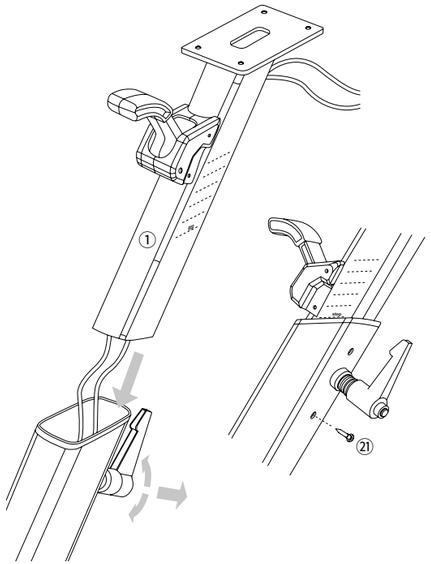

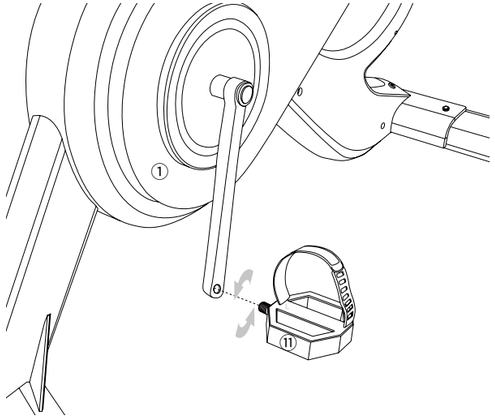

STEP 2

a. Cut off the protective tie on the riser tube, insert the riser tube into the front tube of ① mainframe, then switch to the STOP line. Place ㉑ into the ϕ9 small hole on the front tube and lock in; and adjust the riser tube to a suitable height. Then rotate and lock the L-shaped latch lock.

STEP 3

a. Install the left and right pedals ⑪ & ⑫ on the left and right cranks respectively on ① mainframe.
b. R is marked on the axle core of the pedal on the right side, and R is also marked on the crank. Please double check and lock it clockwise to install.
c. L is marked on the axle core of the left pedal, and L is also marked on the crank. Please double check and lock it clockwise to install.

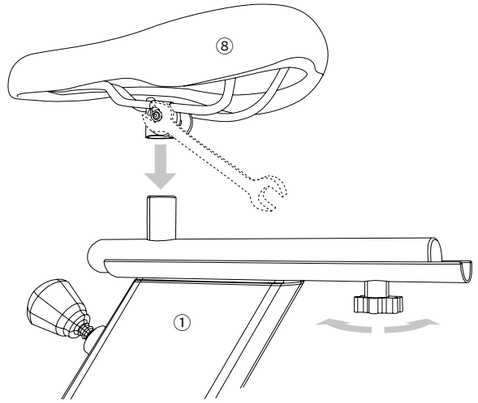

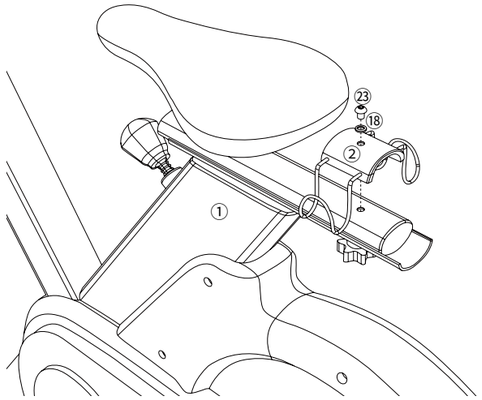

STEP 4

a. Take out ⑧ the seat cushion and install it on ① mainframe. Adjust the angle and lock in.

b. Install ② the dumbbell rack to the back of the cushion tube of ① mainframe, and lock it with ㉓ Allen screw, round head and ⑱ washers.

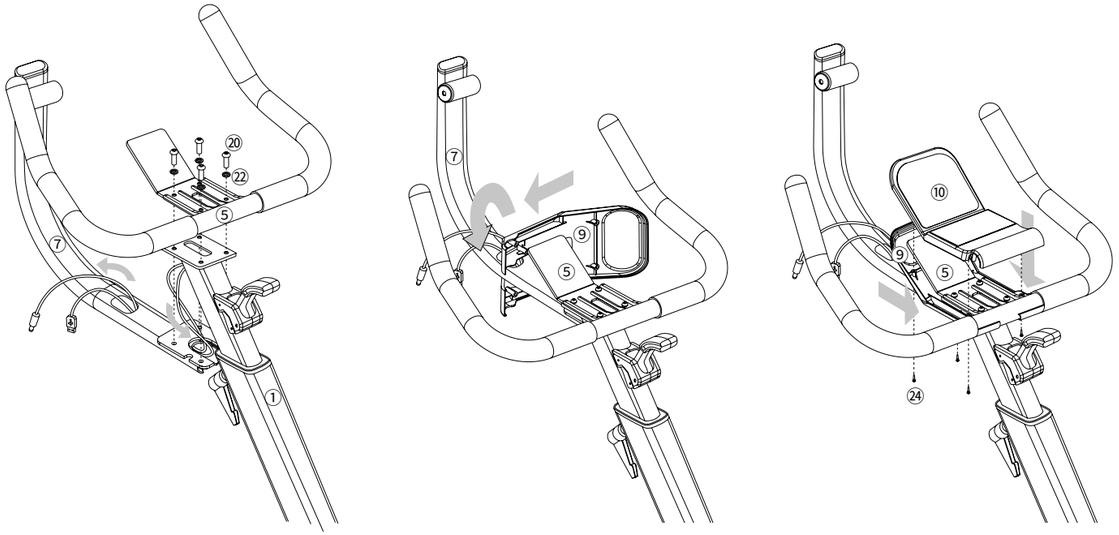

STEP 5

a. Put ⑦ L bracket close to the bottom of ①, and pass the power and data cords through the tube. Take out the cords from the hole in the middle of the ⑦ L bracket. Then put the ⑤ faucet handle close to the top of the riser. After the holes are aligned, use four ⑳ hexagon socket screws and ㉒ washers to fix and lock in.

b. Rotate the lower cover of the ⑨ mobile phone holder by 90 degrees, and have the openings align with the side of ⑦ L bracket. Rotate back to center, and push forward to ⑤ handrail and fit into ⑩ tube upper cover. Align the lower cover at the center of the faucet handle on both sides and lock with ㉔ Philips screw, round head.

ASSEMBLY INSTRUCTIONS

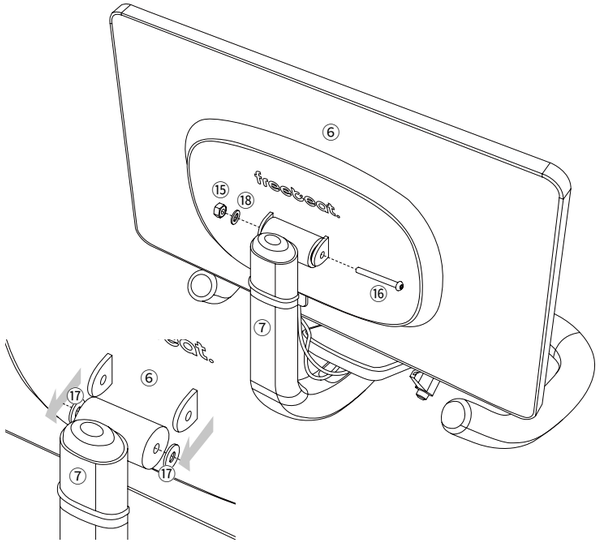

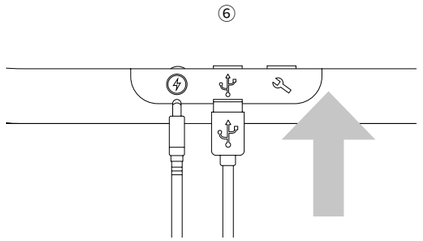

STEP 6

a. Align ⑥ on the back of ⑦ L bracket, and insert a piece of ⑰ damping pads on both sides. Use ⑱ washer, ⑮ locknut, and ⑯Allen screw to lock in.

STEP 7

a. Insert the power plug into the socket with a lightning mark. Insert the data cable plug into the socket with the usb logo.

START

App Connection

APP CONNECTION

TIME REMAINING

LEADERBOARD

COMBO

SCORE

QUALITY

LEADERBOARD

% ON BEAT

DOUBLE BEAT

CADENCE

RESISTANCE

SINGLE BEAT

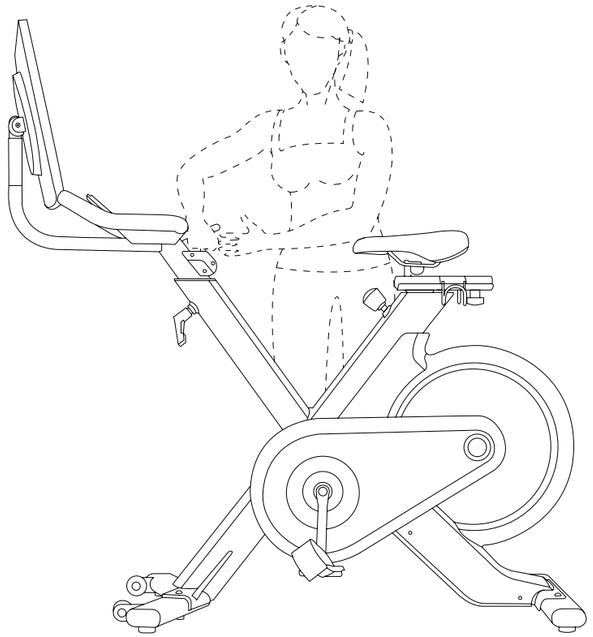

SEAT HEIGHT ADJUSTMENT

Turn the knob on the seat height adjustment pin counterclockwise to loosen.
Pull seat adjustment pinout, raise or lower seat as desired, then lock back in.
Turn the knob clockwise to securely tighten and fully lock in place.
Ensuring your handlebar depth is first set to 1, place your elbow at the front of the seat and extend your fingers toward the handlebars.
Place your fist between the tip of your extended fingers and the handlebar knob with your other hand.
Turn the knob on the seat depth adjustment pin counterclockwise to loosen.
Adjust the seat forward or backward until there is no space between the length of your elbow to fingertips plus your fist and the handlebar knob.
Turn the handlebar knob clockwise to securely tighten and lock in place.

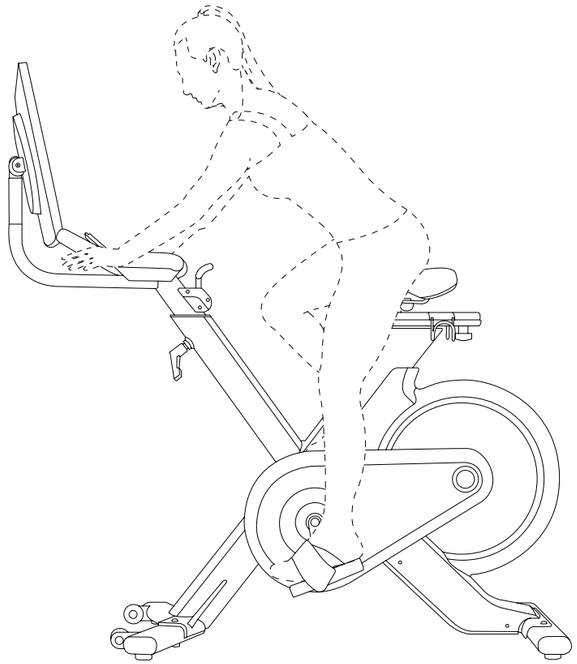

RECOMMENDED BODY POSITIONING

Your hands should rest comfortably on the handlebars without reaching.
Your arms should be slightly bent at the elbows.
Your leg should be slightly bent at the bottom of the stroke.

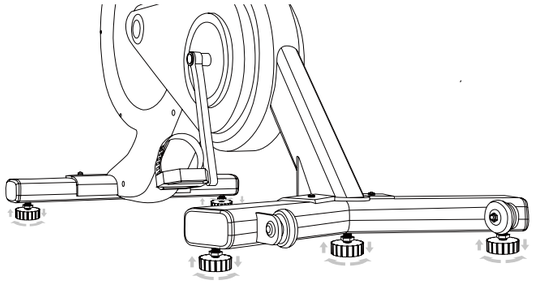

AFTER RIDES

To ensure safe operation and optimal performance, check for wear and damage and perform maintenance on a regular basis. Replace any damaged or defective parts immediately. Do not use the bike until the repair is performed. Only use original parts from the manufacturer. Changes or modifications to this unit not expressly approved by freebeat could void the warranty.

CLEANING: Wipe down the bike using a damp cloth.
LEVELING FEET: If the bike rocks back and forth, turn each leveling foot clockwise (when viewed from above) until it rests firmly on the ground.

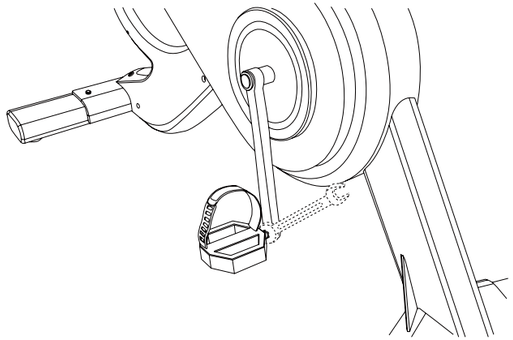

EVERY 3 TO 5 RIDES

CLEANING: Clean the bike thoroughly using a damp cloth and a mild household cleaner diluted in water. Clean the touchscreen using an electronics wipe.
PEDALS: Tighten any loose pedal with the included 15 mm wrench. Pedals should be tightened to 25 lb-ft of torque. Turn clockwise to tighten the right pedal and counterclockwise to tighten the left pedal.

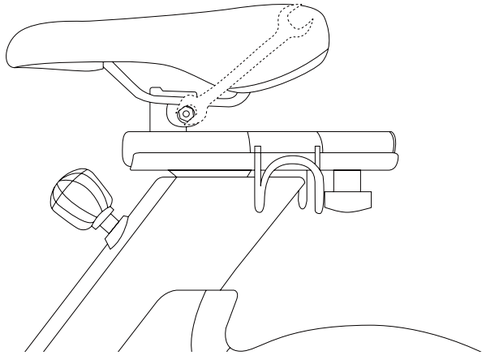

EVERY 3 TO 5 RIDES CONTINUED

CLEATS: Use a 4mm Allen wrench to tighten any loose screws attaching your cleats to your cycling shoes.
SADDLE: Make sure the saddle is parallel to the ground. Then use the included 13mm wrench to tighten the seat-fixing nuts on both sides.

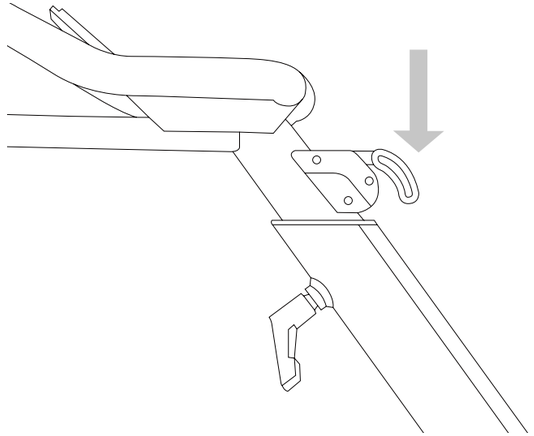

EVERY 15 TO 20 RIDES

CAUTION: Service other than the procedures described here must be performed by an authorized technician.
EMERGENCY BRAKE: Press down on the resistance knob while pedaling slowly. The flywheel should come to a complete stop immediately. If it does not, stop using the bike immediately and contact freebeat Support.
FRAME: Check the entire frame for signs of wear and damage, and tighten any loose bolts.

MAINTENANCE & CARE

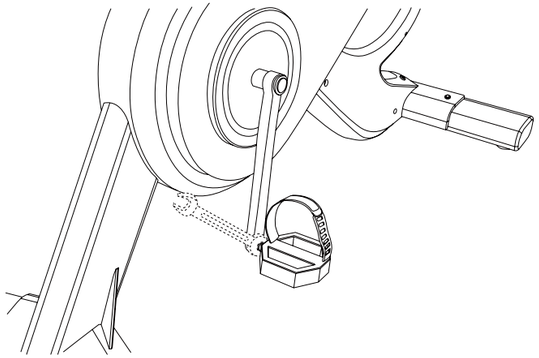

ANNUALLY

PEDALS: Replace pedals. Tighten new pedals to 25 lb-ft of torque.
For further instructions, see www.freebeatfit.com

WARRANTY INFORMATION

Stochastic Process Technology Group Limited provides a limited warranty for your in-home, indoor, non- commercial use of the xbike. A complete description of the terms and conditions of the limited warranty, including the scope of coverage, applicable warranty periods, and certain important exclusions and limitations, can be accessed at: www.freebeatfit.com/warranty.

Scan here to contact us
[24Hrs Online]

https://freebeat.afterservice.vip

Stochastic Process Technology Group Limited
customerservice@freebeatfit.com

Manufacture: WNQ (Shanghai) Body-building Equipment Co., Ltd
Add: No. 388, Beiying Road, Qingpu Area, Shanghai, China