V1.4

Auto Feed Unit

Quick Start Guide

Please refer to this guide to complete the installation and printing of the AFU.

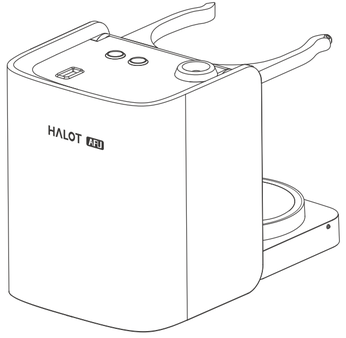

IC ID Requirement

This device contains licence-exempt transmitter(s)/receiver(s) that comply with Innovation, Science and Economic Development Canada' s licence-exempt RSS(s). Operation is subject to the following two conditions:

(1) This device may not cause interference;

(2) This device must accept any interference, including interference that may cause undesired operation of the device.

The device meets the exemption from the routine evaluation limits in section 2.5 of RSS 102 and compliance with RSS-102 RF exposure, users can obtain Canadian information on RF exposure and compliance.

This transmitter must not be co-located or operating in conjunction with any other antenna or transmitter. This equipment should be installed and operated with a minimum distance of 20 centimeters between the radiator and your body.

L'émetteur/récepteur exempt de licence contenu dans le présent appareil est conforme aux CNR d'Innovation, Sciences et Développement économique Canada applicables aux appareils radio exempts de licence. L'exploitation est autorisée aux deux conditions suivantes :

(1) L'appareil ne doit pas produire de brouillage;

(2) L'appareil doit accepter tout brouillage radioélectrique subi, même si le brouillage est susceptible d'en compromettre le fonctionnement.

Le dispositif rencontre l'exemption des limites courantes d'évaluation dans la section 2.5 de RSS 102 etla conformité à l'exposition de RSS-102 rf, utilisateurs peut obtenir l'information canadienne surl'exposition et la conformité de rf.

Cet émetteur ne doit pas être Co-placé ou ne fonctionnant en même temps qu'aucune autre antenne ouémetteur. Cet équipement devrait être installé et actionné avec une distance minimum de 20 centimètres entre le radiateur et votre corps.

FCC Requirement

Any changes or modifications not expressly approved by the party responsible for compliance could void the user' s authority to operate the equipment.
This device complies with Part 15 of the FCC Rules. Operation is subject to the following two conditions:

(1) This device may not cause harmful interference;

(2) This device must accept any interference received, including interference that may cause undesired operation.

Note: This equipment has been tested and found to comply with the limits for a Class B digital device, pursuant to Part 15 of the FCC Rules. These limits are designed to provide reasonable protection against harmful interference in a residential installation. This equipment generates, uses, and can radiate radio frequency energy, and if not installed and used in accordance with the instructions, may cause harmful interference to radio communications. However, there is no guarantee that interference will not occur in a particular installation. If this equipment does cause harmful interference to radio or television reception, which can be determined by turning the equipment off and on, the user is encouraged to try to correct the interference by one or more of the following measures:

- Reorient or relocate the receiving antenna.
- Increase the separation between the equipment and receiver.
- Connect the equipment into an outlet on a circuit different from that to which the receiver is connected.
- Consult the dealer or an experienced radio/TV technician for help

This equipment complies with FCC radiation exposure limits set forth for an uncontrolled environment. This equipment should be installed and operated with a minimum distance of 20cm between the radiator & your body. This transmitter must not be co-located or operating in conjunction with any other antenna or transmitter.

Auto Feed Unit

Enjoy!

Please visit the PioCreat website for more machine operation and maintenance tutorials.

Component Introduction

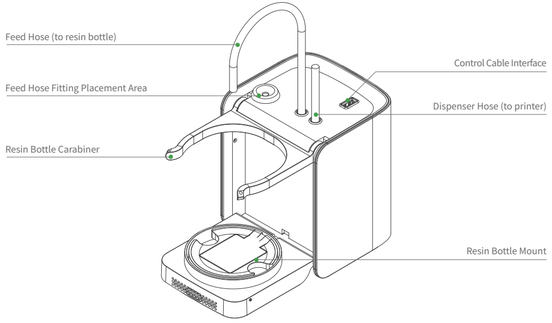

List of Accessories

Detection Module

Detection Module Holder

Adapter Caps

Suction Tube

Silicone Mat

Spare Screws

Control Cable

Quick Start Operation Schematic

1 Turn the mount down and the snap ring up.

Video Tutorial

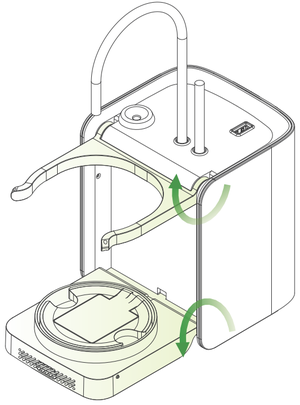

Quick Start Operation Schematic

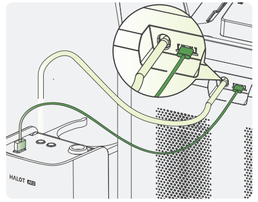

2 Connect the extrusion feed hose and Type C control cable to the AFU I/O port on the printer.

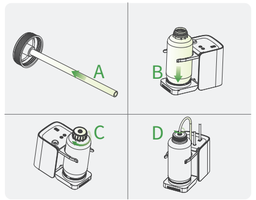

3 A. Vertically insert the suction tube into the adapter cap port
B. Place resin bottle into the mounting base
C. Tighten adapter cap with clockwise rotation
D. Press-rotate the feed hose connector into the adapter cap inlet port.

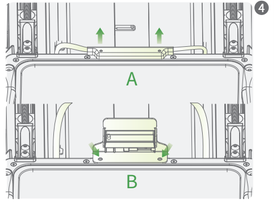

4 After removing the material tank:
A. Loosen the fastening screws of the fixed slot and disassemble the fixed slot assembly.
B. Install the detection module bracket at the original position of the fixed slot.

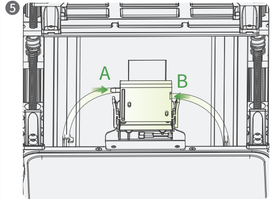

5 Install the detection module onto the bracket and press it down until the buckle makes a "click" sound.
A. Vertically insert the feeding hose into the feeding port of the detection module.
B. Vertically insert the control cable into the wiring port of the detection module.

First Use

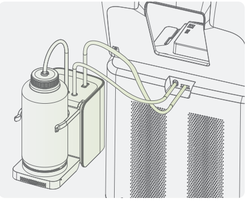

1 Inspect the installation of the feeding resin bottle;

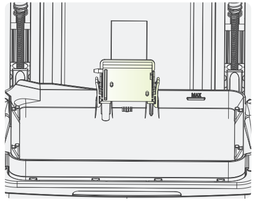

2 Remove the detection module from the bracket and install it on the fixed position of the material tank.
Press it down until the buckle makes a "click" sound.

3 Manual control of the feeding module of the device:
Main interface → Settings → Feeding module

4 Automatic control of the feeding module of the device: Main interface → Printing →
On the file information interface or the printing interface, click the "Automatic feeding" button to start automatic feeding at any time.

Note: If the printer page can access the "Feeding Module", it means that the AFU has been accessed, If it cannot access the"Feeding Module", then check the wiring connection; if the resin bottle has an RFID chip, the page display will show the " " logo, which can display the resin balance;