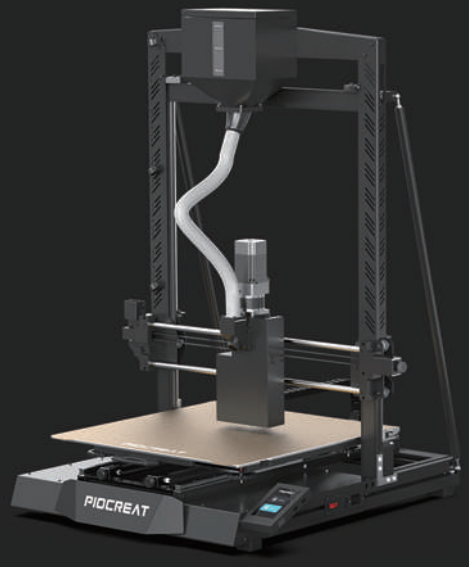

PIOCREAT

G5Ultra

FGF 熔粒构造

3D Printer User Manual

3D打印机使用说明书

V1.0

Dear Consumers,

Thank you for choosing our products.For the best experience, please read the instructions before operating the Printer.
Our teams will always be ready to render you the best services. Please contact us via the phone number or e-mail address provided at the end when you encounter any problem with the Printer.
For a better experience in using our product, you can also learn how to use the printer in the following ways:
View the accompanied instructions and videos in the U disk.

尊敬的用户：

感谢您选择创想三帝的产品。为了您使用方便，请您在使用之前仔细阅读本说明书，并严格按照说明书的指示进行操作。
创想三帝团队时刻准备为您提供优质的服务。在使用过程中无论遇到什么问题，请按照说明书结尾所提供的电话、邮箱与我们进行联系。为了您能够更好地体验我们的产品，您还可以从以下方式获取设备操作知识：
随机使用说明：您可以在U盘内找到相关使用说明及视频。

NOTES 使用须知

1. Do not use the printer any way other than described herein in order to avoid personal injury or property damage.
2. Do not place the printer near any heat source or flammable or explosive objects. We suggest placing it in a well-ventilated, low-dust environment.
3. Do not expose the printer to violent vibration or any unstable environment, as this may cause poor print quality.
4. Please use recommended resin to in case damage of machine.
5. Do not use any other power cable except the one supplied. Always use a grounded three-prong power outlet.
6. Please do not open the plastic cover during usage, otherwise the printing will be interrupted.
7. Do not wear cotton gloves when operating the printer. Such cloths may become tangled in the printers moving parts leading to burns, possible bodily injury, or printer damage.
8. Please wait a moment after the print is finished. And please wear gloves to take out the print by tools.
9. Clean the printer frequently. Always turn the power off when cleaning, and wipe with a dry cloth to remove dust, adhered printing plastics or any other material off the frame, guide rails, or wheels. Use glass cleaner or isopropyl alcohol to clean the print surface.
10. Children under 10 years should not use the printer without supervision.
11. This machine is equipped with a security protection mechanism. Do not manually move the nozzle or printing platform mechanism manually while booting up, otherwise the device will automatically power off for safety.
12. Users should comply with the laws and regulations of the corresponding countries and regions where the equipment is located (used), abide by professional ethics, pay attention to safety obligations, and strictly prohibit the use of our products or equipment for any illegal purposes. Piocreat will not be responsible for any violators' legal liability under any circustance.

1. 请勿尝试任何使用说明中没有描述的方法来使用本机，避免造成意外的人身伤害和财产损失；
2. 请勿将本机放置在易燃易爆物中或高热源附近，请将本机放置在通风、阴凉、少尘的环境内；
3. 请勿将打印机放置在振动较大或者其他不稳定的环境内，机器晃动会影响打印机打印质量；
4. 建议使用厂家推荐耗材，以免造成机器损坏；
5. 请勿在安装过程中使用其他产品电源线代替，请使用本机附带的电源线，电源插头需接插在带有地线的三孔插座；
6. 请勿在操作打印机工作时打开打印机面盖，以免影响打印；
7. 请勿在操作打印机时戴棉手套，以防可动部件对人身造成卷入挤压和切割伤害；
8. 在打印完毕后稍等片刻，带上手套后再取下打印平台，借助工具将平台上的模型取下，清理时请勿直接用手触摸；
9. 常做产品维护，定期在断电的情况下，用干布对打印机做机身清洁，拭去灰尘和粘结的打印材料、导轨上的异物；
10. 年龄在10岁以下的儿童，请勿在没有人员监督的情况下使用本机，以免造成人身伤害；
11. 本机设有安全保护机制，请勿在开机状态下手动快速移动喷头或打印平台机构，否则设备会自动断电关机保护；
12. 使用者应遵守设备所在地（使用地）相应国家、地区法律法规，恪守职业道德，注意安全义务，严禁将我司的产品或设备使用在任何非法用途上。如有违反者所应承担的相关法律责任我司概不负责。

Contents目录

Introduction 设备简介 01-01

Parameters 设备参数 02-02

Parts list 零部件清单 03-04

Equipment installation 设备安装 05-08

Circuit Wiring 电路接线 09-09

Equipment wiring 设备接线 10-13

Load filament 装载原材料 14-14

Z-axis Offset Z轴补偿 15-15

Level the platform 调平平台 16-16

Preheat settings 预热设置 17-17

Model slicing 模型切片 18-25

Start Printing 开始打印 26-27

Operation guide 操作说明 28-28

Troubleshooting 故障检修 29-30

Maintainance 机器部件保养 31-31

After-sales service card 售后服务卡 32-34

1. Introduction 设备简介

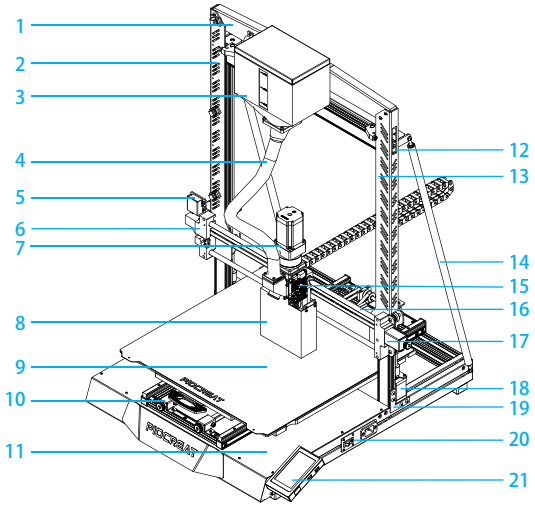

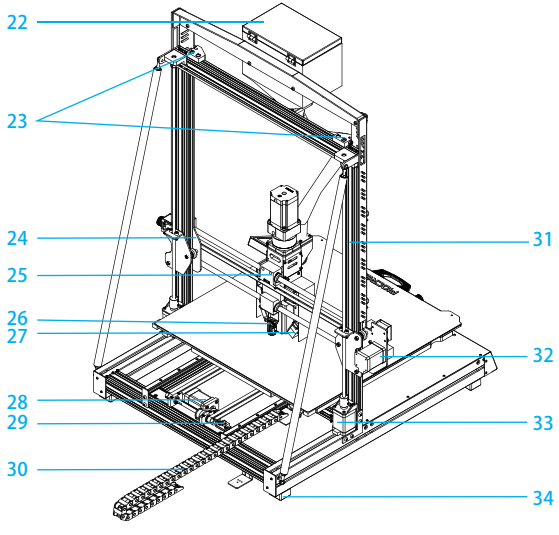

1 龙门顶部钣金Gantry top sheet metal
2 龙门左侧钣金 Gantry left sheet metal
3 装料桶Loading barrel
4 下料管Feeding tube
5 喷头信号端子Nozzle signal terminal
6 X轴限位开关X-axis limit switch
7 螺杆挤出电机Screw extrusion motor
8 螺杆套件Screw kit
9 热床平台Hot bed platform
10 Y轴皮带调节座
Y-axis belt adjustment seat
11 主板电源盒Motherboard power box
12 拉杆固定板Tie rod fixing plate
13 龙门右侧钣金Gantry right sheet metal
14 拉杆Pull rod
15 喷头控制板Nozzle control panel
16 X轴横梁导轨X-axis beam guide
17 X轴皮带调节座
X-axis belt adjustment seat
18 Z轴电机（Z2）Z-axis Motor（Z2）
19 L型连接片L-shaped connecting piece
20 电源组合开关 Power Combination Switch
21 触摸操作屏 Touch operation screen
22 料桶上盖Drum cover
23 龙门左右钣金导向组件Gantry left and right
sheet metal guide components
24 Z轴滑动滚轮组件Z-axis sliding roller assembly
25 X轴滑动滚轮组件X-axis sliding roller assembly
26 CR-Touch自动调平组件CR-Touch Auto Leveling Kit
27 喷嘴散热风扇Nozzle cooling fan
28 Y轴电机套件 Y-axis motor kit
29 Y轴限位开关 Y-axis limit switch
30 Y轴拖链组件 Y-axis energy chain components
31 Z轴T型升降丝杆 Z-axis T-type lifting screw
32 X轴电机 X-axis Motor
33 Z轴电机(Z1) Z-axis Motor (Z1)
34 支撑脚垫 Support feet

2. Equipment Parameters 设备参数

Basic Parameters 基本参数	
Model	型号	G5Ultra
Printing Size	成型尺寸	500x500x400mm
Molding Tech	成型技术	FGF
Nozzle Number	喷头数量	Single nozzle	单喷头
Slice Thickness	切片层厚	0.2-1.0mm
Nozzle Diameter	喷嘴直径	0.4-2.0mm (optional | 可选3.0), standard	标配 0.8mm, 1.0mm, 2.0mm
X-Y axis positioning accuracy	X-Y轴定位精度	±0.1mm
Filament	打印材料	PLA/PETG/PETG+10%GF/ABS/PA6/PS/GPPS/PP/PP+30%GF/TPE/TPV/TPU/15-5PH and other composite materials	等复合材料
Slice Software	可兼容切片软件	Piocreat_Slicer/Cura/Simplify3D
File Format	切片支持格式	STL、OBJ、AMF
File Transfer	打印方式	USB/WIFI
Bed Temp	热床最高温度	≤120°C
Max temp of nozzle upper section	喷嘴上段最高温度	≤360°C
Max temp of nozzle lower section	喷嘴下段最高温度	≤420°C
Continue printing after restoring power	断电续打	YES	支持
Continue printing after adding materials	断料续打	YES	支持
Auto Leveling	自动调平	YES	支持
Language	语言	English/中文/Deutsch/Español/Français/Italiano/日本語/Portugal/Русский язык/Türkce
Computer Operating System|电脑操作系统	Windows XP/7/8/10 MAC/Linux_x64
Printing Speed	打印速度	0~220mm/s
Power Supply	额定电压	Input|输入:AC100-240V 50/60Hz Output|输出:DC 24V
Nominal power	额定功率	1450W

3. Package Content 零部件清单

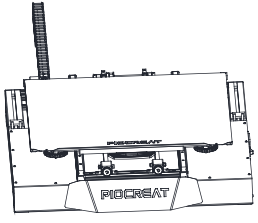

1 Base Frame｜底座 x1

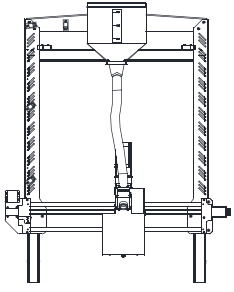

2 Gantry Frame｜龙门架 x1

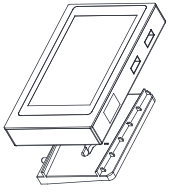

3 Display｜显示屏 x1

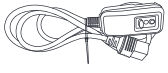

4 Power Cord｜电源 x1

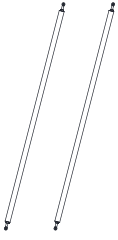

5 Pull rods｜拉杆 x2

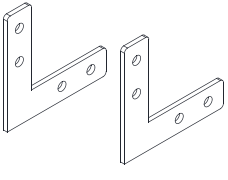

6 L-shaped connecting piece
|L型连接片 x2

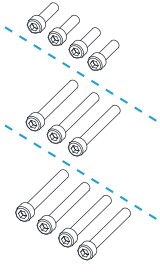

7 Sems Screw｜组合螺丝
M3*6 x4
M4*30 x3
M5*40 x4

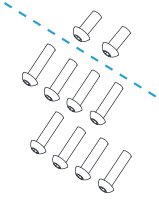

8 Hexagon flat round head screws｜内六角平圆头螺丝
M5*12 x2
M5*18 x8

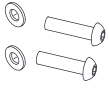

9 Hexagon flat round head screws｜内六角平圆头螺丝
M5*20 x2
M5 Flat pad｜M5平垫 x2

10 ABS granules for consumables｜耗材ABS颗粒
2KG x1

Tips: the above accessories are for reference only, in kind prevail! 注意：以上配件仅供参考，请以实物为准！

3. Package Content 零部件清单

Tool list工具包清单

11 U Disk (random color)
U盘（颜色随机）
x1

12 Wrench
扳手套件
x1

13 Open-end wrench
开口扳手
x4

14 Screwdriver
螺丝刀
x3

15 Metal blade x 1
金属铲刀

16 CR-touch x1
CR-touch

17 Nozzle0.8 x1
Nozzle1.0 x1
Nozzle2.0 x1
喷嘴

18 Socket wrench x 1
套筒扳手

19 Nozzle Cleaner x2
通针

20 Nippers x1
剪钳

21 4*150 black
rolled strip x10
扎带

Tips: the above accessories are for reference only, in kind prevail! 注意：以上配件仅供参考，请以实物为准！

4. Install the Display 安装显示屏

1 Use the No. 3 Allen wrench to fix the screen bracket with 3PCS-M4*30 Allen head screws in the position as shown in the figure;
用3号内六角扳手，将屏幕支架用3PCS-M4*30 内六角圆柱头螺丝固定在如图所示位置；

2 Then slide the touch screen kit into the mounting bracket hole;
再将触摸屏套件滑入安装支架孔位；

3 After the display is installed, please connect the display cable.
显示屏安装完成后，请将显示屏线连接好。

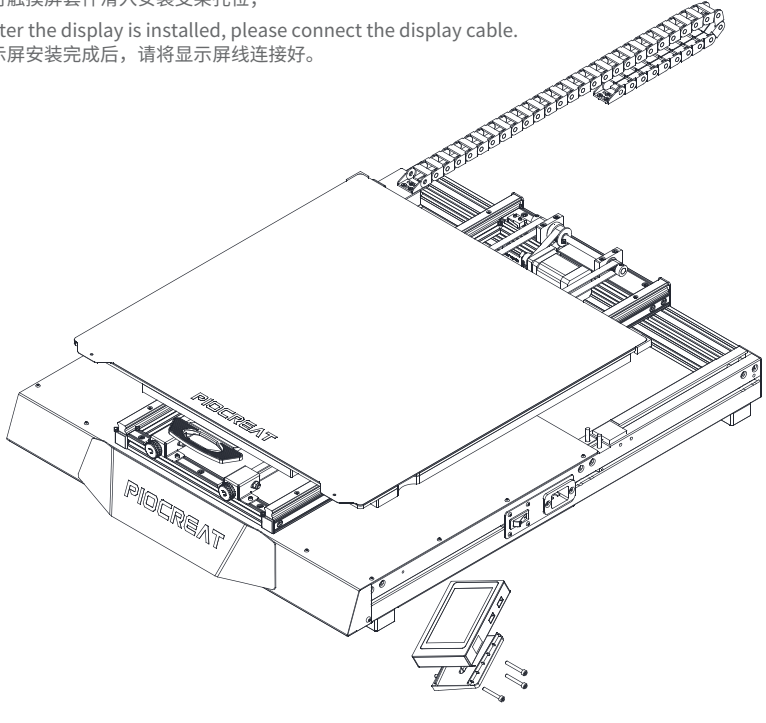

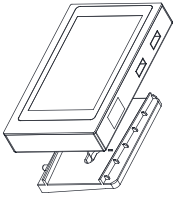

3 Display | 显示屏 x1

7 M4x30 Hexagon flat round head screws x3
| M4x30 内六角圆柱头螺丝 x3