FCC Test Report

FCC ID: 2A2FOACHA0SOCKET

Product: Universal Radio Socket

Trade Mark: Antilatency

Model Number: ACHA0Socket_RUA

Family Model: N/A

Report No.: S21061600302001

Prepared for

ALT Limited Liability Company

5 Nobelya str., off. 66, Skolkovo, Moscow, Russia, 121205

Prepared by

Shenzhen NTEK Testing Technology Co., Ltd.

1/F, Building E, Fenda Science Park, Sanwei Community,
Xixiang Street Bao'an District, Shenzhen P.R. China
Tel. 400-800-6106, 0755-2320 0050, 0755-2320 0090
Website:http://www.ntek.org.cn

TEST RESULT CERTIFICATION

Applicant's Name .....: ALT Limited Liability Company

Address.....: 5 Nobelya str., off. 66, Skolkovo, Moscow, Russia, 121205

Manufacturer's Name.....: ALT Limited Liability Company

Address.....: 5 Nobelya str., off. 66, Skolkovo, Moscow, Russia, 121205

Factory's Name .....: ALT Limited Liability Company

Address.....: 5B Tekstilshikov str., Voronezh, Russia, 394026

Factory's Name .....: GUANGZHOU ALT TECHNOLOGY LIMITED

Address.....: Room 202, Block 2, Kaisheng Building 168, Chaoyang dong lu, Dashi jiedao, Panyu district, Guangzhou, Guangdong Province, China, 511430

Product description

Product name.....: Universal Radio Socket

Model and/or type reference .: ACHA0Socket_RUA

Family Model.....: N/A

Standards .....: FCC Part15B
ANSI C63.4:2014

This device described above has been tested by NTEK, and the test results show that the equipment under test (EUT) is in compliance with Part 15 of FCC Rules. And it is applicable only to the tested sample identified in the report.

This report shall not be reproduced except in full, without the written approval of NTEK, this document may be altered or revised by NTEK, personnel only, and shall be noted in the revision of the document.

Date of Test .....:

Date (s) of performance of tests .....: 16 Jun. 2021 ~ 12 Aug. 2021

Date of Issue .....: 12 Aug. 2021

Test Result.....: **Pass**

Testing Engineer : Mary. Hu

(Mary Hu)

Authorized Signatory : Alex

(Alex Li)

Table of Contents **Page**

1 . TEST SUMMARY 4

1.1 TEST FACILITY 5

1.2 MEASUREMENT UNCERTAINTY 5

2 . GENERAL INFORMATION 6

2.1 GENERAL DESCRIPTION OF EUT 6

2.2 DESCRIPTION OF TEST SETUP 8

2.3 DESCRIPTION TEST PERIPHERAL AND EUT PERIPHERAL 9

2.4 MEASUREMENT INSTRUMENTS LIST 10

3 . EMC EMISSION TEST 11

3.1 CONDUCTED EMISSION MEASUREMENT 11

3.1.1 POWER LINE CONDUCTED EMISSION 11

3.1.2 TEST PROCEDURE 12

3.1.3 TEST SETUP 12

3.1.4 EUT OPERATING CONDITIONS 12

3.1.5 TEST RESULTS 13

3.2 RADIATED EMISSION MEASUREMENT 14

3.2.1 LIMITS OF RADIATED EMISSION MEASUREMENT 14

3.2.2 TEST PROCEDURE 15

3.2.3 TEST SETUP 16

3.2.4 TEST RESULTS 17

3.2.5 TEST RESULTS(1000~18000MHz) 19

1. TEST SUMMARY

Test procedures according to the technical standards:

EMC Emission				
Standard	Test Item	Limit	Judgment	Remark
FCC Part15B ANSI C63.4: 2014	Conducted Emission	Class B	PASS	
	Radiated Emission	Class B	PASS	

NOTE:

(1) 'N/A' denotes test is not applicable in this Test Report

(2) For client's request and manual description, the test will not be executed.

1.1 TEST FACILITY

Shenzhen NTEK Testing Technology Co., Ltd
Add. : 1/F, Building E, Fenda Science Park, Sanwei Community, Xixiang Street, Bao'an District, Shenzhen 518126 P.R. China.

IC-Registration The Certificate Registration Number is 9270A.
CAB identifier:CN0074

FCC- Accredited Test Firm Registration Number: 463705.
Designation Number: CN1184

1.2 MEASUREMENT UNCERTAINTY

The reported uncertainty of measurement **y** ± **U**, where expended uncertainty **U** is based on a standard uncertainty multiplied by a coverage factor of **k=2**, providing a level of confidence of approximately **95** %.

A. Conducted Measurement :

Test Site	Method	Measurement Frequency Range	U, (dB)	NOTE
NTEKC01	ANSI	150 KHz ~ 30MHz	±2.80dB	

B. Radiated Measurement :

Test Site	Method	Measurement Frequency Range	U, (dB)	NOTE
NTEKA01	ANSI	30MHz~1000MHz	±2.64dB	
		1GHz~6GHz	±2.40dB	
		6GHz~26.5GHz	±2.52dB	

2. GENERAL INFORMATION

2.1 GENERAL DESCRIPTION OF EUT

Equipment	Universal Radio Socket
Trade Mark	Antilatency
Model Name	ACHA0Socket_RUA
Family Model	N/A
Model Difference	N/A
Product Description	The EUT is a Universal Radio Socket. Connecting I/O port: Micro USB, Earphone Operation Frequency: 2.480GHz Based on the application, features, or specification exhibited in User's Manual, the EUT is considered as an ITE/Computing Device. More details of EUT technical specification, please refer to the User's Manual.
Power Source	DC 5V from type-c
Adapter	N/A
HW Version	3
SW Version	1

2.1.1 DESCRIPTION OF TEST MODES

To investigate the maximum EMI emission characteristics generates from EUT, the test system was pre-scanning tested base on the consideration of following EUT operation mode or test configuration mode which possible have effect on EMI emission level. Each of these EUT operation mode(s) or test configuration mode(s) mentioned above was evaluated respectively.

Pretest Mode	Description
Mode 1	USB Data Transmission

For Conducted Test	
Final Test Mode	Description
Mode 1	USB Data Transmission

For Radiated Test	
Final Test Mode	Description
Mode 1	USB Data Transmission

2.2 DESCRIPTION OF TEST SETUP

CE

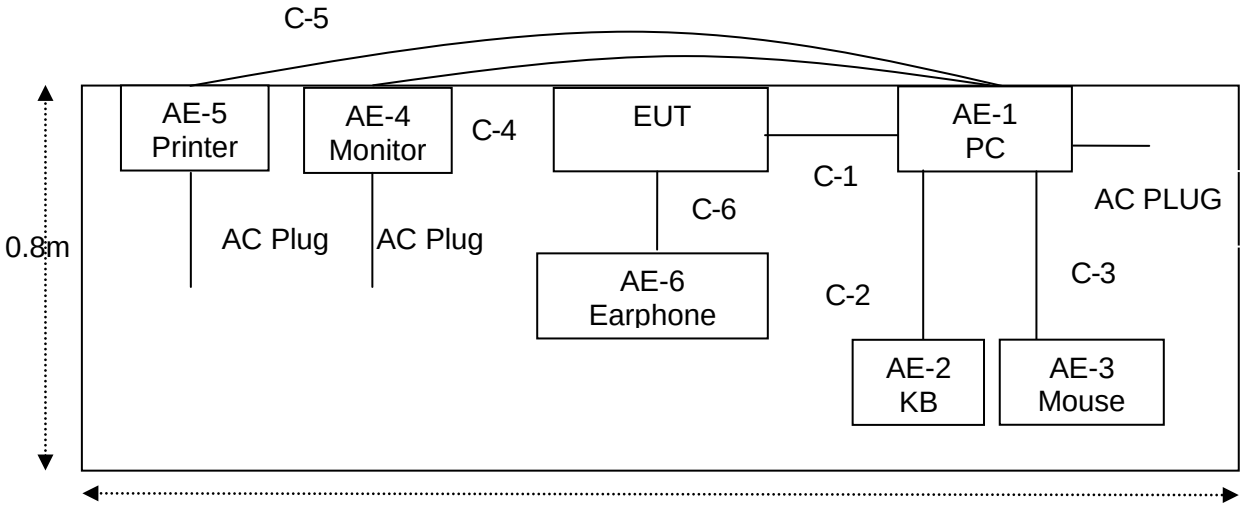

RE

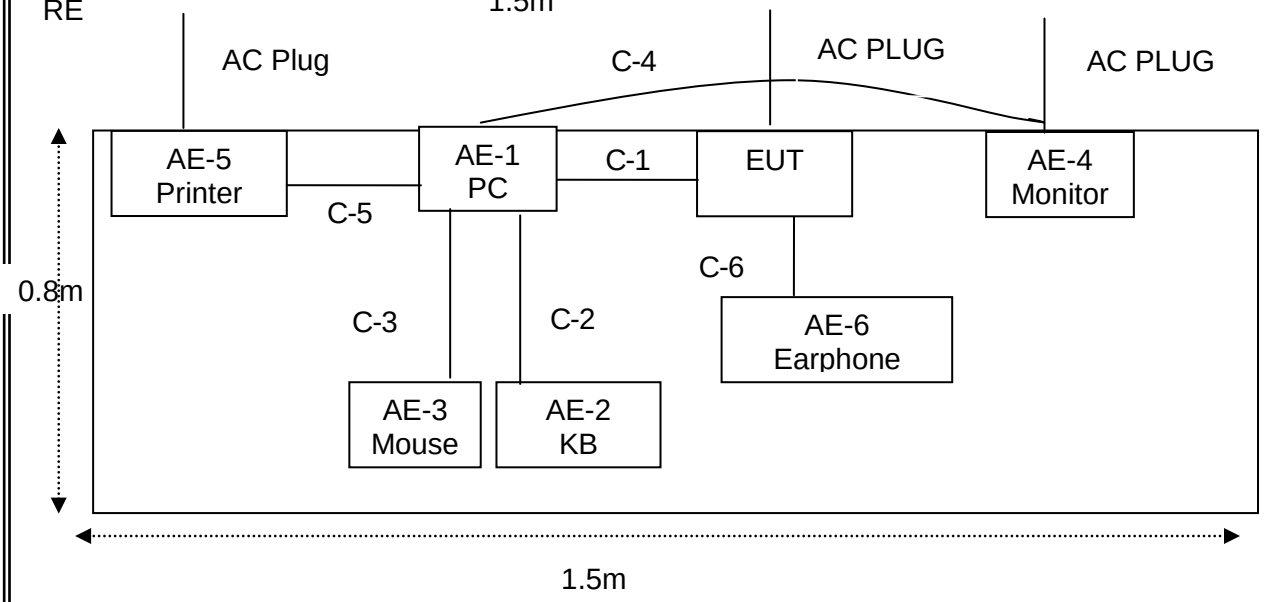

2.3 DESCRIPTION TEST PERIPHERAL AND EUT PERIPHERAL

The EUT has been tested as an independent unit together with other necessary accessories or support units. The following support units or accessories were used to form a representative test configuration during the tests.

Item	Equipment	Brand	Model/Type No.	Series No.	Note
AE-1	PC	DELL	FT4Y23X	N/A	Peripherals
AE-2	KB	N/A	N/A	N/A	Peripherals
AE-3	Mouse	DELL	MS111-P	N/A	Peripherals
AE-4	Monitor	DELL	IN2020MB	N/A	Peripherals
AE-5	Printer	Canon	L11121E	N/A	Peripherals
AE-6	Earphone	N/A	N/A	N/A	Peripherals

Item	Cable Type	Shielded Type	Ferrite Core	Length	Note
C-1	USB Cable	NO	NO	1.0m	
C-2	USB Cable	NO	NO	1.2m	
C-3	USB Cable	NO	NO	1.2m	
C-4	HDMI Cable	YES	YES	1.0m	
C-5	USB Cable	NO	NO	1.2m	
C-6	Earphone Cable	NO	NO	1.2m	

Note:

(1) The support equipment was authorized by Declaration of Confirmation.
(2) For detachable type I/O cable should be specified the length in cm in 『Length』 column.
(3) “YES” means “shielded” “with core”; “NO” means “unshielded” “without core”.

2.4 MEASUREMENT INSTRUMENTS LIST

Radiation Test equipment

Item	Kind of Equipment	Manufacturer	Type No.	Serial No.	Last calibration	Calibrated until	Calibration period
1	Spectrum Analyzer	Agilent	E4407B	MY45108040	2021.04.27	2022.04.26	1 year
2	Test Receiver	R&S	ESPI	101318	2021.04.27	2022.04.26	1 year
3	Bilog Antenna	TESEQ	CBL6111D	31216	2021.03.29	2022.03.28	1 year
4	50Ω Coaxial Switch	Anritsu	MP59B	6200264416	2021.04.27	2022.04.26	1 year
5	Spectrum Analyzer	ADVANTEST	R3132	150900201	2021.04.27	2022.04.26	1 year
6	Horn Antenna	EM	EM-AH-10180	2011071402	2021.03.29	2022.03.28	1 year
7	Horn Ant	Schwarzbeck	BBHA 9170	9170-181	2021.04.27	2022.04.26	1 year
8	Amplifier	EMC	EMC051835SE	980246	2021.04.27	2022.04.26	1 year
9	Loop Antenna	ARA	PLA-1030/B	1029	2021.04.27	2022.04.26	1 year
10	Power Meter	DARE	RPR3006W	15I00041SNO84	2021.04.27	2022.04.26	1 year
11	Power Sensor	R&S	URV4-Z4	0395.1619.05	2021.04.27	2022.04.26	1 year
12	Test Cable (30MHz-1GHz)	N/A	R-02	N/A	2019.06.28	2022.06.27	3 year
13	High Test Cable(1G-40 GHz)	N/A	R-03	N/A	2019.06.28	2022.06.27	3 year
14	High Test Cable(1G-40 GHz)	N/A	R-04	N/A	2019.06.28	2022.06.27	3 year
15	Test Receiver	R&S	ESCI	101160	2021.04.27	2022.04.26	1 year

AC Conduction Test equipment

Item	Kind of Equipment	Manufacturer	Type No.	Serial No.	Last calibration	Calibrated until	Calibration period
1	Test Receiver	R&S	ESCI	101160	2021.04.27	2022.04.26	1 year
2	LISN	R&S	ENV216	101313	2021.04.27	2022.04.26	1 year
3	LISN	SCHWARZBECK	NNLK 8129	8129245	2021.04.27	2022.04.26	1 year
4	50Ω Coaxial Switch	ANRITSU CORP	MP59B	6200983704	2020.05.11	2023.05.10	3 year
5	Test Cable (9KHz-30MHz)	N/A	C01	N/A	2020.05.11	2023.05.10	3 year
6	Test Cable (9KHz-30MHz)	N/A	C02	N/A	2020.05.11	2023.05.10	3 year
7	Test Cable (9KHz-30MHz)	N/A	C03	N/A	2020.05.11	2023.05.10	3 year

Note: Each piece of equipment is scheduled for calibration once a year except the Test Cable which is scheduled for calibration every 3 years.

3. EMC EMISSION TEST

3.1 CONDUCTED EMISSION MEASUREMENT

3.1.1 POWER LINE CONDUCTED EMISSION (Frequency Range 150KHz-30MHz)

FREQUENCY (MHz)	Class A (dBuV)		Class B (dBuV)	
	Quasi-peak	Average	Quasi-peak	Average
0.15 -0.5	79.00	66.00	66 - 56 *	56 - 46 *
0.50 -5.0	73.00	60.00	56.00	46.00
5.0 -30.0	73.00	60.00	60.00	50.00

Note:

(1) The tighter limit applies at the band edges.

(2) The limit of " * " marked band means the limitation decreases linearly with the logarithm of the frequency in the range.

The following table is the setting of the receiver

Receiver Parameters	Setting
Attenuation	10 dB
Start Frequency	0.15 MHz
Stop Frequency	30 MHz
IF Bandwidth	9 kHz

3.1.2 TEST PROCEDURE

a. The EUT was placed 0.8 meters from the horizontal ground plane with EUT being connected to the power mains through a line impedance stabilization network (LISN). All other support equipments powered from additional LISN(s). The LISN provide 50 Ohm/ 50uH of coupling impedance for the measuring instrument.
b. Interconnecting cables that hang closer than 40 cm to the ground plane shall be folded back and forth in the center forming a bundle 30 to 40 cm long.
c. I/O cables that are not connected to a peripheral shall be bundled in the center. The end of the cable may be terminated, if required, using the correct terminating impedance. The overall length shall not exceed 1 m.
d. LISN at least 80 cm from nearest part of EUT chassis.
e. For the actual test configuration, please refer to the related Item –EUT Test Photos.

3.1.3 TEST SETUP

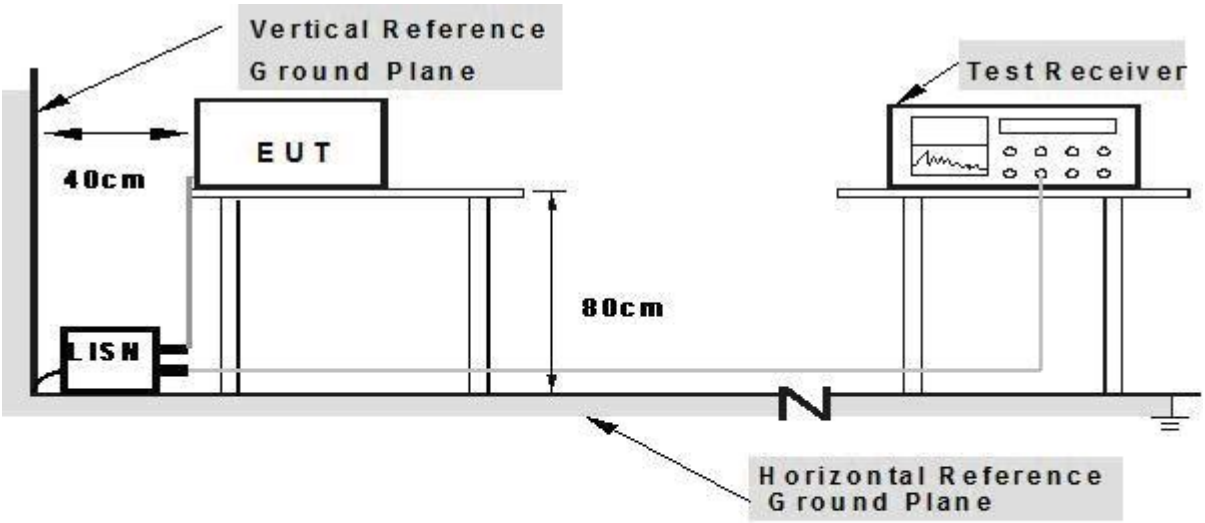

Note: 1.Support units were connected to second LISN.
2.Both of LISNs (AMN) are 80 cm from EUT and at least 80 from other units and other metal planes

3.1.4 EUT OPERATING CONDITIONS

The EUT tested system was configured as the statements of **2.3** Unless otherwise a special operating condition is specified in the follows during the testing.

3.1.5 TEST RESULTS

EUT:	Universal Radio Socket	Model Name. :	ACHA0Socket_RUA
Temperature:	24.5 ℃	Relative Humidity:	52%
Pressure:	1010hPa	Test Date:	2021-06-22
Test Mode:	Mode 1	Phase :	L
Test Voltage:	DC 5V from PC AC 120V/60Hz		

Frequency (MHz)	Reading Level (dBμV)	Correct Factor (dB)	Measure-ment (dBμV)	Limits (dBμV)	Margin (dB)	Remark
0.1539	46.37	9.56	55.93	65.78	-9.85	QP
0.1539	25.73	9.56	35.29	55.78	-20.49	AVG
0.2020	37.89	9.55	47.44	63.52	-16.08	QP
0.2020	20.37	9.55	29.92	53.52	-23.60	AVG
0.4259	28.00	9.55	37.55	57.33	-19.78	QP
0.4259	19.34	9.55	28.89	47.33	-18.44	AVG
0.6099	28.07	9.55	37.62	56.00	-18.38	QP
0.6099	17.95	9.55	27.50	46.00	-18.50	AVG
0.7980	29.81	9.55	39.36	56.00	-16.64	QP
0.7980	17.46	9.55	27.01	46.00	-18.99	AVG
15.7578	26.59	9.79	36.38	60.00	-23.62	QP
15.7578	15.58	9.79	25.37	50.00	-24.63	AVG

Remark:
1. All readings are Quasi-Peak and Average values.
2. Factor = Insertion Loss + Cable Loss.

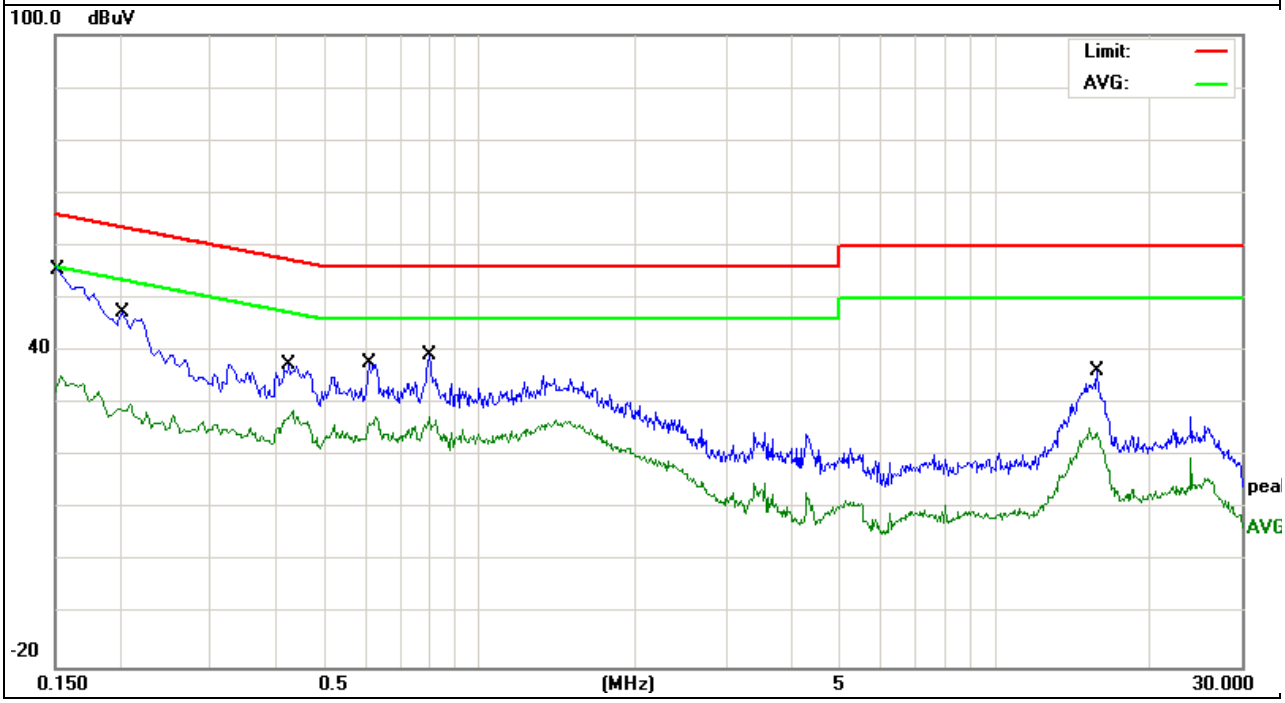

EUT:	Universal Radio Socket	Model Name. :	ACHA0Socket_RUA
Temperature:	24.5 ℃	Relative Humidity:	52%
Pressure:	1010hPa	Test Date:	2021-06-22
Test Mode:	Mode 1	Phase :	N
Test Voltage:	DC 5V from PC AC 120V/60Hz		

Frequency (MHz)	Reading Level (dBμV)	Correct Factor (dB)	Measure-ment (dBμV)	Limits (dBμV)	Margin (dB)	Remark
0.1500	47.80	9.55	57.35	65.99	-8.64	QP
0.1500	27.85	9.55	37.40	55.99	-18.59	AVG
0.1739	43.95	9.55	53.50	64.77	-11.27	QP
0.1739	27.54	9.55	37.09	54.77	-17.68	AVG
0.2500	35.57	9.53	45.10	61.75	-16.65	QP
0.2500	21.02	9.53	30.55	51.75	-21.20	AVG
0.8699	29.89	9.54	39.43	56.00	-16.57	QP
0.8699	17.78	9.54	27.32	46.00	-18.68	AVG
1.5580	28.03	9.57	37.60	56.00	-18.40	QP
1.5580	17.56	9.57	27.13	46.00	-18.87	AVG
14.8818	27.67	9.75	37.42	60.00	-22.58	QP
14.8818	17.12	9.75	26.87	50.00	-23.13	AVG

Remark:

1. All readings are Quasi-Peak and Average values.
2. Factor = Insertion Loss + Cable Loss.

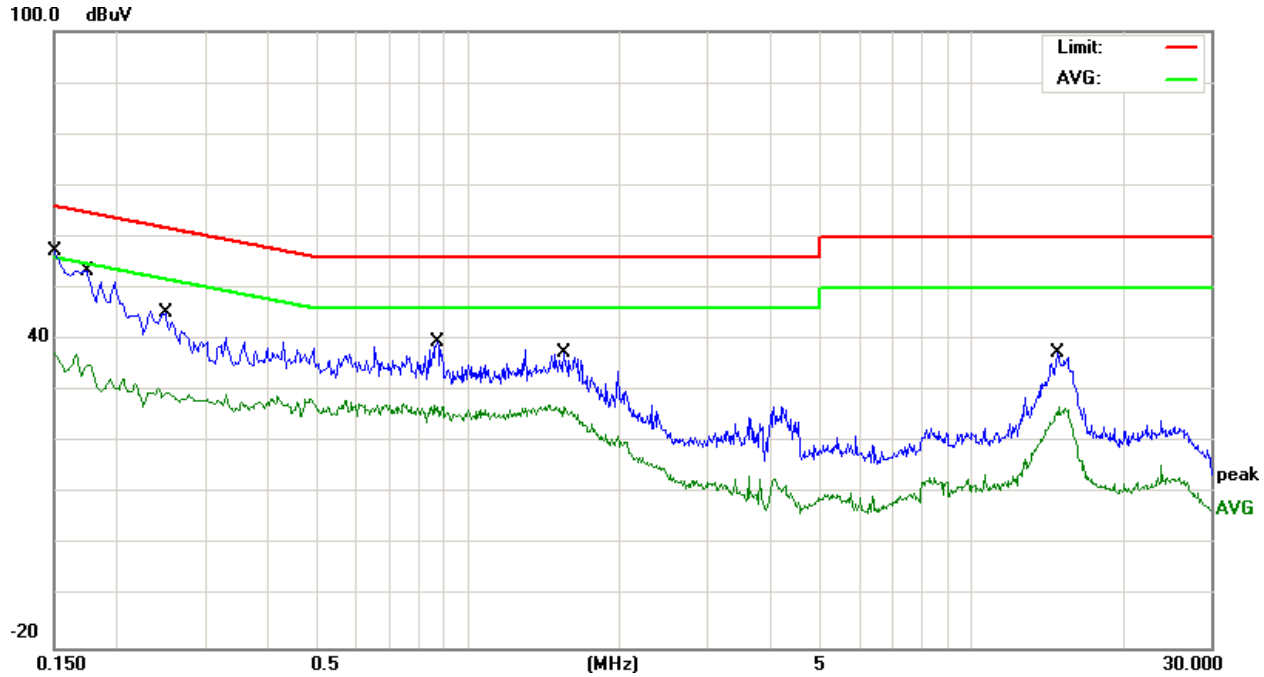

3.2 RADIATED EMISSION MEASUREMENT

3.2.1 LIMITS OF RADIATED EMISSION MEASUREMENT

FREQUENCY (MHz)	Class A (at 10m)	Class B (at 3m)
	dBuV/m	dBuV/m
30 ~ 88	39.0	40.0
88 ~ 216	43.5	43.5
216 ~ 960	46.5	46.0
Above 960	49.5	54.0

Notes:

(1) The limit for radiated test was performed according to as following: FCC PART 15B /ICES-003.

(2) The tighter limit applies at the band edges.

(3) Emission level (dBuV/m)=20log Emission level (uV/m).

3.2.2 TEST PROCEDURE

Test Arrangement for Radiated Emissions up to 1 GHz

a. The EUT was placed on the top of a rotating table 0.8 meters above the ground at an accredited test facility. The table was rotated 360 degrees to determine the position of the highest radiation.

b. The EUT was set 3 meters away from the interference-receiving antenna, which was mounted on the top of a variable-height antenna tower.

c. The antenna is a broadband antenna, and its height is varied from one meter to four meters above the ground to determine the maximum value of the field strength. Both horizontal and vertical polarizations of the antenna are set to make the measurement.

d. For each suspected emission, the EUT was arranged to its worst case and then the antenna was tuned to heights from 1 meter to 4 meters and the rotatable table was turned from 0 degrees to 360 degrees to find the maximum reading.

Note: The resolution bandwidth and video bandwidth of test receiver/spectrum analyzer is 120kHz for quasi-peak detection (QP) at frequency below 1GHz.

Test Arrangement for Radiated Emissions above 1 GHz.

a. The EUT was placed on the top of a rotating table 0.8 meters above the ground at an accredited chamber room. The table was rotated 360 degrees to determine the position of the highest radiation.

b. The EUT was set 3 meters away from the interference-receiving antenna, which was mounted on the top of a variable-height antenna tower.

c. The height of antenna can be varied from one meter to four meters, the height of adjustment depends on the EUT height and the antenna 3dB beamwidth both, to detect the maximum value of the field strength. Both horizontal and vertical polarizations of the antenna are set to make the measurement.

d. For each suspected emission, the EUT was arranged to its worst case and then the antenna was tuned to heights and the rotatable table was turned from 0 degrees to 360 degrees to find the maximum reading.

Note：For the hand-held device, the EUT should be measured for all 3 axes and only the worst case is recorded in the report

During the radiated emission test, according to ANSI C63.4-2014(4.2), the Spectrum Analyzer was set with the following configurations:

Frequency Band (MHz)	Function	Resolution bandwidth	Video Bandwidth

30 to 1000	QP	120 kHz	300 kHz
Above 1000	Peak	1 MHz	3 MHz
	Avg	1 MHz	10 Hz

3.2.3 TEST SETUP

For Radiated Emission 30~1000MHz

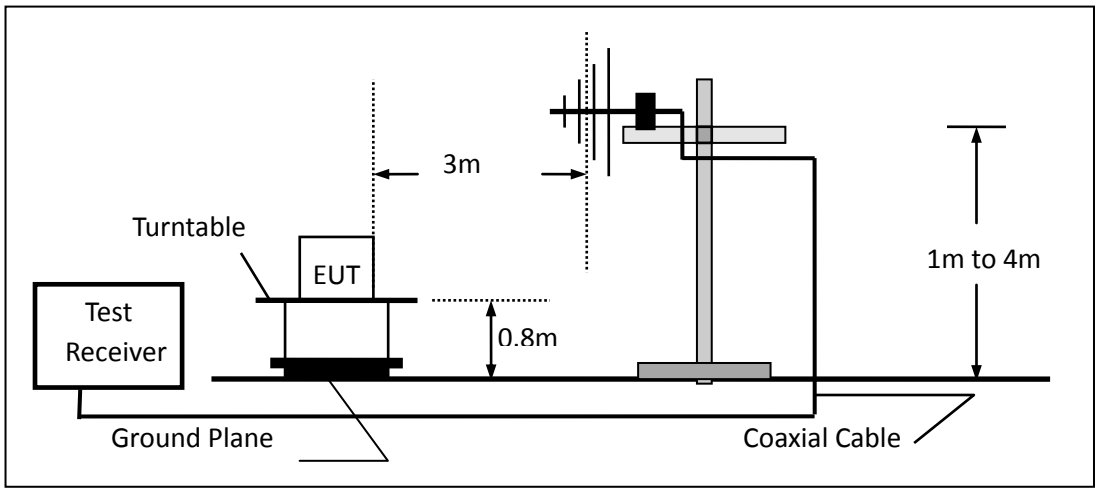

(B) Radiated Emission Test Set-Up Frequency Above 1GHz

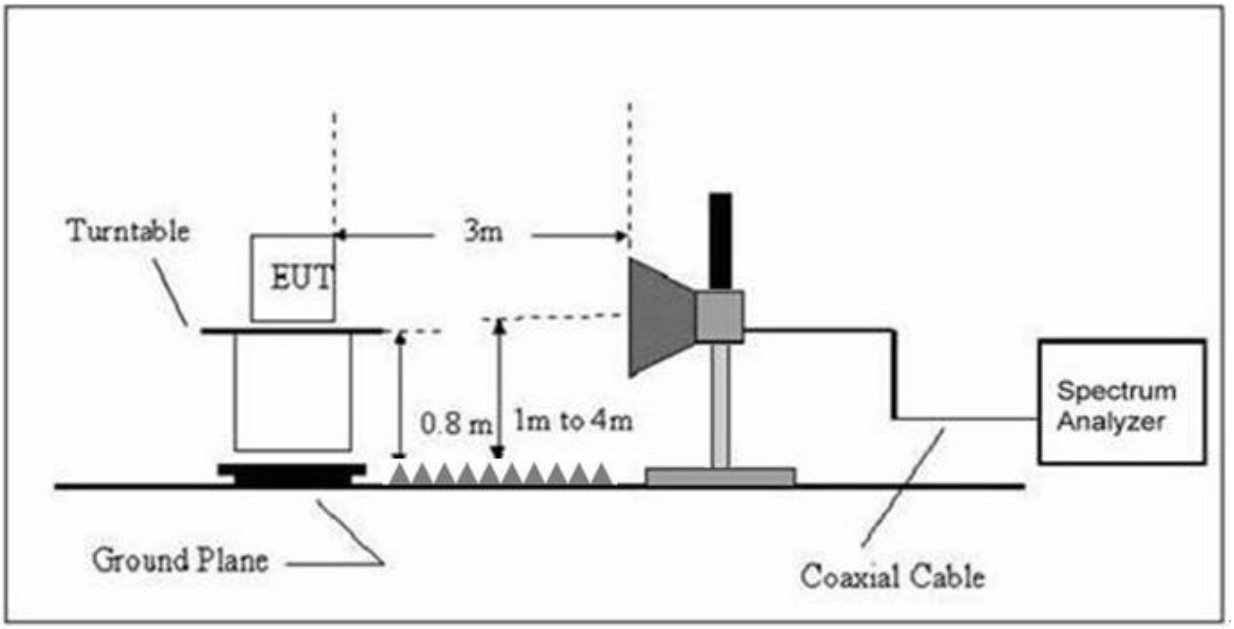

3.2.4 TEST RESULTS

TEST RESULTS (30~1000 MHz)

EUT:	Universal Radio Socket	Model Name:	ACHA0Socket_RUA
Temperature:	24.5 ℃	Relative Humidity:	55%
Pressure:	1010 hPa	Test Date :	2021-06-24
Test Mode :	Mode 1	Polarization :	Horizontal
Test Power :	DC 5V from PC AC 120V/60Hz		

Polar (H/V)	Frequency (MHz)	Meter Reading (dBuV)	Factor (dB)	Emission Level (dBuV/m)	Limits (dBuV/m)	Margin (dB)	Remark
H	72.0841	25.09	7.01	32.10	40.00	-7.90	QP
H	74.6568	22.96	7.14	30.10	40.00	-9.90	QP
H	167.8241	23.89	11.10	34.99	43.50	-8.51	QP
H	462.3455	20.89	19.43	40.32	46.00	-5.68	QP
H	473.8346	21.15	19.76	40.91	46.00	-5.09	QP
H	497.6764	20.68	20.61	41.29	46.00	-4.71	QP

Remark:
Factor = Antenna Factor + Cable Loss - Amplifier.

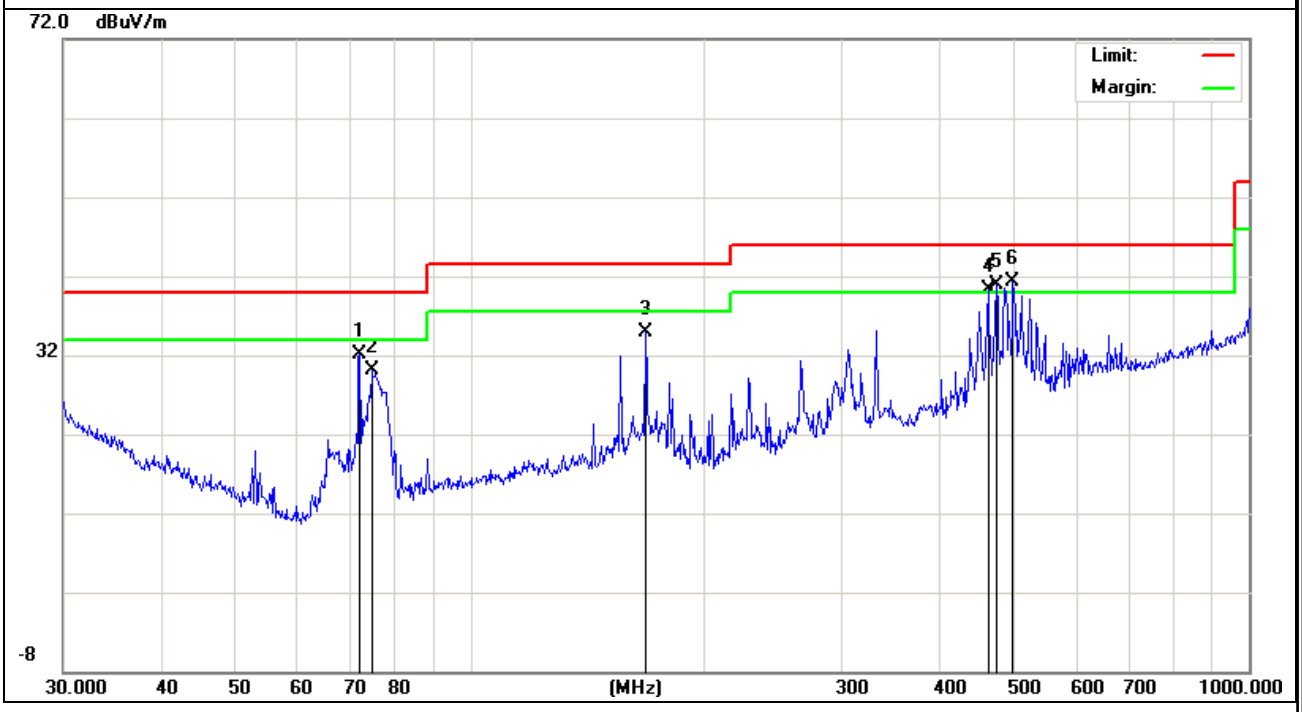

EUT:	Universal Radio Socket	Model Name :	ACHA0Socket_RUA
Temperature:	24.5 ℃	Relative Humidity:	55%
Pressure:	1010 hPa	Test Date :	2021-06-24
Test Mode :	Mode 1	Polarization :	Vertical
Test Power :	DC 5V from PC AC 120V/60Hz		

Polar (H/V)	Frequency (MHz)	Meter Reading (dBuV)	Factor (dB)	Emission Level (dBuV/m)	Limits (dBuV/m)	Margin (dB)	Remark
V	72.0841	20.79	7.01	27.80	40.00	-12.20	QP
V	75.7112	20.79	7.28	28.07	40.00	-11.93	QP
V	155.9099	18.23	12.20	30.43	43.50	-13.07	QP
V	167.8241	19.74	11.10	30.84	43.50	-12.66	QP
V	462.3455	16.24	19.43	35.67	46.00	-10.33	QP
V	801.7862	15.60	25.02	40.62	46.00	-5.38	QP

Remark:

Factor = Antenna Factor + Cable Loss - Amplifier.

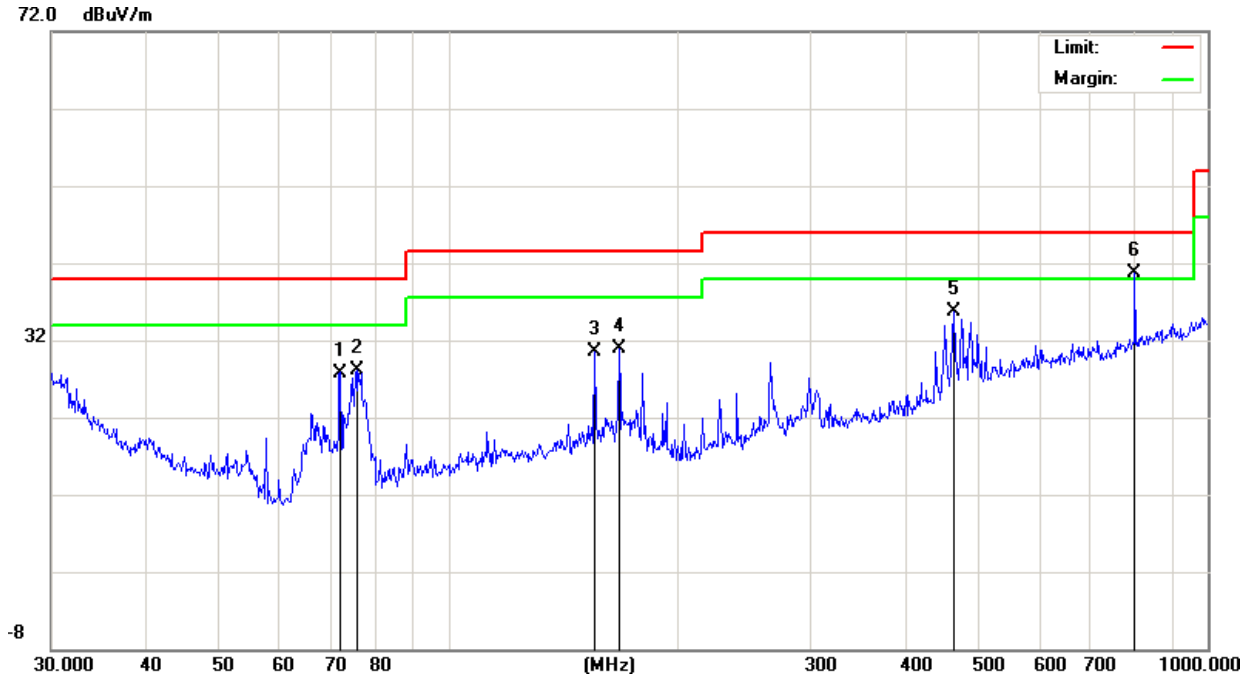

3.2.5 TEST RESULTS(1000~18000MHz)

EUT:	Universal Radio Socket	Model Name :	ACHA0Socket_RUA
Temperature:	24.5 ℃	Relative Humidity:	55%
Pressure:	1010 hPa	Test Date :	2021-06-25
Test Mode :	Mode 1		
Test Power :	DC 5V from PC AC 120V/60Hz		

All the modulation modes have been tested, and the worst result was report as below:

Polar (H/V)	Frequency (MHz)	Meter Reading (dBμV/m)	Factor (dB)	Emission Level (dBμV/m)	Limits (dBμV/m)	Margin (dB)	Remark
V	14430.00	36.12	22.45	58.57	74.00	-15.43	peak
V	14430.00	23.45	22.45	45.90	54.00	-8.10	AVG
V	15960.00	34.68	24.67	59.35	74.00	-14.65	peak
V	15960.00	22.53	24.67	47.20	54.00	-6.80	AVG
V	17320.00	34.55	25.19	59.74	74.00	-14.26	peak
V	17320.00	23.71	25.19	48.90	54.00	-5.10	AVG
H	14345.00	35.51	22.50	58.01	74.00	-15.99	peak
H	14345.00	23.70	22.50	46.20	54.00	-7.80	AVG
H	16002.50	34.60	24.75	59.35	74.00	-14.65	peak
H	16002.50	22.75	24.75	47.50	54.00	-6.50	AVG
H	16852.50	34.14	25.41	59.55	74.00	-14.45	peak
H	16852.50	23.79	25.41	49.20	54.00	-4.80	AVG

Remark:
Emission Level= Meter Reading+ Factor, Margin= Emission Level- Limit

Remark:
Result = Reading + Correct, Over Limit= Result - Limit
Note: Only the worst results data points are reported in the report.
Other emissions are attenuated 20dB below the limit that does not recorded in the report.

END OF REPORT