OPERATIONAL MANUAL
Universal Radio Socket

CONTENTS:

Federal Communications Commission (FCC) Notice 2
Intellectual Property 3
Note 3
Disclaimer of Warranties; Exclusion of Liability 3
Special Information 4
Safety Precautions 4
Precaution on Terminology 4
1. Introduction 5
2. Product Features and Specifications 5
3. Device design and principle of operation 7
3.1. Purpose of sockets 7
3.2. Purpose of indication 7
3.3. External power source 8
3.4. Extension module support 8
3.5. Universal Radio Socket Operating Modes 8
4. Universal Radio Socket Configuration 10
4.1. Access point properties 10
4.2. Client properties 10
5. Universal Radio Socket Firmware Update 11
6. Operational safety 12
7. Installation and operation 12
8. Marking, packaging, storage, transportation, disposal 13
8.1. Package marking 13
8.2. Packaging 13
8.3. Product storage conditions 13
8.4. Storage period 13
8.5. Transportation conditions 13
8.6. Preparation for transportation 14
8.7. Disposal of the product 14
9. Warranty 14

Federal Communications Commission (FCC) Notice

This equipment has been tested and found to comply with the limits of a Class B digital device, pursuant to Part 15 of the FCC Rules. These limits are designed to provide reasonable protection against harmful interference in a residential installation.

This equipment generates, uses and can radiate radio frequency energy and, if not installed and used in accordance with the instructions, may cause harmful interference to radio communications.

However, there is no guarantee that interference will not occur in particular installations, if this equipment does cause harmful interference to radio or television reception, which can be determined by turning the equipment off and on, the user is encouraged to try to correct the interference by one or more of the following measures:

1. Reorient / Relocate the receiving antenna.
2. Increase the separation between the equipment and receiver.
3. Connect the equipment into an outlet on a circuit different from that the receiver is connected.
4. Consult the dealer or an experienced radio / TV technician for help.

To assure continued compliance, any changes or modifications not expressly approved by the party.

Responsible for compliance could void the user's authority to operate this equipment. Use only undamaged USB type C cable to power the device. It is forbidden to cut off the antenna of the device!

This device complies with Part 15 of the FCC Rules. Operation is subject to the following two conditions:

1. This device may not cause harmful interference.
2. This device must accept any interference received, including interference that may cause undesired operation.

FCC Radiation Exposure Statement:

The equipment compiles with FCC Radiation exposure limits set forth for uncontrolled equipment. The product is intended for external use only.

FCC CAUTION: Changes or modifications not expressly approved by the manufacturer responsible for compliance could void the user's authority to operate the equipment.

Note: The manufacturer is not responsible for any radio or tv interference caused by unauthorized modifications to this equipment. Such modifications could void the user's authority to operate the equipment.

Intellectual Property Notice

Antilatency is registered trademark of ALT LLC. Other company names and product names in this document are the trademarks or registered trademarks of their respective companies.

All Intellectual Property, as defined below, owned by or which is otherwise the property of ALT LLC or its respective suppliers relating to the Antilatency device, including but not limited to, accessories, parts, or software relating thereto (the "device"), is proprietary to ALT LLC and protected under federal laws, state laws, and international treaty provisions. Intellectual Property includes, but is not limited to, inventions (patentable or unpatentable), patents, trade secrets, copyrights, software, computer programs, and related documentation and other works of authorship. You may not infringe or otherwise violate the rights secured by the Intellectual Property. Moreover, you agree that you will not (and will not attempt to) modify, prepare derivative works of, reverse engineer, decompile, disassemble, or otherwise attempt to create source code from the software. No title to or ownership in the Intellectual Property is transferred to you. All applicable rights of the Intellectual Property shall remain with ALT LLC and its suppliers.

Note

This operational manual contains information that is necessary for using Universal Radio Socket. Please read and understand this manual before using the product. Keep this manual in a safe place where it will be available for reference during operation.

All rights reserved. No part of this publication may be reproduced, stored in a retrieval system, or transmitted, in any form, or by any means, mechanical, electronic, photocopying, recording, or otherwise, without the prior written permission of ALT LLC.

No patent liability is assumed with respect to the use of the information contained herein. Moreover, because ALT LLC is constantly striving to improve its high-quality products, the information contained in this manual is the subject to change without notice. Every precaution has been taken in the preparation of this manual. Nevertheless, ALT LLC assumes no responsibility for errors or omissions. Neither is any liability assumed for damages resulting from the use of the information contained in this publication.

Disclaimer of Warranties; Exclusion of Liability

Except as set forth in the warranty contained on the warranty page enclosed with the product, the purchaser takes the product "As is", and ALT LLC makes no express or implied warranty of any kind whatsoever with respect to the product, including but not limited to the merchantability of the product or its fitness for any particular purpose or use; the design, condition or quality of the product; the performance of the product; the workmanship of the product or the components contained therein; or compliance of the product with the requirements of any law, rule, specification or contract pertaining thereto. Nothing contained in the operational manual shall be construed to create an express or implied warranty of any kind whatsoever with respect to the product.

In addition, ALT LLC shall not be liable for any damages of any kind resulting from the purshase or use of the product or arising from the breach of the express warranty, including incidental, special or consequential damages, or loss of anticipated profits or benefits.

Subject to the warranty conditions, the company provides technical support to all users.

Special Information

⚠	Indicates a potentially hazardous situation which, if not avoided, may result in minor or moderate injury, or property damage.
ⓘ	Additional information to read as required. This information is provided to increase understanding or make operation easier.

Safety Precautions

The following notation is used in this manual to provide precautions required to ensure safe usage of the Universal Radio Socket.

The safety precautions that are provided are extremely important to ensure safety. Always read and heed the information provided in all safety precautions.

Precaution on Terminology

ADN – an Antilatency Device Network. ADN determines the way of connecting Antilatency devices to each other as elements of a single network.

Alt is an optical inertial tracking module. The Alt is placed on objects that are being tracked and determines their position in space in relation to infrared markers. Alt has a tracking speed of up to 2000 measurements per second and a low hardware latency of 2 ms.

Antilatency Hardware Extension Interface is an interface for accessing the GPIO of a socket. You can use it, for example, to read external triggers or control the brightness of LEDs.

Antilatency Radio Protocol – a proprietary radio protocol to transmit data. The protocol operates on the 2.4 GHz frequency. This radio protocol is optimized for real time performance and has low latency while transmitting data.

Extension Module is a module for connecting to the Universal Radio Socket additional components using the Antilatency Hardware Extension Interface. Using it, you can read the external triggers of buttons or connect additional circuits to the Socket.

Host is the root Node of the ADN device tree. Host unites all the connected devices in one system. It processes data received from the access point via USB.

Node is any of the ADN devices connected to the Host.

Socket – is a device with a connector for Alt that can send data received from Alt, for example, to an access point using Antilatency Radio Protocol.

Tag is a wireless lightweight Socket that can be attached to even a small object because of its small size. Tag has a rechargeable battery and is fully functional while charging.

1. Introduction

Universal Radio Socket is a lightweight and small Socket, that can act as an access point or as a client. It supports the Extension Module – a module that allows reading external triggers and controlling other devices.

Thanks to its small size, this lightweight Universal Radio Socket can be used to track objects instead of Tag if the tracked object has its own battery or an external battery can be fitted inside or outside the object's casing.

Set of Delivery:

- Universal Radio Socket – 1 pc.

Purpose of the document

The product operational manual includes general information intended to familiarize service personnel with the operating rules of the product "Universal Radio Socket" (hereinafter referred to as the product, device or Socket). The document contains technical specifications, a description of the design and principle of operation, as well as information necessary for the correct product operation.

Only qualified persons can configure, dismantle or repair this Device.

The manufacturer reserves the right to make non-fundamental changes that do not impair the technical specifications of the product. These changes may not be reflected in the text of this document.

2. Product Features and Specifications

Technical specifications

Parameter	Value
Connectivity	2.4 GHz Proprietary radio protocol (access point or client modes)
	USB 2.0 Full Speed
Ports	Usb Type-C port (for power and data transfer)
Battery	No built in battery. External power banks are supported
Antilatency Hardware Extension Interface support	Yes
Power supply voltage	USB 5 V
Current consumption	15 mA (without Alt)
	115 mA (with Alt)
Indication	RGB LED
Operating temperature	+5…+50°C
Humidity	<75% (at +25ºC)
Net weight	8 g
Overall dimensions (Width x Height x Depth)	9 x 18 x 52 mm

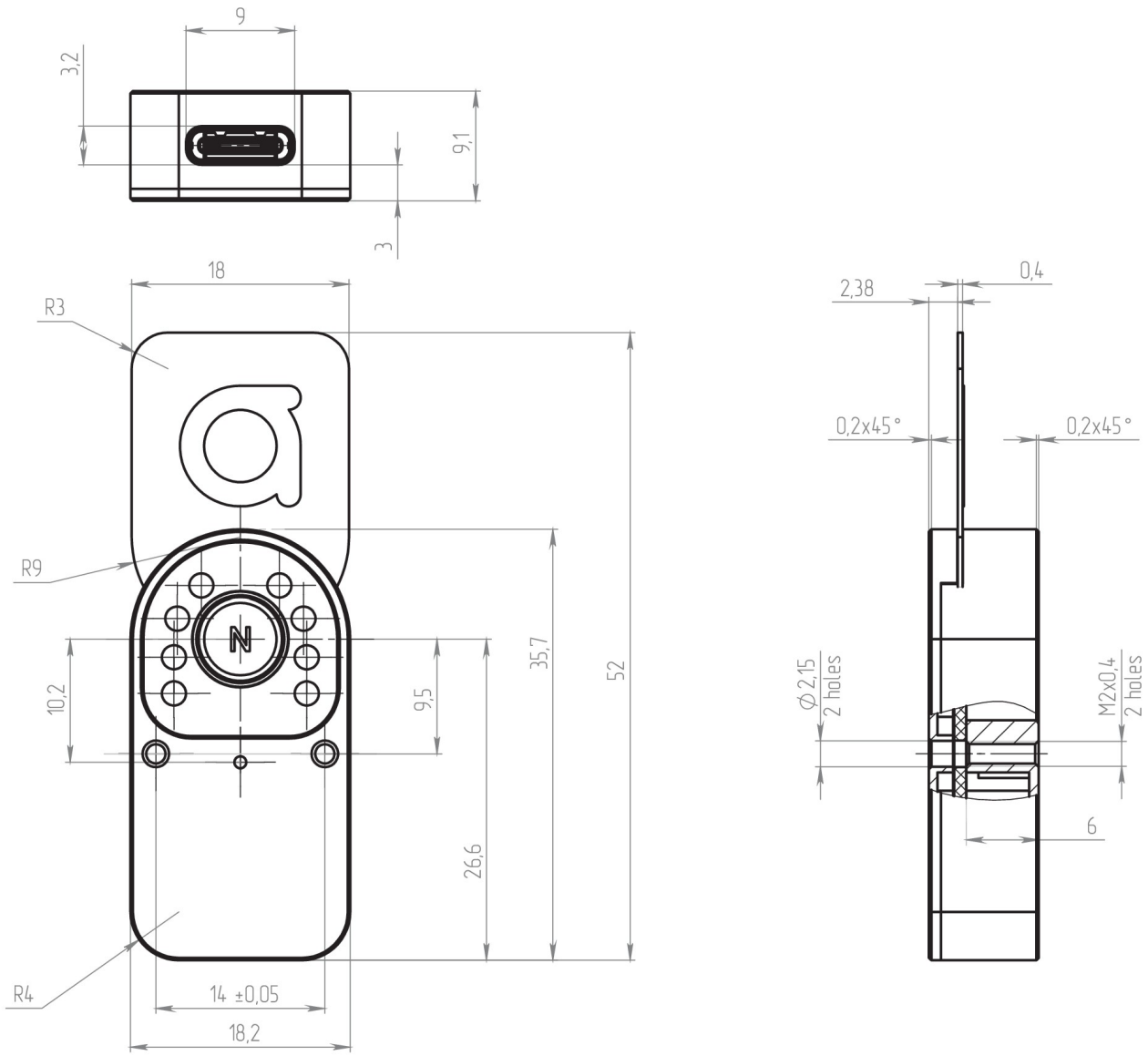

Fig. 1. Overall device dimensions

ATTENTION!

The operator is responsible for the correct installation, operation and maintenance of the product.

When moving the product from a cold to a warm room, it is recommended to unpack it and hold it for at least 12 hours before installation at an operating temperature of +5°C to +50°C and a humidity of no more than 75% (at +25°C).

3. Device design and principle of operation

3.1. Purpose of sockets

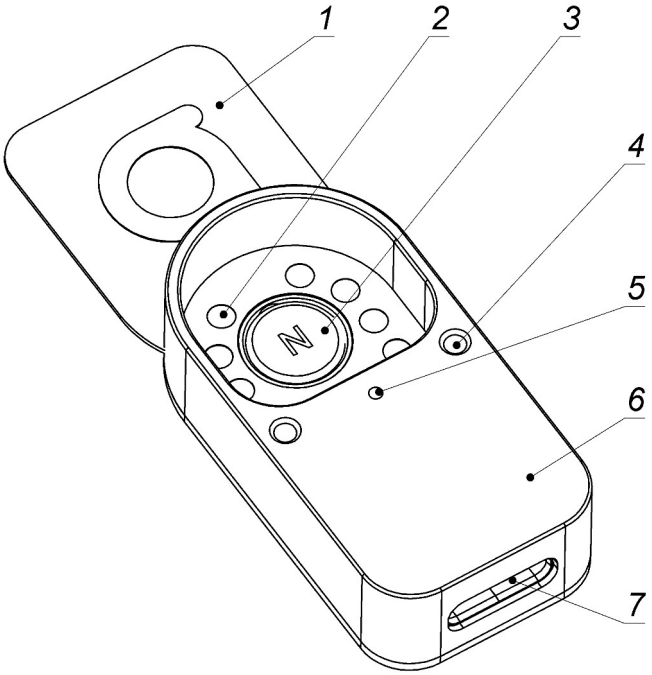

Fig. 2. Device layout (1 — antenna, 2 – contact pads, 3 – magnet, 4 — mounting holes, 5 — LED indicator, 6 – housing, 7 – USB type C connector)

3.2. Purpose of indication

Indicator state	Device state
	Radio is disabled. Connection limit is 0.
	Searching for a free radio channel or the radio channel is set to a specific value and this channel is occupied by another device.
	This device found a channel to work with and now waits for wireless sockets. Color is the channel identification, different channels will have different colors.
	This access point has at least one other client connected to it, the color will be identical on both devices.
	Device is in firmware update mode.
	Device error, it will be restarted in a few seconds.
	Hardware error, the number of red blinks is the error code.

3.3. External power source

You can power a Universal Radio Socket from an external power bank via a USB type-C port. In this case the Universal Radio Socket functions as a client.

3.4. Extension module support

Universal Radio Socket supports the Extension Module. The Extension Module connects to the Universal Radio Socket through a USB type-C port to transmit data about external triggers and response control (vibration, etc.). Universal Radio Socket sends this data, along with tracking data, to its access point.

3.5. Universal Radio Socket Operating Modes

Universal Radio Socket can act as a client (if connected to the external power supply), transmitting the tracking data to the access point, or as an access point, collecting data from other devices and sending them to the Host via USB (along with its own data).

Each mode defines the device properties in accordance with its functions.

You can change the Universal Radio Socket mode in the AntilatencyService using the Device Network tab.

To do this, set the Mode property as:

- UsbRadioSocket (access point);
- RadioSocket (client).

ATTENTION!
Firmware update is only available in UsbRadioSocket mode.

The device in each mode has an independent set of properties.

Since firmware version 5.0.0 the Universal Radio Socket in client mode appears in the ADN device tree as an additional node AltHmdRadioSocketShadow. But firstly, you need to connect the device via USB.

You can also configure its properties: set the channel mask, the MasterSN or change the Socket mode.

If you connect one Socket using both USB and radio connections, it will be displayed in the Device Tree twice under different names.

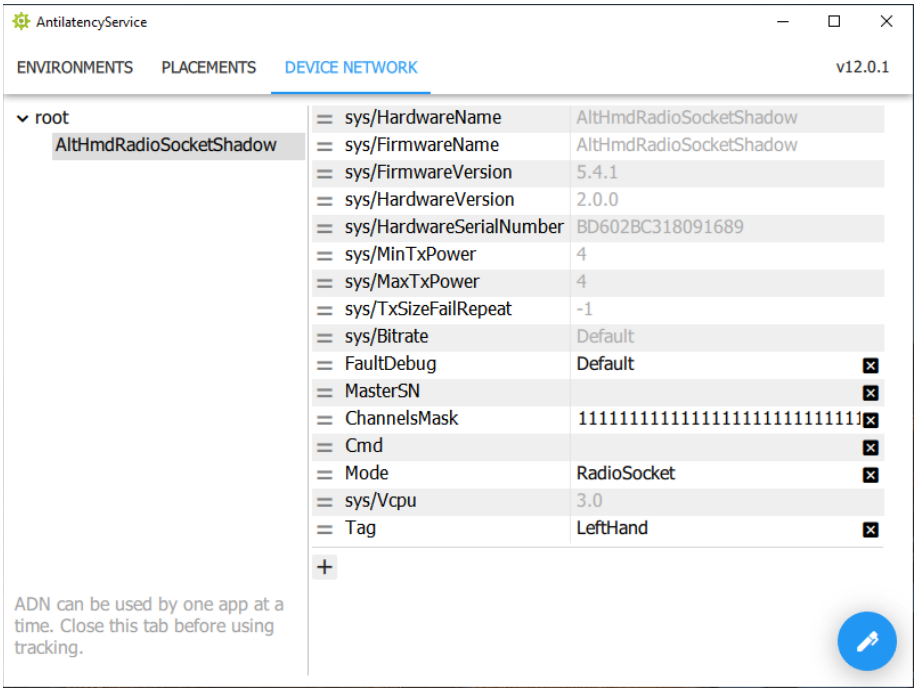

Fig. 3. Appearence of Universal Radio Socket as AltHmdRadioSocketShadow

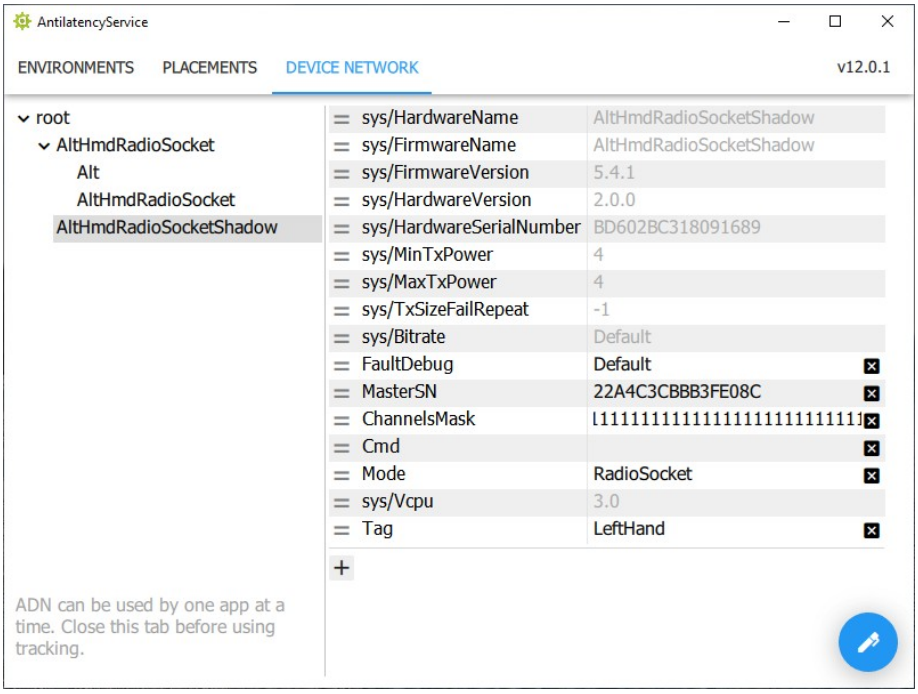

Fig. 4. Appearence of Universal Radio Socket as AltHmdRadioSocket and AltHmdRadioSocketShadow

4. Universal Radio Socket Configuration

Before configuration you have to learn about the available radio channels, restrictions, and recommendations in the Antilatency Radio Protocol (https://developers.antilatency.com/Terms/Antilatency_Radio_Protocol_en.html).

Universal Radio Socket supports two operation modes: as client and as access point.

4.1. Access point properties

RadioChannel sets the specific channel that will be used. With it, you can select a less noisy channel and assign different frequencies to different access points.

The default setting is -1. The access point will select the first available radio channel from those available by default (see Antilatency Radio Protocol).

ConnLimit sets the maximum number of clients that can connect to this access point. A value of 0 completely shuts down the radio connection on the device.

We highly recommend setting this value to exactly match the number of the client devices you will connect to the socket. The traffic is divided equally by the number specified in ConnLimit. Therefore if you connect fewer devices, some of the traffic will be allocated needlessly.

4.2. Client properties

ChannelsMask sets the channel mask for the client to search for an access point connection. ChannelMask is a 141-symbol string (corresponding to the number of available channels) consisting of 0's and 1's where 1 denotes that the respective channel will be used while searching for an access point, while 0 means that the channel will be ignored. The string is a bit mask: the channels are written in reverse sequence. The first symbol in the string is responsible for the last 140th channel, the last symbol in the string is responsible for the 0th channel.

The default channel mask looks like this:

00000000000000000000100000100000000000000000000000100000000000000000000000000100
00000000000000000000100000000000000000000000000000000000000000000

For your convenience, there are aliases that you can also use:

- full – all channels can be used for searching;
- default – only the five default channels can be used for searching;
- N – only one channel is used to search, use the number of the channel instead of N.

The fewer active channels in the mask, the faster the access point search is.

MasterSN ensures that the client only connects to the specified access point.

If the value of the MasterSN property is empty, client-devices will connect to the nearest access point. This is convenient for local tests or for using only one access point at a time. Otherwise, you should set the MasterSN for each client.

Learn more about Universal Radio Socket Configuration:
https://developers.antilatency.com/HowTo/ConfiguringRadioDevices_en.html

5. Universal Radio Socket Firmware Update

Device Network tab of AntilatencyService app is used to update firmware of Universal Radio Socket. First, connect Universal Radio Socket via USB to the Host. After that, you can access the device configuration via the ADN.

Open the AntilatencyService and go to the Device Network tab. Select your device in the Device Tree.

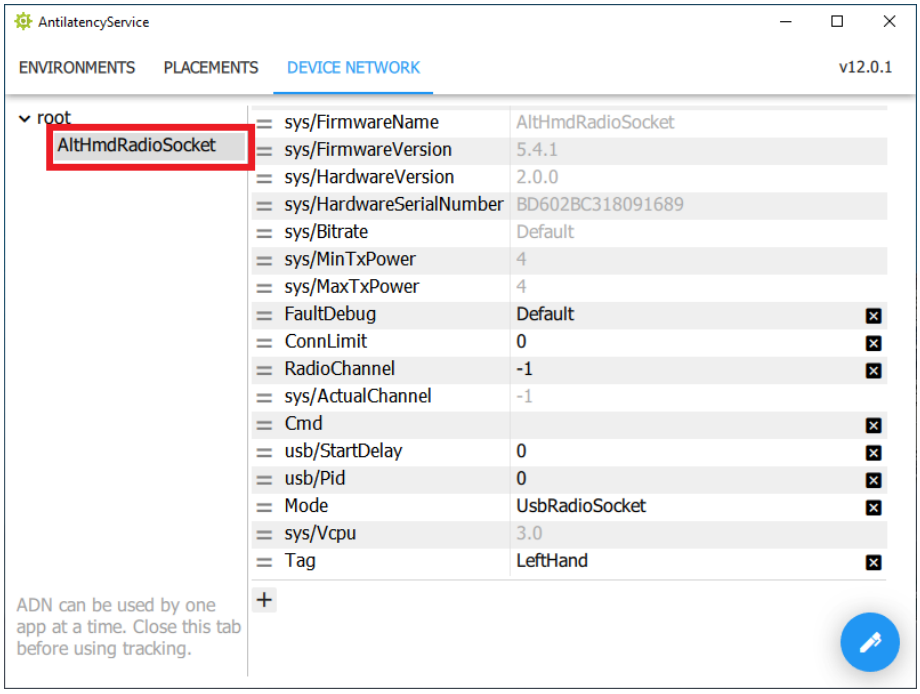

Fig. 5. Universal Radio Socket in the Device Tree

Click the icon in the lower right corner and select the Reflash firmware option.

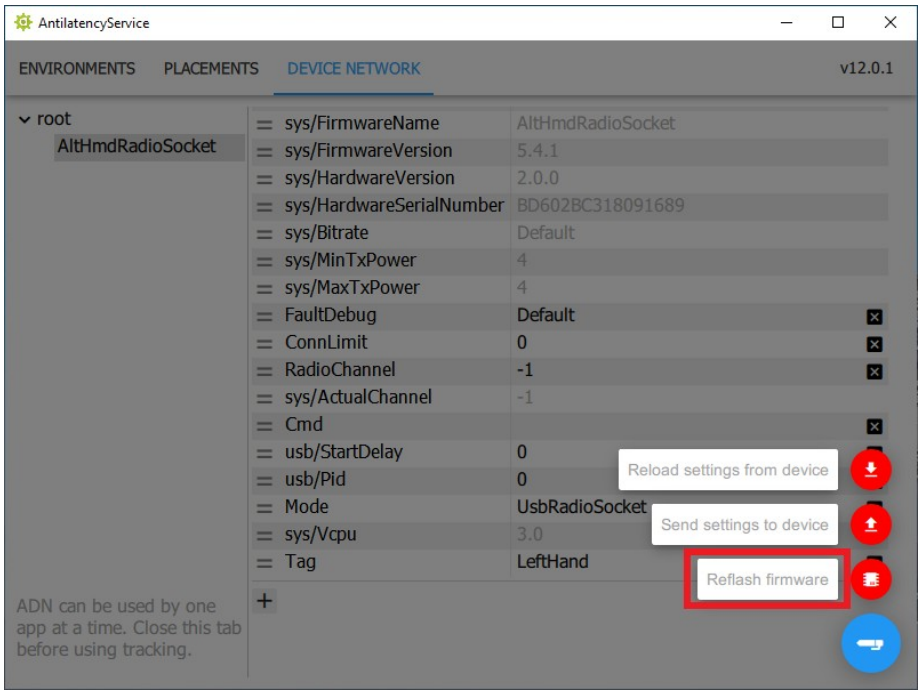

Fig. 6. Reflash firmware button

Here you see a list of firmware versions available for download. The current version will be marked with a red arrow.

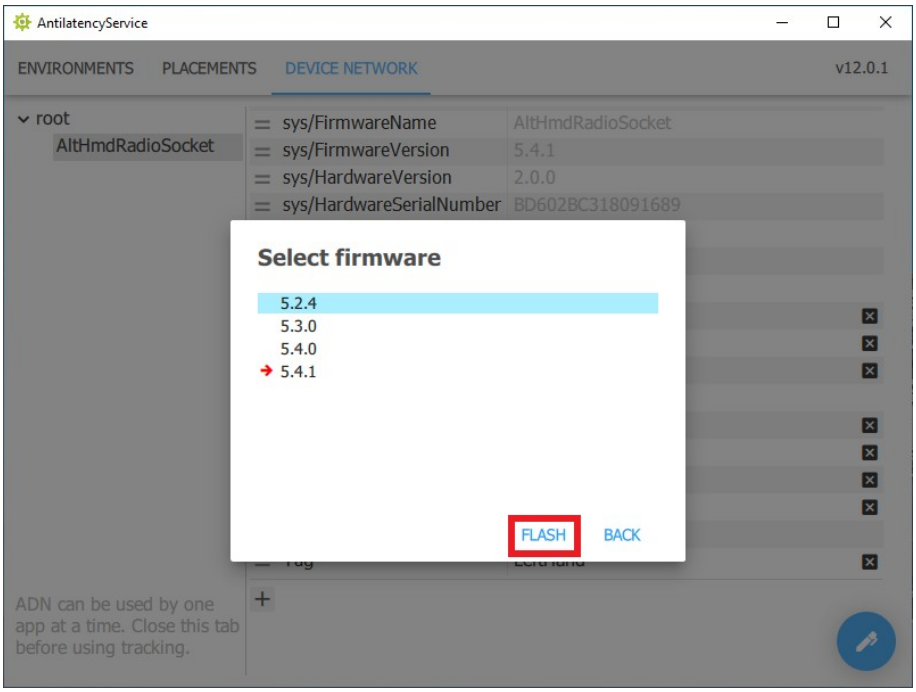

Fig. 7. Available firmware versions

Select the required firmware version and click Flash. Wait till the end of the installation.

ATTENTION!
Do not close the program or disconnect the device during the update!

Learn more about Universal Radio Socket Firmware Update: https://developers.antilatency.com/HowTo/Firmware_Update_en.html

6. Operational safety

Before mounting Universal Radio Socket, prepare a seat that protects the device from moisture and dirt. The moisture ingress on the connectors and on the product internal electrical elements is not allowed. It is prohibited to use the product in aggressive environments containing acids, alkalis, oils, corrosive and flammable gas, etc. in the atmosphere.

During operation and maintenance, the national electrical standard requirements must be observed.

7. Installation and operation

It's not recommended to carry out the device maintenance on its own. If necessary, contact the manufacturer's service department.

The place of the device installation must provide:

- ambient temperature from + 5°C to + 50°C, with humidity ≤75%;
- the dustiness is within the sanitary standard;

- sufficient ventilation;
- exclusion of the local heating impact, high frequency currents;
- exclusion of the concentration of flammable and explosive vapors and dust.

The service life, productivity and precision of a product depend on careful handling of equipment.

8. Marking, packaging, storage, transportation, disposal

8.1. Package marking

The package marking contains:
- manufacturer trademark (Antilatency);
- product name (Universal Radio Socket);
- model name (ACHA0Socket_RUA);
- product net and gross weight;
- date of manufacture;
- manipulation signs.

8.2. Packaging

The product is delivered to a customer fully assembled and ready to be used. The product is packed in a cardboard box.

When storing packed equipment, the following conditions must be observed:
- do not store in the open air;
- store in a dry and dust-free place;
- do not expose to aggressive environment;
- store at temperatures from -50°C to +40°C, at humidity <80%.

8.3. Product storage conditions

The unpacked product should be stored in heated and ventilated rooms with air conditioning at temperatures from + 5°C to +40°C and relative humidity <60% (at +20°C).

The room must be dry, free from condensation and dust. Indoor dustiness must be within the sanitary standard. The air of the storage room should not contain aggressive impurities (acid or alkalis vapors). Storage requirements apply to both supplier and customer warehouses.

8.4. Storage period

The product shelf life in consumer containers without re-preservation is at least 12 months.

During long-term storage, the product must be packaged and kept in heated storage at an ambient temperature from +10°C to +25°C and a relative humidity of no more than 60% (at +20°C).

8.5. Transportation conditions

It is allowed to transport the product in a shipping container by any transport types (including in heated sealed compartments of aircraft) without distance limitation. When transporting in railway wagons, the type of shipment is small low-tonnage. When transporting the product, protection against dust and atmospheric precipitation must be provided.

Transportation conditions

Parameter	Value
Temperature range	-50°C...+40°C
Relative humidity	<80% at +25°C
Atmosphere pressure	70...106.7 kPa

8.6. Preparation for transportation

The product must be secured to ensure a stable position, exclude mutual displacement and shock. When carrying out loading and unloading operations and transportation, the requirements of the handling signs, printed on the shipping container must be strictly observed.

8.7. Disposal of the product

The product is disposed by the method of its complete disassembly. The product contains substances that can be harmful to human health or the environment.

Disposal is carried out separately according to material groups: plastic elements, metal case, radio electronic components. Components that pose a danger to life, human health and the environment must be disposed of separately from general industrial waste.

The precious metals content in the product components is extremely small, so it is impractical to recycle them.

9. Warranty

Warranty service period is 12 months from purchase date. The warranty is valid only in case of observance of operational and preventive maintenance conditions.

1. General provisions

1.1. If Goods are purchased as components Seller guarantees operability of each component but is not responsible for quality of their joint operation (improper selection of components). If you have any questions, contact our technical specialists for technical assistance.

1.2. Seller is not guarantee compatibility of purchased Goods with Buyer components or Goods purchased from the third parties.

1.3. Article parameters and scope of delivery are subject to change by Manufacturer without notice due to constant technical improvement of products.

2. Warranty service acceptance criteria

2.1. Goods are accepted for Warranty service in the same configuration as they have been purchased.

3. Warranty service procedure

3.1. Warranty service is provided by testing (checking) of Goods declared defects.

3.2. Warranty repair is performed after defect confirmation.

4. Warranty does not cover consumables and also:

4.1. Goods with damages due to improper transportation and storage conditions, misconnection, off-design operation or conditions that are not specified by Manufacturer (including excess temperature and humidity), damages due other conditions (power supply voltage surges, natural disasters etc) and having mechanical and thermal damages.

4.2. Goods with effects of impact and/or entry of foreign matters, objects (including dust), liquids, insects and having foreign signs.

4.3. Goods with signs of unauthorized access and/or repair (signs of opening, crude soldering,

element replacement etc.) without the prior permission of ALT LLC.

4.4. Goods with self-diagnostics indicating improper operation conditions.

4.5. Technically complex Goods which erection, assembling and commissioning works are performed by other specialists but not specialists of Seller or companies recommended by Seller except cases directly specified by Goods documentation.

4.6. Goods that operation is performed under conditions when electric power supply does not correspond to Manufacturer requirements and in absence of equipment and network electric protection devices.

4.7. Goods with defects occurred as a result of use of poor quality or exhausted spare parts, consumables, accessories and in case of use of spare parts, consumables, accessories that are not recommended by Manufacturer.

It was manufactured and accepted in accordance with mandatory requirements of the applicable technical documentation and deemed ready for operations.

We draw your attention to the fact, that there can be some changes in this operation manual due to the product consistent technical improvement. You can always download our latest versions at developers.antilatency.com.

Edition 1 of 29.09.2021.

Contacts:
info@antilatency.com
https://antilatency.com/contact