FCC REPORT
(LTE)

Applicant:	Shenzhen Coosea Group Company Limited
Address of Applicant:	9-10th Floor, Tower 1, Foresea Life Center, Xingye Road, Bao'an District, Shenzhen City, Guangdong Province, China

Equipment Under Test (EUT)

Product Name:	ZEEKER T100
Model No.:	ZEEKER T100
Trade mark:	ZEEKER
FCC ID:	2A2GN-T100
Applicable standards:	FCC CFR Title 47 Part 2 FCC CFR Title 47 Part 22 Subpart H FCC CFR Title 47 Part 24 Subpart E FCC CFR Title 47 Part 27 Subpart L FCC CFR Title 47 Part 27 Subpart M FCC CFR Title 47 Part 27 Subpart H FCC CFR Title 47 Part 27 Subpart F FCC CFR Title 47 Part 90 Subpart S
Date of sample receipt:	23 Nov., 2021
Date of Test:	24 Nov., to 23 Dec., 2021
Date of report issued:	30 Dec., 2021
Test Result:	PASS*

*In the configuration tested, the EUT complied with the standards specified above.

Authorized Signature:

Bruce Zhang
Laboratory Manager

This report details the results of the testing carried out on one sample. The results contained in this test report do not relate to other samples of the same product and does not permit the use of the JYT product certification mark. The manufacturer should ensure that all products in series production are in conformity with the product sample detailed in this report.

This report may only be reproduced and distributed in full. If the product in this report is used in any configuration other than that detailed in the report, the manufacturer must ensure the new system complies with all relevant standards.

This document cannot be reproduced except in full, without prior written approval of the Company. Any unauthorized alteration, forgery or falsification of the content or appearance of this document is unlawful, and offenders may be prosecuted to the fullest extent of the law. Unless otherwise stated the results shown in this test report refer only to the sample(s) tested and such sample(s) are retained for 90 days only.

2. Version

Version No.	Date	Description
00	*30 Dec., 2021*	*Original*

Tested by: Janet Wei ***Date:*** *30 Dec., 2021*

Test Engineer

Reviewed by: Winner zhang ***Date:*** *30 Dec., 2021*

Project Engineer

3. Contents

Page

1. COVER PAGE **1**

2. VERSION **2**

3. CONTENTS **3**

4. TEST SUMMARY **4**

5. GENERAL INFORMATION **6**

5.1 CLIENT INFORMATION 6
5.2 GENERAL DESCRIPTION OF E.U.T 6
5.3 TEST ENVIRONMENT AND MODE, AND TEST SAMPLES PLANS 18
5.4 DESCRIPTION OF SUPPORT UNITS 18
5.5 MEASUREMENT UNCERTAINTY 18
5.6 RELATED SUBMITTAL(S) / GRANT (S) 18
5.7 ADDITIONS TO, DEVIATIONS, OR EXCLUSIONS FROM THE METHOD 18
5.8 LABORATORY FACILITY 18
5.9 LABORATORY LOCATION 19
5.10 TEST INSTRUMENTS LIST 19

6. TEST RESULTS **20**

6.1 CONDUCTED OUTPUT POWER, ERP AND EIRP 20
6.2 PEAK-TO-AVERAGE RATIO 21
6.3 OCCUPY BANDWIDTH 22
6.4 OUT OF BAND EMISSION AT ANTENNA TERMINALS 23
6.5 FIELD STRENGTH OF SPURIOUS RADIATION MEASUREMENT 25
6.6 FREQUENCY STABILITY V.S. TEMPERATURE MEASUREMENT 53
6.7 FREQUENCY STABILITY V.S. VOLTAGE MEASUREMENT 54

7 TEST SETUP PHOTO **55**

8 EUT CONSTRUCTIONAL DETAILS **57**

4. Test Summary

Test Items	Section in CFR 47	Result
RF Exposure (SAR)	Part 1.1307 Part 2.1093	Passed (Please refer to SAR Report)
RF Output Power	Part 2.1046 Part 22.913 (a)(5) Part 24.232 (c) Part 27.50 (c)(10) Part 27.50 (d)(4) Part 27.50 (h)(2) Part 27.50 (b)(10) Part 90.635(b)	Appendix A – LTE
Peak-to-Average Ratio	Part 24.232 (d) Part 22.913 (d) Part 27.50(d)(5)	Appendix B – LTE
Modulation Characteristics	Part 2.1047	Pass
99% & -26 dB Occupied Bandwidth	Part 2.1049 Part 22.917(b) Part 24.238(b) Part 27.53(g) Part 27.53(h) Part 27.53(m) Part 90.691(a)	Appendix C – LTE
Out of band emission at antenna terminals	Part 2.1053 Part 22.917(a) Part 24.238 (a) Part 27.53 (g) Part 27.53 (h) Part 27.53(m) Part 27.53(c) Part 90.691(a)	Appendix D – LTE Appendix E – LTE
Field strength of spurious radiation	Part 22.917(a) Part 24.238 (a) Part 27.53 (g) Part 27.53 (h) Part 27.53(m) Part 27.53(c) Part 90.691(a)	Pass
Frequency stability vs. temperature	Part 22.355 Part 24.235 Part 27.54 Part 90.213(a) Part 2.1055(a)(1)(b)	Appendix F – LTE
Frequency stability vs. voltage	Part 22.355 Part 24.235 Part 27.54 Part 90.213(a) Part 2.1055(d)(2)	Appendix F – LTE

Remark: *1. Pass: The EUT complies with the essential requirements in the standard.* *2. The cable insertion loss used by "RF Output Power" and other conduction measurement items is 0.5dB(Fundamental Frequency below 1GHz)/1.0dB(Fundamental Frequency above 1GHz) (provided by the customer).*	
Test Method:	*ANSI/TIA-603-E-2016* *ANSI C63.26-2015*

5. General Information

5.1 Client Information

Applicant:	Shenzhen Coosea Group Company Limited
Address:	9-10th Floor, Tower 1, Foresea Life Center, Xingye Road, Bao'an District, Shenzhen City, Guangdong Province, China
Manufacturer/ Factory:	Sichuan Koobee Communication Equipment Co., Ltd.
Address:	3 Floor, Building 2, 69 Gangyuan Road West Section, Lingang Development Zone, Yibin City, Sichuan Province, China

5.2 General Description of E.U.T.

Product Name:	ZEEKER T100		
Model No.:	ZEEKER T100		
Operation Frequency range:	LTE Band 2: TX: 1850MHz-1910MHz RX: 1930MHz-1990MHz LTE Band 4: TX: 1710MHz-1755MHz RX: 2110MHz-2155MHz LTE Band 5: TX: 824MHz-849MHz RX: 869MHz-894MHz LTE Band 7: TX: 2500MHz-2570MHz RX: 2620MHz-2690MHz LTE Band 12: TX: 699MHz-716MHz RX: 729MHz-746MHz LTE Band 13: TX: 777MHz-787MHz RX: 746MHz-756MHz LTE Band 17: TX: 704MHz-716MHz RX: 734MHz-746MHz LTE Band 25: TX: 1850 MHz-1915 MHz RX: 1930 MHz-1995 MHz LTE Band 26: TX: 814MHz-849MHz RX: 859MHz-894MHz LTE Band 38: TX: 2570MHz-2620MHz RX: 2570MHz-2620MHz LTE Band 41: TX: 2535MHz-2655MHz RX: 2535MHz-2655MHz LTE Band 66: TX: 1710MHz-1780MHz RX: 2110MHz-2200MHz		
Modulation type:	☒QPSK	☒16QAM	☒64QAM
Antenna type:	Internal Antenna		
Antenna gain:	LTE Band 2: 0.3 dBi(declare by Applicant) LTE Band 4: 0.6 dBi(declare by Applicant) LTE Band 5: -3.7 dBi(declare by Applicant) LTE Band 7: 0.6 dBi(declare by Applicant) LTE Band 12: -4.3 dBi(declare by Applicant) LTE Band 13: -3.9 dBi(declare by Applicant) LTE Band 17: -4.3 dBi(declare by Applicant) LTE Band 25: -3.7 dBi(declare by Applicant) LTE Band 26: -3.9 dBi(declare by Applicant) LTE Band 38: 0.6 dBi(declare by Applicant) LTE Band 41: 0.6 dBi(declare by Applicant) LTE Band 66: 0.6 dBi(declare by Applicant)		
Power supply:	Rechargeable Li-ion Polymer Battery DC3.85V, 5900mAh		
AC adapter:	Model: UF22P03 Input: AC100-240V, 50/60Hz, 0.5A Output: DC 5.0V, 3.0A or DC 9.0V, 2.0A or DC 12.0V, 1.5A		
Test Sample Condition:	The applicant provided engineering samples for staying in continuously transmitting for testing.		

Operation Frequency List:

LTE Band 2 (1.4MHz)		LTE Band 2 (3MHz)	
Channel	Frequency (MHz)	Channel	Frequency (MHz)
18607	1850.70	18615	1851.50
18608	1850.80	18616	1851.60
….	….	….	….
18899	1879.90	18899	1879.90
18900	1880.00	18900	1880.00
18901	1880.10	18901	1880.10
…	…	…	…
19193	1909.20	19185	1908.40
19194	1909.30	19186	1908.50
LTE Band 2 (5MHz)		LTE Band 2 (10MHz)	
Channel	Frequency (MHz)	Channel	Frequency (MHz)
18625	1852.50	18650	1855.00
18626	1852.60	18651	1855.10
….	….	….	….
18899	1879.90	18899	1879.90
18900	1880.00	18900	1880.00
18901	1880.10	18901	1880.10
…	…	…	…
19175	1907.40	19150	1904.90
19176	1907.50	19151	1905.00
LTE Band 2 (15MHz)		LTE Band 2 (20MHz)	
Channel	Frequency (MHz)	Channel	Frequency (MHz)
18675	1857.50	18700	1860.00
18676	1857.60	18701	1860.10
….	….	….	….
18899	1879.90	18899	1879.90
18900	1880.00	18900	1880.00
18901	1880.10	18901	1880.10
…	…	…	…
19125	1902.40	19100	1899.90
19126	1902.50	19101	1900.00

LTE Band 4 (1.4MHz)		LTE Band 4 (3MHz)	
Channel	Frequency (MHz)	Channel	Frequency (MHz)
19957	1710.70	19965	1711.50
19958	1710.80	19966	1711.60
….	….	….	….
20174	1732.40	20174	1732.40
20175	1732.50	20175	1732.50
20176	1732.60	20176	1732.60
…	…	…	…
20392	1754.20	20384	1753.40
20393	1754.30	20385	1753.50
LTE Band 4 (5MHz)		LTE Band 4 (10MHz)	
Channel	Frequency (MHz)	Channel	Frequency (MHz)
19975	1712.50	20000	1715.00
19976	1712.60	20001	1715.10
….	….	….	….
20174	1732.40	20174	1732.40
20175	1732.50	20175	1732.50
20176	1732.60	20176	1732.60
…	…	…	…
20374	1752.40	20349	1749.90
20375	1752.50	20350	1750.00
LTE Band 4 (15MHz)		LTE Band 4 (20MHz)	
Channel	Frequency (MHz)	Channel	Frequency (MHz)
20025	1717.50	20050	1720.00
20026	1717.60	20051	1720.10
….	….	….	….
20174	1732.40	20174	1732.40
20175	1732.50	20175	1732.50
20176	1732.60	20176	1732.60
…	…	…	…
20324	1747.40	20299	1744.90
20325	1747.50	20300	1745.00

LTE Band 5 (1.4MHz)		LTE Band 5 (3MHz)	
Channel	Frequency (MHz)	Channel	Frequency (MHz)
20407	824.70	20415	825.50
20408	824.80	20416	825.60
….	….	….	….
20524	836.40	20524	836.40
20525	836.50	20525	836.50
20526	836.60	20526	836.60
…	…	…	…
20642	848.20	20634	847.40
20643	848.30	20635	847.50
LTE Band 5 (5MHz)		LTE Band 5 (10MHz)	
Channel	Frequency (MHz)	Channel	Frequency (MHz)
20425	826.50	20450	829.00
20426	826.60	20451	829.10
….	….	….	….
20524	836.40	20524	836.40
20525	836.50	20525	836.50
20526	836.60	20526	836.60
…	…	…	…
20624	846.40	20599	839.90
20625	846.50	20600	844.00

LTE Band 7 (5MHz)		LTE Band 7 (10MHz)	
Channel	Frequency (MHz)	Channel	Frequency (MHz)
20775	2502.50	20800	2505.00
20776	2502.60	20801	2502.10
….	….	….	….
21099	2534.90	21099	2534.90
21100	2535.00	21100	2535.00
21101	2535.20	21101	2535.20
…	…	…	…
21424	2567.40	21399	2564.90
21425	2567.50	21400	2565.00
LTE Band 7 (15MHz)		LTE Band 7 (20MHz)	
Channel	Frequency (MHz)	Channel	Frequency (MHz)
20825	2507.50	20850	2510.00
20826	2507.60	20851	2510.10
….	….	….	….
21099	2534.90	21099	2534.90
21100	2535.00	21100	2535.00
21101	2535.20	21101	2535.20
…	…	…	…
21374	2562.40	21349	2559.90
21375	2562.50	21350	2560.00

LTE Band 12 (1.4MHz)		LTE Band 12 (3MHz)	
Channel	Frequency (MHz)	Channel	Frequency (MHz)
23017	699.70	23025	700.50
23756	699.80	23026	700.60
….	….	….	….
23094	707.40	23094	707.40
23095	707.50	23095	707.50
23096	707.60	23096	707.60
…	…	…	…
23172	715.20	23164	714.40
23173	715.30	23165	714.50
LTE Band 12 (5MHz)		LTE Band 12 (10MHz)	
Channel	Frequency (MHz)	Channel	Frequency (MHz)
23035	701.50	23060	704.00
23036	701.60	23061	704.10
….	….	….	….
23094	707.40	23094	707.40
23095	707.50	23095	707.50
23096	707.60	23096	707.60
…	…	…	…
23154	713.40	23129	710.90
23155	713.50	23130	711.00

LTE Band 13 (5MHz)		LTE Band 13 (10MHz)	
Channel	Frequency (MHz)	Channel	Frequency (MHz)
23205	779.50	/	/
23206	779.60	/	/
….	….	/	/
23229	781.90	/	/
23230	782.00	23230	782.00
23231	782.10	/	/
…	…	/	/
23255	784.50	/	/
23256	784.60	/	/

LTE Band 17 (5MHz)		LTE Band 17 (10MHz)	
Channel	Frequency (MHz)	Channel	Frequency (MHz)
23755	706.50	23780	709.00
23756	706.60	23781	709.10
….	….	….	….
23789	709.90	23789	709.90
23790	710.00	23790	710.00
23791	710.10	23791	710.10
…	…	…	…
23824	713.40	23799	710.90
23825	713.50	23800	711.00

LTE Band 25 (1.4MHz)		LTE Band 25 (3MHz)	
Channel	Frequency (MHz)	Channel	Frequency (MHz)
26047	1850.70	26055	1851.50
26048	1850.80	26056	1851.60
….	….	….	….
26364	1882.40	26367	1882.40
26365	1882.50	26365	1882.50
26366	1882.60	26366	1882.60
…	…	…	…
26682	1914.20	26676	1913.40
26683	1914.30	26675	1913.50
LTE Band 25 (5MHz)		LTE Band 25 (10MHz)	
Channel	Frequency (MHz)	Channel	Frequency (MHz)
26065	1852.50	26090	1855.00
26066	1852.60	26091	1855.10
….	….	….	….
26364	1882.40	26364	1882.40
26365	1882.50	26365	1882.50
26366	1882.60	26366	1882.60
…	…	…	…
26664	1912.40	26639	1909.90
26665	1912.50	26640	1910.00
LTE Band 25 (15MHz)		LTE Band 25 (20MHz)	
Channel	Frequency (MHz)	Channel	Frequency (MHz)
26115	1857.50	26140	1860.00
26116	1857.60	26139	1860.10
….	….	….	….
26364	1882.40	26364	1882.40
26365	1882.50	26365	1882.50
36366	1882.60	26366	1882.60
…	…	…	…
26614	1907.40	26589	1904.90
26615	1907.50	26590	1905.00

LTE Band 26 (1.4MHz)		LTE Band 26 (3MHz)	
Channel	Frequency (MHz)	Channel	Frequency (MHz)
26697	814.70	26705	815.50
26698	814.80	26706	815.60
….	….	….	….
26864	831.40	26864	831.40
26865	831.50	26865	831.50
26866	831.60	26866	831.60
…	…	…	…
27032	848.20	27024	847.40
27033	848.30	27025	847.50
LTE Band 26 (5MHz)		LTE Band 26 (10MHz)	
Channel	Frequency (MHz)	Channel	Frequency (MHz)
26715	816.50	26750	820.00
26716	816.60	26760	820.10
….	….	….	….
26864	831.40	26864	831.40
26865	831.50	26865	831.50
26866	831.60	26866	831.60
…	…	…	…
27014	846.40	26980	843.90
27015	846.50	26990	844.00
LTE Band 26 (15MHz)			
Channel	Frequency (MHz)		
26775	822.50		
26776	822.60		
….	….		
26864	831.40		
26865	831.50		
26866	831.60		
…	…		
26964	841.40		
26965	841.50		

LTE Band 38 (5MHz)		LTE Band 38 (10MHz)	
Channel	Frequency (MHz)	Channel	Frequency (MHz)
Channel	Frequency (MHz)	37800	2575.00
37775	2572.50	37801	2575.10
37776	2572.60	….	….
….	….	37999	2594.90
37999	2594.90	38000	2595.00
38000	2595.00	38001	2595.10
38001	2595.10	…	…
…	…	38199	2614.90
38224	2617.50	38200	2615.00
LTE Band 38 (15MHz)		LTE Band 38 (20MHz)	
Channel	Frequency (MHz)	Channel	Frequency (MHz)
37825	2577.50	37850	2580.00
37826	2577.60	37851	2580.10
….	….	….	….
37999	2594.90	37999	2594.90
38000	2595.00	38000	2595.00
38001	2595.10	38001	2595.10
…	…	…	…
38174	2612.40	38149	2609.90
38175	2612.50	38150	2610.00

LTE Band 41 (5MHz)		LTE Band 41 (10MHz)	
Channel	Frequency (MHz)	Channel	Frequency (MHz)
40065	2537.50	40090	2540.00
40066	2537.60	40091	2540.10
….	….	….	….
40639	2594.90	40639	2594.90
40640	2595.00	40640	2595.00
40641	2595.10	40641	2595.10
…	…	…	…
41214	2652.40	41189	2649.90
41215	2652.50	41190	2650.00
LTE Band 41 (15MHz)		LTE Band 41 (20MHz)	
Channel	Frequency (MHz)	Channel	Frequency (MHz)
40115	2542.50	40140	2545.00
40116	2542.60	40141	2545.10
….	….	….	….
40639	2594.90	40639	2594.90
40640	2595.00	40640	2595.00
40641	2595.10	40641	2595.10
…	…	…	…
41164	2647.40	41139	2644.90
41165	2647.50	41140	2645.00

LTE Band 66 (1.4MHz)		LTE Band 66 (3MHz)	
Channel	Frequency (MHz)	Channel	Frequency (MHz)
131979	1710.70	131987	1711.50
131980	1710.80	131988	1711.60
….	….	….	….
132321	1744.90	132321	1744.90
132322	1745.00	132322	1745.00
132323	1745.10	132323	1745.10
…	…	…	…
132664	1779.20	132656	1778.40
132665	1779.30	132657	1778.50
LTE Band 66 (5MHz)		LTE Band 66 (10MHz)	
Channel	Frequency (MHz)	Channel	Frequency (MHz)
131997	1712.50	132022	1715.00
131998	1712.60	132023	1715.10
….	….	….	….
132321	1744.90	132321	1744.90
132322	1745.00	132322	1745.00
132323	1745.10	132323	1745.10
…	…	…	…
136246	1777.40	132621	1774.90
136247	1777.50	132622	1775.00
LTE Band 66 (15MHz)		LTE Band 66 (20MHz)	
Channel	Frequency (MHz)	Channel	Frequency (MHz)
132047	1717.50	132072	1720.00
132048	1717.60	132073	1720.10
….	….	….	….
132321	1744.90	132321	1744.90
132322	1745.00	132322	1745.00
132323	1745.10	132323	1745.10
…	…	…	…
132596	1772.40	132571	1769.90
132597	1772.50	132572	1770.00

Regards to the operating frequency range, the lowest frequency, the middle frequency, and the highest frequency of channel were selected to perform the test, and the selected channels as below:

LTE Band 7 (5MHz)			LTE Band 7 (10MHz)		
Channel		Frequency (MHz)	Channel		Frequency (MHz)
Lowest channel	20775	2502.50	Lowest channel	20800	2505.00
Middle channel	21100	2535.00	Middle channel	21100	2535.00
Highest channel	21425	2567.50	Highest channel	21400	2565.00
LTE Band 7 (15MHz)			LTE Band 7 (20MHz)		
Channel		Frequency (MHz)	Channel		Frequency (MHz)
Lowest channel	20825	2507.50	Lowest channel	20850	2510.00
Middle channel	21100	2535.00	Middle channel	21100	2535.00
Highest channel	21375	2562.50	Highest channel	21350	2560.00

LTE Band 12(1.4MHz)			LTE Band 12(3MHz)		
Channel		Frequency (MHz)	Channel		Frequency (MHz)
Lowest channel	23017	699.70	Lowest channel	23025	700.50
Middle channel	23095	707.50	Middle channel	23095	707.50
Highest channel	23173	715.30	Highest channel	23165	714.50
LTE Band 12(5MHz)			LTE Band 12(10MHz)		
Channel		Frequency (MHz)	Channel		Frequency (MHz)
Lowest channel	23035	701.50	Lowest channel	23060	704.00
Middle channel	23095	707.50	Middle channel	23095	707.50
Highest channel	23155	713.50	Highest channel	23130	711.00

LTE Band 13(5MHz)			LTE Band 13(10MHz)		
Channel		Frequency (MHz)	Channel		Frequency (MHz)
Lowest channel	23205	779.5	Lowest channel	/	/
Middle channel	23230	782.0	Middle channel	23230	782.00
Highest channel	23255	784.5	Highest channel	/	/

LTE Band 17(5MHz)			LTE Band 17(10MHz)		
Channel		Frequency (MHz)	Channel		Frequency (MHz)
Lowest channel	23755	706.50	Lowest channel	23780	709.00
Middle channel	23790	710.00	Middle channel	23790	710.00
Highest channel	23825	713.50	Highest channel	23800	711.00

LTE Band 25 includes LTE Band 2:

LTE Band 25 (1.4MHz)			LTE Band 25 (3MHz)		
Channel:		Frequency (MHz)	Channel		Frequency (MHz)
Lowest channel	26047	1850.70	Lowest channel	26055	1851.50
Middle channel	26365	1882.50	Middle channel	26365	1882.50
Highest channel	26683	1914.30	Highest channel	26675	1913.50
LTE Band 25 (5MHz)			LTE Band 25 (10MHz)		
Channel		Frequency (MHz)	Channel		Frequency (MHz)
Lowest channel	26065	1852.50	Lowest channel	26090	1855.00
Middle channel	26365	1882.50	Middle channel	26365	1882.50
Highest channel	26665	1912.50	Highest channel	26640	1910.00
LTE Band 25 (15MHz)			LTE Band 25 (20MHz)		
Channel		Frequency (MHz)	Channel		Frequency (MHz)
Lowest channel	26115	1857.50	Lowest channel	26140	1860.00
Middle channel	26365	1882.50	Middle channel	26365	1882.50
Highest channel	26615	1907.50	Highest channel	26590	1905.00

LTE Band 26(Part 22) includes LTE Band 5:

LTE Band 5&26(1.4MHz) for Part 22			LTE Band 26(1.4MHz) for Part 90		
Channel		Frequency (MHz)	Channel		Frequency (MHz)
Lowest channel	26797	824.7	Lowest channel	26697	814.7
Middle channel	26915	836.5	Middle channel	26740	819.0
Highest channel	27033	848.3	Highest channel	26783	823.3
LTE Band 5&26(3MHz) for Part 22			LTE Band 26(3MHz) for Part 90		
Channel		Frequency (MHz)	Channel		Frequency (MHz)
Lowest channel	26805	825.5	Lowest channel	26705	815.5
Middle channel	26915	836.5	Middle channel	26740	819.0
Highest channel	27025	847.5	Highest channel	26775	822.5
LTE Band 5&26(5MHz) for Part 22			LTE Band 26(5MHz) for Part 90		
Channel		Frequency (MHz)	Channel		Frequency (MHz)
Lowest channel	26815	826.5	Lowest channel	26715	816.5
Middle channel	26915	836.5	Middle channel	26740	819.0
Highest channel	27015	846.5	Highest channel	26765	821.5
LTE Band 5&26(10MHz) for Part 22			LTE Band 26(10MHz) for Part 90		
Channel		Frequency (MHz)	Channel		Frequency (MHz)
Lowest channel	26840	829.0	Lowest channel	/	/
Middle channel	26915	836.5	Middle channel	26740	819.0
Highest channel	26990	844.0	Highest channel	/	/
LTE Band 26(15MHz) for Part 22H			LTE Band 26(15MHz) (Straddling Part 22H, 90S)		
Channel		Frequency (MHz)	Channel		Frequency (MHz)
Lowest channel	26865	831.5	Lowest channel	26765	821.5
Middle Channel	26915	836.5	/	/	/
Highest channel	26965	841.5	/	/	/

LTE Band 38:

LTE Band 38 (5MHz)			LTE Band 38 (10MHz)		
Channel		Frequency (MHz)	Channel		Frequency (MHz)
Lowest channel	37775	2572.50	Lowest channel	37800	2575.00
Middle channel	38000	2595.00	Middle channel	38000	2595.00
Highest channel	38225	2617.50	Highest channel	38200	2615.00
LTE Band 38 (15MHz)			LTE Band 38 (20MHz)		
Channel		Frequency (MHz)	Channel		Frequency (MHz)
Lowest channel	37825	2577.50	Lowest channel	37850	2580.00
Middle channel	38000	2595.00	Middle channel	38000	2595.00
Highest channel	38175	2612.50	Highest channel	38150	2610.00

LTE Band 41:

LTE Band 41 (5MHz)			LTE Band 41 (10MHz)		
Channel		Frequency (MHz)	Channel		Frequency (MHz)
Lowest channel	40065	2537.50	Lowest channel	40090	2540.00
Middle channel	40640	2595.00	Middle channel	40640	2595.00
Highest channel	41215	2652.50	Highest channel	41190	2650.00
LTE Band 41 (15MHz)			LTE Band 41 (20MHz)		
Channel		Frequency (MHz)	Channel		Frequency (MHz)
Lowest channel	40115	2542.50	Lowest channel	40140	2545.00
Middle channel	40640	2595.00	Middle channel	40640	2595.00
Highest channel	41165	2647.50	Highest channel	41140	2645.00

LTE Band 66 includes LTE Band 4:

LTE Band 66 (1.4MHz)			LTE Band 66 (3MHz)		
Channel		Frequency (MHz)	Channel		Frequency (MHz)
Lowest channel	131979	1710.7	Lowest channel	131987	1711.5
Middle channel	132322	1745.0	Middle channel	132322	1745.0
Highest channel	132665	1779.3	Highest channel	132657	1778.5
LTE Band 66 (5MHz)			LTE Band 66 (10MHz)		
Channel		Frequency (MHz)	Channel		Frequency (MHz)
Lowest channel	131997	1712.5	Lowest channel	132022	1715.0
Middle channel	132322	1745.5	Middle channel	132322	1745.0
Highest channel	132647	1777.5	Highest channel	132622	1775.0
LTE Band 66 (15MHz)			LTE Band 66 (20MHz)		
Channel		Frequency (MHz)	Channel		Frequency (MHz)
Lowest channel	132047	1717.5	Lowest channel	132072	1720.0
Middle channel	132322	1745.0	Middle channel	132322	1745.0
Highest channel	132597	1772.5	Highest channel	132572	1770.0

5.3 Test environment and mode, and test samples plans

Operating Environment:	
Temperature:	Normal: 15℃ ~ 35℃, Extreme: -30℃ ~ +50℃
Humidity:	20 % ~ 75 % RH
Atmospheric Pressure:	1008 mbar
Voltage:	Nominal: 3.85Vdc, Extreme: Low 3.5Vdc, High 4.40Vdc
Test mode:	
LTE QPSK mode	Keep the EUT communication with simulated station in QPSK mode
LTE 16-QAM mode	Keep the EUT communication with simulated station in 16-QAM mode
Remark: The EUT has been tested under continuous transmitting mode. Channel Low, Mid and High for each type band with rated data rate were chosen for full testing. The field strength of spurious radiation emission was measured as EUT stand-up position (H mode) and lie down position (E1, E2 mode) for these modes. Just the worst case position (H mode) shown in report.	

5.4 Description of Support Units

Test Equipment	Manufacturer	Model No.	Serial No.
Simulated Station	Anritsu	MT8820C	6201026545

5.5 Measurement Uncertainty

Parameter	Expanded Uncertainty (Confidence of 95%)
Radiated Emission (9kHz ~ 30MHz electric field) for 3m SAC	3.13 dB
Radiated Emission (9kHz ~ 30MHz magnetic field) for 3m SAC	3.13 dB
Radiated Emission (30MHz ~ 1GHz) for 3m SAC	4.45 dB
Radiated Emission (1GHz ~ 18GHz) for 3m SAC	5.34 dB
Radiated Emission (18GHz ~ 40GHz) for 3m SAC	5.34 dB

5.6 Related Submittal(s) / Grant (s)

This is an original grant, no related submittals and grants.

5.7 Additions to, deviations, or exclusions from the method

No

5.8 Laboratory Facility

The test facility is recognized, certified, or accredited by the following organizations:

- **FCC - Designation No.: CN1211**

JianYan Testing Group Shenzhen Co., Ltd. has been accredited as a testing laboratory by FCC(Federal Communications Commission). The test firm Registration No. is 727551.

- **ISED – CAB identifier.: CN0021**

The 3m Semi-anechoic chamber and 10m Semi-anechoic chamber of JianYan Testing Group Shenzhen Co., Ltd. has been Registered by Certification and Engineering Bureau of Industry Canada for radio equipment testing with Registration No.: 10106A-1.

- **CNAS - Registration No.: CNAS L15527**

JianYan Testing Group Shenzhen Co., Ltd. is accredited to ISO/IEC 17025:2017 General Requirements for the Competence of Testing and Calibration laboratories for the competence of testing. The Registration No. is CNAS L15527.

- **A2LA - Registration No.: 4346.01**

This laboratory is accredited in accordance with the recognized International Standard ISO/IEC 17025:2017 General requirements for the competence of testing and calibration laboratories. The test scope can be found as below link: https://portal.a2la.org/scopepdf/4346-01.pdf

5.9 Laboratory Location

JianYan Testing Group Shenzhen Co., Ltd.
Address: No.101, Building 8, Innovation Wisdom Port, No.155 Hongtian Road, Huangpu Community, Xinqiao Street, Bao'an District, Shenzhen, Guangdong, People's Republic of China.
Tel: +86-755-23118282, Fax: +86-755-23116366
Email: info-JYTee@lets.com, Website: http://www.ccis-cb.com

5.10 Test Instruments list

Radiated Emission:					
Test Equipment	**Manufacturer**	**Model No.**	**Serial No.**	**Cal. Date (mm-dd-yy)**	**Cal. Due date (mm-dd-yy)**
3m SAC	ETS	RFD-100	Q1984	04-14-2021	04-13-2024
Loop Antenna	SCHWARZBECK	FMZB 1519 B	1519B-044	03-07-2021	03-06-2022
BiConiLog Antenna	SCHWARZBECK	VULB9163	9163-1246	03-07-2021	03-06-2022
Biconical Antenna	SCHWARZBECK	VUBA 9117	9117#359	06-17-2021	06-17-2022
Horn Antenna	SCHWARZBECK	BBHA9120D	912D-916	03-07-2021	03-06-2022
Broad-Band Horn Antenna	SCHWARZBECK	BBHA9170	1067	04-02-2021	04-01-2022
Broad-Band Horn Antenna	SCHWARZBECK	BBHA9170	1068	04-02-2021	04-01-2022
EMI Test Receiver	Rohde & Schwarz	ESRP7	101070	03-03-2021	03-02-2022
Spectrum analyzer	Rohde & Schwarz	FSP30	101454	03-03-2021	03-02-2022
Spectrum analyzer	Keysight	N9010B	MY60240202	10-27-2021	10-26-2022
Simulated Station	Anritsu	MT8820C	6201026545	03-03-2021	03-02-2022
Low Pre-amplifier	SCHWARZBECK	BBV9743B	00305	03-07-2021	03-06-2022
High Pre-amplifier	SKET	LNPA_0118G-50	MF280208233	03-07-2021	03-06-2022
Cable	Qualwave	JYT3M-1G-NN-8M	JYT3M-1	03-07-2021	03-06-2022
Cable	Qualwave	JYT3M-18G-NN-8M	JYT3M-2	03-07-2021	03-06-2022
Cable	Qualwave	JYT3M-1G-BB-5M	JYT3M-3	03-07-2021	03-06-2022
Cable	Bost	JYT3M-40G-SS-8M	JYT3M-4	04-02-2021	04-01-2022
EMI Test Software	Tonscend	TS+	Version:3.0.0.1		

Conducted method:					
Test Equipment	**Manufacturer**	**Model No.**	**Serial No.**	**Cal. Date (mm-dd-yy)**	**Cal. Due date (mm-dd-yy)**
Spectrum Analyzer	Keysight	N9020B	MY57431500	07-02-2021	07-01-2022
Simulated Station	Rohde & Schwarz	CMW500	108209	07-02-2021	07-01-2022
RF Control Unit	Tonscend	JS0806-1	N/A	N/A	N/A
Band Reject Filter Group	Tonscend	JS0806-F	21A8060360	N/A	N/A
Test Software	Tonscend	TS+	Version: 2.6.9.0526		

6. Test results

6.1 Conducted Output Power, ERP and EIRP

Test Requirement:	Part 22.913(a)(5), Part 24.232(c), part 27.50(c)(10), Part 27.50(d)(4), Part 27.50 (h)(2), Part 27.50 (b)(10), Part 90.635(b)
Limit:	LTE Band 7: 2W, LTE Band 12: 3W, LTE Band 17: 3W LTE Band 12: 3W, LTE Band 13: 3W, LTE Band 25: 2W, LTE Band 26: 7W (for Part 22H), 100W (for Part 90S), LTE Band 41: 2W, LTE Band 66: 1W
Test Setup:	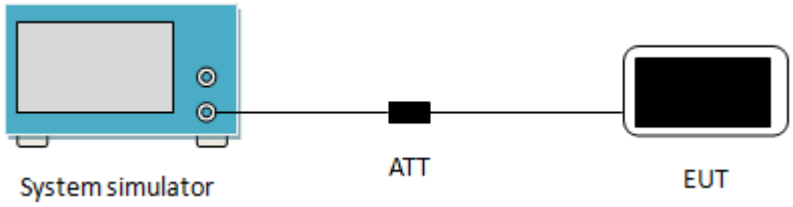
Test Procedure:	The transmitter output was connected to a calibrated attenuator, the other end of which was connected to the CMW500. Transmitter output power was read off in dBm.
Test Instruments:	Refer to section 5.10 for details
Test mode:	Refer to section 5.3 for details
Test results:	Passed
Measurement Data:	Refer to Appendix A – LTE

E

6.2 Peak-to-Average Ratio

Test Requirement:	Part 24.232 (d), Part 27.50(d)(5)
Limit:	The peak-to-average ratio (PAR) of the transmission may not exceed 13 dB.
Test Setup:	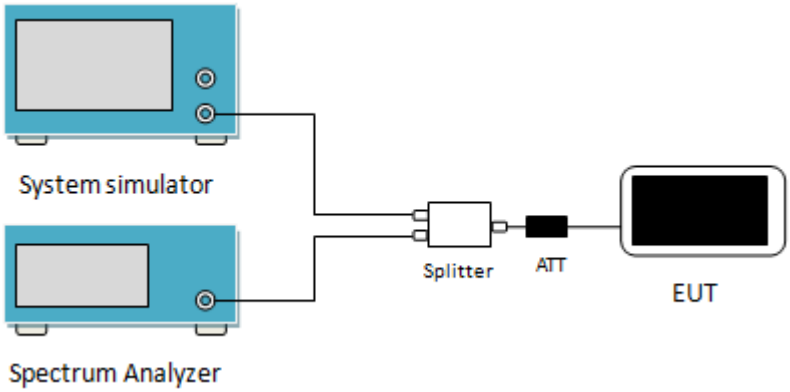
Test Procedure:	1 The RF output of the transceiver was connected to a spectrum analyzer through appropriate attenuation. 2 Set the CCDF option in spectrum analyzer, RBW ≥ OBW, 3 Set the EUT working in highest power level, measured and recorded the 0.1% as PAPR level. 4 Repeat step 1~3 at other frequency and modulations.
Test Instruments:	Refer to section 5.10 for details
Test mode:	Refer to section 5.3 for details
Test results:	Passed
Measurement Data:	Refer to Appendix B – LTE

6.3 Occupy Bandwidth

Test Requirement:	Part 22.917(b), Part 24.238(b), Part 27.53(g), Part 27.53(h), Part 27.53(m), Part 27.53(c)
Test Setup:	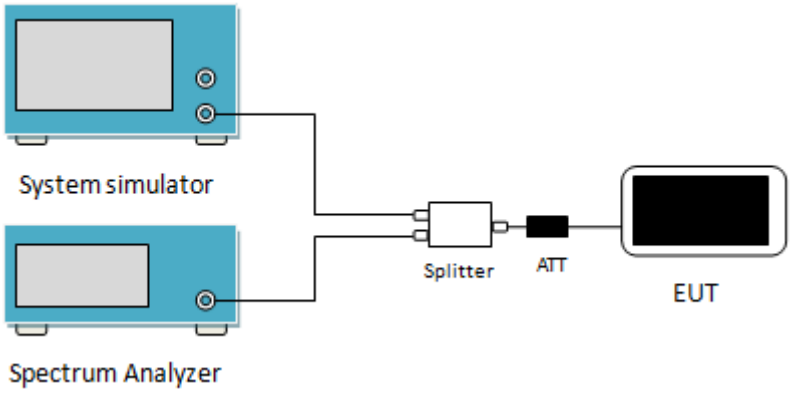
Test Procedure:	1. The EUT's output RF connector was connected with a short cable to the spectrum analyzer 2. RBW was set to about 1% ~ 5% of emission BW, VBW= 3 times RBW. 3. -26dBc display line was placed on the screen (or 99% bandwidth), the occupied bandwidth is the delta frequency between the two points where the display line intersects the signal trace.
Test Instruments:	Refer to section 5.10 for details
Test mode:	Refer to section 5.3 for details
Test results:	Passed
Measurement Data:	Refer to Appendix C – LTE

6.4 Out of band emission at antenna terminals

Test Requirement:	Part 22.917(a), Part 24.238 (a), part 27.53(g), part 27.53(h), Part 27.53(m), Part 27.53(c), Part 90.691(a)
Limit:	LTE Band 12 & 17& 25 & 26(Part 22) & 66: The power of any emission outside a licensee's frequency block shall be attenuated below the transmitter power (P) in watts by at least 43 + 10 $\log_{10}$(P) dB (-13 dBm). LTE Band 7 & 38 & 41: For mobile digital stations, the attenuation factor shall be not less than 40 + 10 log (P) dB on all frequencies between the channel edge and 5 megahertz from the channel edge, 43 + 10 log (P) dB on all frequencies between 5 megahertz and X megahertz from the channel edge, and 55 + 10 log (P) dB on all frequencies more than X megahertz from the channel edge, where X is the greater of 6 megahertz or the actual emission bandwidth as defined in paragraph (m)(6) of this section. In addition, the attenuation factor shall not be less that 43 + 10 log (P) dB on all frequencies between 2490.5 MHz and 2496 MHz and 55 + 10 log (P) dB at or below 2490.5 MHz. LTE Band 13: Part 27.53(c) : For operations in the 746-758 MHz band and the 776-788 MHz band, the power of any emission outside the licensee's frequency band(s) of operation shall be attenuated below the transmitter power (P) within the licensed band(s) of operation, measured in watts, in accordance with the following: (2)On any frequency outside the 776-788 MHz band, the power of any emission shall be attenuated outside the band below the transmitter power (P) by at least 43 + 10 log (P) dB; (4) On all frequencies between 763-775 MHz and 793-805 MHz, by a factor not less than 65 + 10 log (P) dB in a 6.25 kHz band segment, for mobile and portable stations; (5) Compliance with the provisions of paragraphs (c)(1) and (c)(2) of this section is based on the use of measurement instrumentation employing a resolution bandwidth of 100 kHz or greater. However, in the 100 kHz bands immediately outside and adjacent to the frequency block, a resolution bandwidth of at least 30 kHz may be employed; (f) For operations in the 746-758 MHz, 775-788 MHz, and 805-806 MHz bands, emissions in the band 1559-1610 MHz shall be limited to −70 dBW/MHz equivalent isotropically radiated power (EIRP) for wideband signals, and −80 dBW EIRP for discrete emissions of less than 700 Hz bandwidth. For the purpose of equipment authorization, a transmitter shall be tested with an antenna that is representative of the type that will be used with the equipment in normal operation. LTE Band 26(Part 90): (1) For any frequency removed from the EA licensee's frequency block by up to and including 37.5 kHz, the power of any emission shall be attenuated below the transmitter power (P) in watts by at least 116 Log10(f/6.1) decibels or 50 + 10 Log10(P) decibels or 80 decibels, whichever is the lesser attenuation, where f is the frequency removed from the center of the outer channel in the block in kilohertz and where f is greater than 12.5 kHz. (2) For any frequency removed from the EA licensee's frequency block greater than 37.5 kHz, the power of any emission shall be attenuated below the transmitter power (P) in watts by at least 43 + 10Log10(P) decibels or 80 decibels, whichever is the lesser attenuation, where f is the frequency removed from the center of the outer channel in the block in kilohertz and where f is greater than 37.5 kHz.

Test Setup:	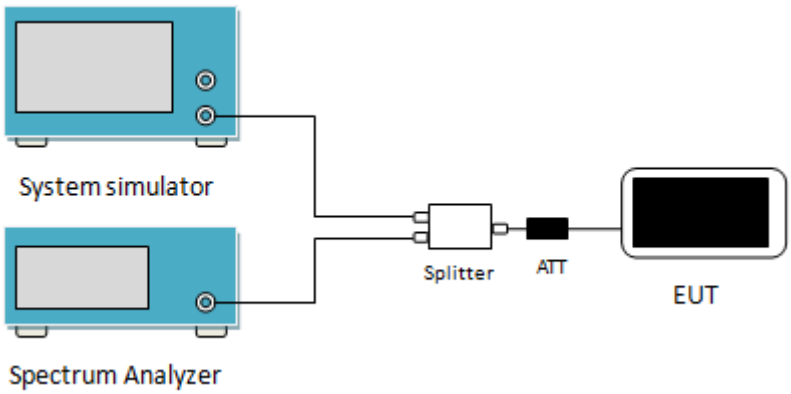
Test Procedure:	1 The RF output of the transceiver was connected to a spectrum analyzer through appropriate attenuation. 2 For the out of band: For Band 5 & 12 & 17 set the RBW=100 kHz, VBW=300 kHz and for Band 2 & 4 & 7 set the RBW=1 MHz, VBW=3 MHz when below 1 GHz, RBW =1 MHz, VBW=3 MHz when above 1 GHz, Start=30MHz, Stop= 10th harmonic. 3 Band Edge Requirements: In the 1 MHz bands immediately outside and adjacent to the frequency block, a resolution bandwidth of at least 1 percent of the emission bandwidth of the fundamental emission of the transmitter may be employed to measure the out of band Emissions.
Test Instruments:	Refer to section 5.10 for details
Test mode:	Refer to section 5.3 for details
Test results:	Passed
Remark:	Pre-scan all RB Size and offset, and found the RB Size and offset of worst case, so the report shows only the worst case test data.
Measurement Data:	Band edge emission: Refer to Appendix D – LTE Spurious emission: Refer to Appendix E – LTE

6.5 Field strength of spurious radiation measurement

Test Requirement:	Part 22.917(a), Part 24.238 (a), part 27.53(g), part 27.53(h), Part 27.53(m), Part 27.53(c), Part 90.691(a)
Limit:	LTE Band 12 & 17 & 13 & 25 & 26(Part 22) & 66: The power of any emission outside a licensee's frequency block shall be attenuated below the transmitter power (P) in watts by at least 43 + 10 $\log_{10}$(P) dB (-13 dBm). LTE Band 7 & 41: For mobile digital stations, the attenuation factor shall be not less than 40 + 10 log (P) dB on all frequencies between the channel edge and 5 megahertz from the channel edge, 43 + 10 log (P) dB on all frequencies between 5 megahertz and X megahertz from the channel edge, and 55 + 10 log (P) dB on all frequencies more than X megahertz from the channel edge, where X is the greater of 6 megahertz or the actual emission bandwidth as defined in paragraph (m)(6) of this section. In addition, the attenuation factor shall not be less that 43 + 10 log (P) dB on all frequencies between 2490.5 MHz and 2496 MHz and 55 + 10 log (P) dB at or below 2490.5 MHz. LTE Band 26(Part 90): For any frequency removed from the EA licensee's frequency block greater than 37.5 kHz, the power of any emission shall be attenuated below the transmitter power (P) in watts by at least 43 + 10Log10(P) decibels or 80 decibels, whichever is the lesser attenuation, where f is the frequency removed from the center of the outer channel in the block in kilohertz and where f is greater than 37.5 kHz.
Test setup:	Below 1GHz 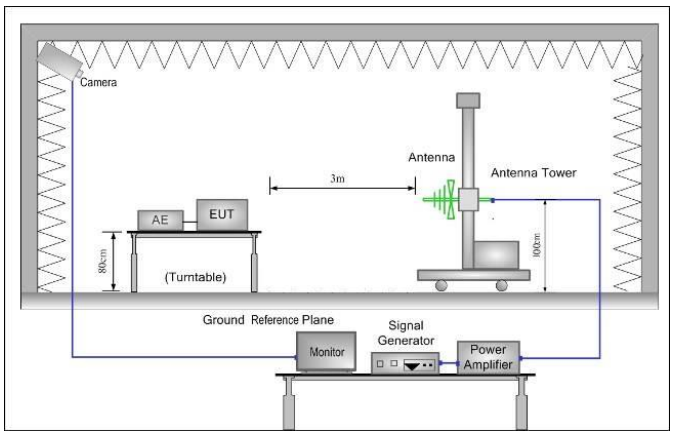 Above 1GHz 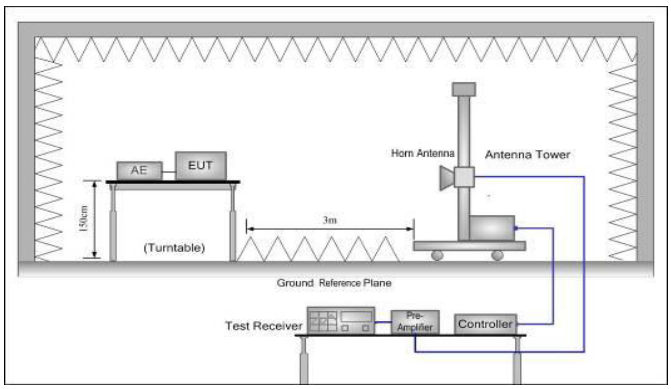
Test Procedure:	1. The EUT was placed on the top of a rotating table 0.8m(below 1GHz)/1.5m(above 1GHz) above the ground at a 3 meter camber. The radiated emission at the fundamental frequency was measured at 3 m with a test antenna and EMI spectrum analyzer.

	2. During the tests, the antenna height and the EUT azimuth were varied in order to identify the maximum level of emissions from the EUT. This maximization process was repeated with the EUT positioned in each of its three orthogonal orientations. 3. The frequency range up to tenth harmonic was investigated for each of three fundamental frequency (low, middle and high channels). Once spurious emission was identified, the power of the emission was determined using the substitution method. 4. The spurious emissions attenuation was calculated as the difference between radiated power at the fundamental frequency and the spurious emissions frequency. ERP / EIRP = S.G. output (dBm) + Antenna Gain(dB/dBi) – Cable Loss (dB)
Test Instruments:	Refer to section 5.10 for details
Test mode:	Refer to section 5.3 for details.
Test results:	Passed

Measurement Data:

LTE Band 2 part:

Band 2 (1.4MHz)						
Lowest channel						
Frequency (MHz)	Spurious Emission level (dBm)	Factor (dB)	Level at antenna terminals (dBm)	Limit Line (dBm)	Margin (dB)	Polarization
3701.40	-36.72	-1.60	-38.32	-13.00	25.32	Vertical
5552.10	-43.71	5.43	-38.28	-13.00	25.28	Vertical
7402.00	-51.15	13.11	-38.04	-13.00	25.04	Vertical
3701.40	-34.57	-2.09	-36.66	-13.00	23.66	Horizontal
5552.10	-49.39	3.81	-45.58	-13.00	32.58	Horizontal
7402.00	-51.38	11.38	-40.00	-13.00	27.00	Horizontal
Middle channel						
Frequency (MHz)	Spurious Emission level (dBm)	Factor (dB)	Level at antenna terminals (dBm)	Limit Line (dBm)	Margin (dB)	Polarization
3760.00	-36.50	-1.31	-37.81	-13.00	24.81	Vertical
5640.00	-43.24	6.98	-36.26	-13.00	23.26	Vertical
7520.00	-51.31	11.74	-39.57	-13.00	26.57	Vertical
3760.00	-34.49	-1.80	-36.29	-13.00	23.29	Horizontal
5640.00	-49.17	4.30	-44.87	-13.00	31.87	Horizontal
7520.00	-51.73	10.25	-41.48	-13.00	28.48	Horizontal
Highest channel						
Frequency (MHz)	Spurious Emission level (dBm)	Factor (dB)	Level at antenna terminals (dBm)	Limit Line (dBm)	Margin (dB)	Polarization
3816.60	-36.70	-1.02	-37.72	-13.00	24.72	Vertical
5724.90	-43.64	8.20	-35.44	-13.00	22.44	Vertical
7633.20	-51.20	11.17	-40.03	-13.00	27.03	Vertical
3816.60	-34.04	-1.49	-35.53	-13.00	22.53	Horizontal
5724.90	-49.64	5.68	-43.96	-13.00	30.96	Horizontal
7633.20	-51.62	10.01	-41.61	-13.00	28.61	Horizontal
Remark: *The emission levels of below 1 GHz are lower than the limit 20dB and not show in test report.*						

Band 2 (20MHz)						
Lowest channel						
Frequency (MHz)	Spurious Emission level (dBm)	Factor (dB)	Level at antenna terminals (dBm)	Limit Line (dBm)	Margin (dB)	Polarization
3720.00	-37.18	-1.51	-38.69	-13.00	25.69	Vertical
5580.00	-43.89	5.80	-38.09	-13.00	25.09	Vertical
7440.00	-50.77	12.61	-38.16	-13.00	25.16	Vertical
3720.00	-34.58	-2.00	-36.58	-13.00	23.58	Horizontal
5580.00	-48.92	3.95	-44.97	-13.00	31.97	Horizontal
7440.00	-51.49	10.94	-40.55	-13.00	27.55	Horizontal
Middle channel						
Frequency (MHz)	Spurious Emission level (dBm)	Factor (dB)	Level at antenna terminals (dBm)	Limit Line (dBm)	Margin (dB)	Polarization
3760.00	-36.88	-1.31	-38.19	-13.00	25.19	Vertical
5640.00	-43.93	6.98	-36.95	-13.00	23.95	Vertical
7520.00	-50.47	11.74	-38.73	-13.00	25.73	Vertical
3760.00	-34.91	-1.80	-36.71	-13.00	23.71	Horizontal
5640.00	-48.96	4.30	-44.66	-13.00	31.66	Horizontal
7520.00	-51.05	10.25	-40.80	-13.00	27.80	Horizontal
Highest channel						
Frequency (MHz)	Spurious Emission level (dBm)	Factor (dB)	Level at antenna terminals (dBm)	Limit Line (dBm)	Margin (dB)	Polarization
3800.00	-36.48	-1.11	-37.59	-13.00	24.59	Vertical
5700.00	-43.75	8.28	-35.47	-13.00	22.47	Vertical
7600.00	-50.25	11.38	-38.87	-13.00	25.87	Vertical
3800.00	-34.93	-1.61	-36.54	-13.00	23.54	Horizontal
5700.00	-48.91	4.67	-44.24	-13.00	31.24	Horizontal
7600.00	-51.31	10.20	-41.11	-13.00	28.11	Horizontal
Remark: *The emission levels of below 1 GHz are lower than the limit 20dB and not show in test report.*						

LTE Band 4 part:

Band 4 (1.4MHz)						
Lowest channel						
Frequency (MHz)	Spurious Emission level (dBm)	Factor (dB)	Level at antenna terminals (dBm)	Limit Line (dBm)	Margin (dB)	Polarization
3421.40	-34.25	-4.27	-38.52	-13.00	25.52	Vertical
5132.10	-40.98	4.41	-36.57	-13.00	23.57	Vertical
6842.80	-50.22	9.91	-40.31	-13.00	27.31	Vertical
3421.40	-37.29	-4.37	-41.66	-13.00	28.66	Horizontal
5132.10	-39.71	3.95	-35.76	-13.00	22.76	Horizontal
6842.80	-49.66	8.86	-40.80	-13.00	27.80	Horizontal
Middle channel						
Frequency (MHz)	Spurious Emission level (dBm)	Factor (dB)	Level at antenna terminals (dBm)	Limit Line (dBm)	Margin (dB)	Polarization
3465.00	-34.67	-3.15	-37.82	-13.00	24.82	Vertical
5197.50	-40.91	3.90	-37.01	-13.00	24.01	Vertical
6930.00	-49.77	10.67	-39.10	-13.00	26.10	Vertical
3465.00	-37.11	-3.25	-40.36	-13.00	27.36	Horizontal
5197.50	-39.87	3.40	-36.47	-13.00	23.47	Horizontal
6930.00	-49.40	9.35	-40.05	-13.00	27.05	Horizontal
Highest channel						
Frequency (MHz)	Spurious Emission level (dBm)	Factor (dB)	Level at antenna terminals (dBm)	Limit Line (dBm)	Margin (dB)	Polarization
3508.60	-34.35	-2.20	-36.55	-13.00	23.55	Vertical
5262.90	-40.81	3.57	-37.24	-13.00	24.24	Vertical
7017.20	-50.13	11.38	-38.75	-13.00	25.75	Vertical
3508.60	-37.14	-2.35	-39.49	-13.00	26.49	Horizontal
5262.90	-39.83	3.18	-36.65	-13.00	23.65	Horizontal
7017.20	-49.78	9.84	-39.94	-13.00	26.94	Horizontal
Remark: *The emission levels of below 1 GHz are lower than the limit 20dB and not show in test report.*						

Band 4 (20MHz)						
Lowest channel						
Frequency (MHz)	Spurious Emission level (dBm)	Factor (dB)	Level at antenna terminals (dBm)	Limit Line (dBm)	Margin (dB)	Polarization
3440.00	-34.12	-3.87	-37.99	-13.00	24.99	Vertical
5160.00	-41.31	3.71	-37.60	-13.00	24.60	Vertical
6880.00	-49.78	9.08	-40.70	-13.00	27.70	Vertical
3440.00	-37.18	-3.99	-41.17	-13.00	28.17	Horizontal
5160.00	-39.64	4.20	-35.44	-13.00	22.44	Horizontal
6880.00	-49.68	10.27	-39.41	-13.00	26.41	Horizontal
Middle channel						
Frequency (MHz)	Spurious Emission level (dBm)	Factor (dB)	Level at antenna terminals (dBm)	Limit Line (dBm)	Margin (dB)	Polarization
3465.00	-34.48	-3.15	-37.63	-13.00	24.63	Vertical
5197.50	-40.99	3.90	-37.09	-13.00	24.09	Vertical
6930.00	-49.39	10.67	-38.72	-13.00	25.72	Vertical
3465.00	-37.41	-3.25	-40.66	-13.00	27.66	Horizontal
5197.50	-39.32	3.40	-35.92	-13.00	22.92	Horizontal
6930.00	-49.64	9.35	-40.29	-13.00	27.29	Horizontal
Highest channel						
Frequency (MHz)	Spurious Emission level (dBm)	Factor (dB)	Level at antenna terminals (dBm)	Limit Line (dBm)	Margin (dB)	Polarization
3490.00	-34.92	-2.50	-37.42	-13.00	24.42	Vertical
5235.00	-41.16	3.71	-37.45	-13.00	24.45	Vertical
6980.00	-49.80	11.02	-38.78	-13.00	25.78	Vertical
3490.00	-37.56	-2.60	-40.16	-13.00	27.16	Horizontal
5235.00	-39.40	3.27	-36.13	-13.00	23.13	Horizontal
6980.00	-49.26	9.59	-39.67	-13.00	26.67	Horizontal

Remark:

The emission levels of below 1 GHz are lower than the limit 20dB and not show in test report.

LTE Band 5 part:

Band 5 (1.4MHz)						
Lowest channel						
Frequency (MHz)	Spurious Emission level (dBm)	Factor (dB)	Level at antenna terminals (dBm)	Limit Line (dBm)	Margin (dB)	Polarization
1649.40	-39.72	-11.10	-50.82	-13.00	37.82	Vertical
2474.10	-40.93	-6.20	-47.13	-13.00	34.13	Vertical
3298.80	-36.87	-4.96	-41.83	-13.00	28.83	Vertical
1649.40	-37.13	-11.00	-48.13	-13.00	35.13	Horizontal
2474.10	-45.15	-6.54	-51.69	-13.00	38.69	Horizontal
3298.80	-36.32	-5.25	-41.57	-13.00	28.57	Horizontal
Middle channel						
Frequency (MHz)	Spurious Emission level (dBm)	Factor (dB)	Level at antenna terminals (dBm)	Limit Line (dBm)	Margin (dB)	Polarization
1673.30	-39.49	-11.13	-50.62	-13.00	37.62	Vertical
2509.50	-40.45	-6.20	-46.65	-13.00	33.65	Vertical
3346.00	-36.77	-5.03	-41.80	-13.00	28.80	Vertical
1673.30	-37.04	-11.04	-48.08	-13.00	35.08	Horizontal
2509.50	-44.91	-6.51	-51.42	-13.00	38.42	Horizontal
3346.00	-36.66	-5.23	-41.89	-13.00	28.89	Horizontal
Highest channel						
Frequency (MHz)	Spurious Emission level (dBm)	Factor (dB)	Level at antenna terminals (dBm)	Limit Line (dBm)	Margin (dB)	Polarization
1696.60	-39.45	-11.15	-50.60	-13.00	37.60	Vertical
2544.90	-40.37	-6.07	-46.44	-13.00	33.44	Vertical
3393.20	-36.70	-5.09	-41.79	-13.00	28.79	Vertical
1696.60	-37.38	-11.09	-48.47	-13.00	35.47	Horizontal
2544.90	-44.90	-6.38	-51.28	-13.00	38.28	Horizontal
3393.20	-36.32	-5.20	-41.52	-13.00	28.52	Horizontal
Remark: *The emission levels of below 1 GHz are lower than the limit 20dB and not show in test report.*						

Band 5 (10MHz)						
Lowest channel						
Frequency (MHz)	Spurious Emission level (dBm)	Factor (dB)	Level at antenna terminals (dBm)	Limit Line (dBm)	Margin (dB)	Polarization
1658.00	-39.27	-11.11	-50.38	-13.00	37.38	Vertical
2487.00	-40.42	-6.22	-46.64	-13.00	33.64	Vertical
3316.00	-36.91	-4.98	-41.89	-13.00	28.89	Vertical
1658.00	-37.73	-11.02	-48.75	-13.00	35.75	Horizontal
2487.00	-45.03	-6.54	-51.57	-13.00	38.57	Horizontal
3316.00	-36.52	-5.24	-41.76	-13.00	28.76	Horizontal
Middle channel						
Frequency (MHz)	Spurious Emission level (dBm)	Factor (dB)	Level at antenna terminals (dBm)	Limit Line (dBm)	Margin (dB)	Polarization
1673.30	-39.77	-11.13	-50.90	-13.00	37.90	Vertical
2509.50	-40.26	-6.20	-46.46	-13.00	33.46	Vertical
3346.00	-36.66	-5.03	-41.69	-13.00	28.69	Vertical
1673.30	-37.38	-11.05	-48.43	-13.00	35.43	Horizontal
2509.50	-45.14	-6.51	-51.65	-13.00	38.65	Horizontal
3346.00	-36.15	-5.23	-41.38	-13.00	28.38	Horizontal
Highest channel						
Frequency (MHz)	Spurious Emission level (dBm)	Factor (dB)	Level at antenna terminals (dBm)	Limit Line (dBm)	Margin (dB)	Polarization
1688.00	-39.37	-11.14	-50.51	-13.00	37.51	Vertical
2532.00	-40.33	-6.11	-46.44	-13.00	33.44	Vertical
3376.00	-36.94	-5.07	-42.01	-13.00	29.01	Vertical
1688.00	-37.65	-11.07	-48.72	-13.00	35.72	Horizontal
2532.00	-45.36	-6.42	-51.78	-13.00	38.78	Horizontal
3376.00	-35.67	-5.21	-40.88	-13.00	27.88	Horizontal
Remark: *The emission levels of below 1 GHz are lower than the limit 20dB and not show in test report.*						

LTE Band 7 part:

Band 7 (5MHz)						
Lowest channel						
Frequency (MHz)	Spurious Emission level (dBm)	Factor (dB)	Level at antenna terminals (dBm)	Limit Line (dBm)	Margin (dB)	Polarization
5005.00	-43.72	4.56	-39.16	-25.00	14.16	Vertical
7507.50	-50.83	13.14	-37.69	-25.00	12.69	Vertical
10010.00	-49.97	16.93	-33.04	-25.00	8.04	Vertical
5005.00	-44.92	4.56	-40.36	-25.00	15.36	Horizontal
7507.50	-48.02	13.14	-34.88	-25.00	9.88	Horizontal
10010.00	-50.99	16.93	-34.06	-25.00	9.06	Horizontal
Middle channel						
Frequency (MHz)	Spurious Emission level (dBm)	Factor (dB)	Level at antenna terminals (dBm)	Limit Line (dBm)	Margin (dB)	Polarization
5070.00	-43.85	4.55	-39.30	-25.00	14.30	Vertical
7605.00	-50.98	13.58	-37.40	-25.00	12.40	Vertical
10140.00	-49.48	17.44	-32.04	-25.00	7.04	Vertical
5070.00	-44.45	4.55	-39.90	-25.00	14.90	Horizontal
7605.00	-47.69	13.58	-34.11	-25.00	9.11	Horizontal
10140.00	-51.22	17.44	-33.78	-25.00	8.78	Horizontal
Highest channel						
Frequency (MHz)	Spurious Emission level (dBm)	Factor (dB)	Level at antenna terminals (dBm)	Limit Line (dBm)	Margin (dB)	Polarization
5135.00	-44.01	4.62	-39.39	-25.00	14.39	Vertical
7702.50	-51.36	13.24	-38.12	-25.00	13.12	Vertical
10270.00	-49.59	18.40	-31.19	-25.00	6.19	Vertical
5135.00	-43.96	4.62	-39.34	-25.00	14.34	Horizontal
7702.50	-47.61	13.24	-34.37	-25.00	9.37	Horizontal
10270.00	-51.60	18.40	-33.20	-25.00	8.20	Horizontal
Remark: *The emission levels of below 1 GHz are lower than the limit 20dB and not show in test report.*						

Band 7 (20MHz)						
Lowest channel						
Frequency (MHz)	Spurious Emission level (dBm)	Factor (dB)	Level at antenna terminals (dBm)	Limit Line (dBm)	Margin (dB)	Polarization
5020.00	-44.51	4.56	-39.95	-25.00	14.95	Vertical
7530.00	-51.74	13.29	-38.45	-25.00	13.45	Vertical
10040.00	-49.14	16.98	-32.16	-25.00	7.16	Vertical
5020.00	-44.18	4.56	-39.62	-25.00	14.62	Horizontal
7530.00	-47.61	13.29	-34.32	-25.00	9.32	Horizontal
10040.00	-51.40	16.98	-34.42	-25.00	9.42	Horizontal
Middle channel						
Frequency (MHz)	Spurious Emission level (dBm)	Factor (dB)	Level at antenna terminals (dBm)	Limit Line (dBm)	Margin (dB)	Polarization
5070.00	-44.83	4.55	-40.28	-25.00	15.28	Vertical
7605.00	-51.87	13.58	-38.29	-25.00	13.29	Vertical
10140.00	-48.96	17.44	-31.52	-25.00	6.52	Vertical
5070.00	-44.63	4.55	-40.08	-25.00	15.08	Horizontal
7605.00	-47.28	13.58	-33.70	-25.00	8.70	Horizontal
10140.00	-51.59	17.44	-34.15	-25.00	9.15	Horizontal
Highest channel						
Frequency (MHz)	Spurious Emission level (dBm)	Factor (dB)	Level at antenna terminals (dBm)	Limit Line (dBm)	Margin (dB)	Polarization
5120.00	-44.77	4.62	-40.15	-25.00	15.15	Vertical
7680.00	-52.08	13.18	-38.90	-25.00	13.90	Vertical
10240.00	-49.13	18.27	-30.86	-25.00	5.86	Vertical
5120.00	-44.26	4.62	-39.64	-25.00	14.64	Horizontal
7680.00	-46.84	13.18	-33.66	-25.00	8.66	Horizontal
10240.00	-51.45	18.27	-33.18	-25.00	8.18	Horizontal

Remark:

The emission levels of below 1 GHz are lower than the limit 20dB and not show in test report.

LTE Band 12 part:

Band 12 (1.4MHz)						
Lowest channel						
Frequency (MHz)	Spurious Emission level (dBm)	Factor (dB)	Level at antenna terminals (dBm)	Limit Line (dBm)	Margin (dB)	Polarization
1399.40	-48.54	-8.61	-57.15	-13.00	44.15	Vertical
2099.10	-48.35	-7.11	-55.46	-13.00	42.46	Vertical
2798.80	-47.57	-5.44	-53.01	-13.00	40.01	Vertical
1399.40	-48.46	-9.09	-57.55	-13.00	44.55	Horizontal
2099.10	-40.99	-6.80	-47.79	-13.00	34.79	Horizontal
2798.80	-48.23	-5.44	-53.67	-13.00	40.67	Horizontal
Middle channel						
Frequency (MHz)	Spurious Emission level (dBm)	Factor (dB)	Level at antenna terminals (dBm)	Limit Line (dBm)	Margin (dB)	Polarization
1415.00	-48.90	-8.88	-57.78	-13.00	44.78	Vertical
2122.50	-48.19	-6.68	-54.87	-13.00	41.87	Vertical
2830.00	-47.59	-5.32	-52.91	-13.00	39.91	Vertical
1415.00	-48.68	-9.31	-57.99	-13.00	44.99	Horizontal
2122.50	-40.59	-6.49	-47.08	-13.00	34.08	Horizontal
2830.00	-48.17	-5.38	-53.55	-13.00	40.55	Horizontal
Highest channel						
Frequency (MHz)	Spurious Emission level (dBm)	Factor (dB)	Level at antenna terminals (dBm)	Limit Line (dBm)	Margin (dB)	Polarization
1430.60	-49.08	-9.15	-58.23	-13.00	45.23	Vertical
2145.90	-48.59	-6.20	-54.79	-13.00	41.79	Vertical
2861.20	-47.88	-5.20	-53.08	-13.00	40.08	Vertical
1430.60	-48.25	-9.54	-57.79	-13.00	44.79	Horizontal
2145.90	-40.75	-6.15	-46.90	-13.00	33.90	Horizontal
2861.20	-47.92	-5.32	-53.24	-13.00	40.24	Horizontal

Remark:

The emission levels of below 1 GHz are lower than the limit 20dB and not show in test report.

Band 12 (10MHz)						
Lowest channel						
Frequency (MHz)	Spurious Emission level (dBm)	Factor (dB)	Level at antenna terminals (dBm)	Limit Line (dBm)	Margin (dB)	Polarization
1408.00	-49.21	-8.75	-57.96	-13.00	44.96	Vertical
2112.00	-48.31	-6.85	-55.16	-13.00	42.16	Vertical
2816.00	-47.62	-5.37	-52.99	-13.00	39.99	Vertical
1408.00	-48.19	-9.21	-57.40	-13.00	44.40	Horizontal
2112.00	-40.82	-6.62	-47.44	-13.00	34.44	Horizontal
2816.00	-47.5	-5.40	-52.90	-13.00	39.90	Horizontal
Middle channel						
Frequency (MHz)	Spurious Emission level (dBm)	Factor (dB)	Level at antenna terminals (dBm)	Limit Line (dBm)	Margin (dB)	Polarization
1415.00	-48.73	-8.88	-57.61	-13.00	44.61	Vertical
2122.50	-48.52	-6.88	-55.40	-13.00	42.40	Vertical
2830.00	-47.72	-5.32	-53.04	-13.00	40.04	Vertical
1415.00	-48.1	-9.31	-57.41	-13.00	44.41	Horizontal
2122.50	-40.55	-6.49	-47.04	-13.00	34.04	Horizontal
2830.00	-47.72	-5.38	-53.10	-13.00	40.10	Horizontal
Highest channel						
Frequency (MHz)	Spurious Emission level (dBm)	Factor (dB)	Level at antenna terminals (dBm)	Limit Line (dBm)	Margin (dB)	Polarization
1422.00	-48.59	-9.00	-57.59	-13.00	44.59	Vertical
2133.00	-48.85	-6.46	-55.31	-13.00	42.31	Vertical
2844.00	-47.88	-5.27	-53.15	-13.00	40.15	Vertical
1422.00	-48.40	-9.41	-57.81	-13.00	44.81	Horizontal
2133.00	-40.55	-6.33	-46.88	-13.00	33.88	Horizontal
2844.00	-47.92	-5.35	-53.27	-13.00	40.27	Horizontal
Remark: *The emission levels of below 1 GHz are lower than the limit 20dB and not show in test report.*						

LTE Band 13 part:

Band 13 (5MHz)						
Lowest channel						
Frequency (MHz)	Spurious Emission level (dBm)	Factor (dB)	Level at antenna terminals (dBm)	Limit Line (dBm)	Margin (dB)	Polarization
1559.00	-49.03	-10.73	-59.76	-13.00	46.76	Vertical
2338.50	-44.55	-5.66	-50.21	-13.00	37.21	Vertical
3118.00	-46.84	-3.84	-50.68	-13.00	37.68	Vertical
1559.00	-48.40	-10.75	-59.15	-13.00	46.15	Horizontal
2338.50	-43.24	-5.90	-49.14	-13.00	36.14	Horizontal
3118.00	-47.37	-3.87	-51.24	-13.00	38.24	Horizontal
Middle channel						
Frequency (MHz)	Spurious Emission level (dBm)	Factor (dB)	Level at antenna terminals (dBm)	Limit Line (dBm)	Margin (dB)	Polarization
1564.00	-49.45	-10.79	-60.24	-13.00	47.24	Vertical
2346.00	-44.24	-5.71	-49.95	-13.00	36.95	Vertical
3128.00	-47.15	-3.86	-51.01	-13.00	38.01	Vertical
1564.00	-48.47	-10.77	-59.24	-13.00	46.24	Horizontal
2346.00	-43.65	-5.98	-49.63	-13.00	36.63	Horizontal
3128.00	-47.36	-3.88	-51.24	-13.00	38.24	Horizontal
Highest channel						
Frequency (MHz)	Spurious Emission level (dBm)	Factor (dB)	Level at antenna terminals (dBm)	Limit Line (dBm)	Margin (dB)	Polarization
1569.00	-49.23	-10.83	-60.06	-13.00	47.06	Vertical
2353.50	-44.23	-5.76	-49.99	-13.00	36.99	Vertical
3138.00	-46.87	-3.89	-50.76	-13.00	37.76	Vertical
1569.00	-48.88	-10.79	-59.67	-13.00	46.67	Horizontal
2353.50	-43.70	-6.06	-49.76	-13.00	36.76	Horizontal
3138.00	-47.64	-3.89	-51.53	-13.00	38.53	Horizontal
Remark: *The emission levels of below 1 GHz are lower than the limit 20dB and not show in test report.*						

Band 13 (10MHz)						
Middle channel						
Frequency (MHz)	Spurious Emission level (dBm)	Factor (dB)	Level at antenna terminals (dBm)	Limit Line (dBm)	Margin (dB)	Polarization
1564.00	-49.10	-10.79	-59.89	-13.00	46.89	Vertical
2346.00	-44.27	-5.71	-49.98	-13.00	36.98	Vertical
3128.00	-46.84	-3.86	-50.70	-13.00	37.70	Vertical
1564.00	-48.98	-10.77	-59.75	-13.00	46.75	Horizontal
2346.00	-43.36	-5.98	-49.34	-13.00	36.34	Horizontal
3128.00	-47.84	-3.88	-51.72	-13.00	38.72	Horizontal
Remark: *The emission levels of below 1 GHz are lower than the limit 20dB and not show in test report.*						

LTE Band 17 part:

Band 17 (5MHz)						
Lowest channel						
Frequency (MHz)	Spurious Emission level (dBm)	Factor (dB)	Level at antenna terminals (dBm)	Limit Line (dBm)	Margin (dB)	Polarization
1413.00	-47.73	-8.60	-56.33	-13.00	43.33	Vertical
2119.50	-48.92	-7.65	-56.57	-13.00	43.57	Vertical
2826.00	-47.86	-3.91	-51.77	-13.00	38.77	Vertical
1413.00	-48.66	-8.60	-57.26	-13.00	44.26	Horizontal
2119.50	-41.76	-7.65	-49.41	-13.00	36.41	Horizontal
2826.00	-47.71	-3.91	-51.62	-13.00	38.62	Horizontal
Middle channel						
Frequency (MHz)	Spurious Emission level (dBm)	Factor (dB)	Level at antenna terminals (dBm)	Limit Line (dBm)	Margin (dB)	Polarization
1420.00	-47.99	-8.60	-56.59	-13.00	43.59	Vertical
2130.00	-49.41	-7.54	-56.95	-13.00	43.95	Vertical
2840.00	-47.72	-3.85	-51.57	-13.00	38.57	Vertical
1420.00	-48.32	-8.60	-56.92	-13.00	43.92	Horizontal
2130.00	-42.01	-7.54	-49.55	-13.00	36.55	Horizontal
2840.00	-48.03	-3.85	-51.88	-13.00	38.88	Horizontal
Highest channel						
Frequency (MHz)	Spurious Emission level (dBm)	Factor (dB)	Level at antenna terminals (dBm)	Limit Line (dBm)	Margin (dB)	Polarization
1427.00	-48.10	-8.77	-56.87	-13.00	43.87	Vertical
2140.50	-49.27	-7.54	-56.81	-13.00	43.81	Vertical
2854.00	-47.33	-3.85	-51.18	-13.00	38.18	Vertical
1427.00	-48.34	-8.77	-57.11	-13.00	44.11	Horizontal
2140.50	-41.60	-7.54	-49.14	-13.00	36.14	Horizontal
2854.00	-48.02	-3.85	-51.87	-13.00	38.87	Horizontal
Remark: *The emission levels of below 1 GHz are lower than the limit 20dB and not show in test report.*						

Band 17 (10MHz)						
Lowest channel						
Frequency (MHz)	Spurious Emission level (dBm)	Factor (dB)	Level at antenna terminals (dBm)	Limit Line (dBm)	Margin (dB)	Polarization
1418.00	-48.26	-8.60	-56.86	-13.00	43.86	Vertical
2127.00	-49.19	-7.65	-56.84	-13.00	43.84	Vertical
2836.00	-47.16	-3.85	-51.01	-13.00	38.01	Vertical
1418.00	-48.05	-8.60	-56.65	-13.00	43.65	Horizontal
2127.00	-42.07	-7.65	-49.72	-13.00	36.72	Horizontal
2836.00	-48.35	-3.85	-52.20	-13.00	39.20	Horizontal
Middle channel						
Frequency (MHz)	Spurious Emission level (dBm)	Factor (dB)	Level at antenna terminals (dBm)	Limit Line (dBm)	Margin (dB)	Polarization
1420.00	-48.53	-8.60	-57.13	-13.00	44.13	Vertical
2130.00	-49.57	-7.54	-57.11	-13.00	44.11	Vertical
2840.00	-47.19	-3.85	-51.04	-13.00	38.04	Vertical
1420.00	-47.72	-8.60	-56.32	-13.00	43.32	Horizontal
2130.00	-41.93	-7.54	-49.47	-13.00	36.47	Horizontal
2840.00	-48.73	-3.85	-52.58	-13.00	39.58	Horizontal
Highest channel						
Frequency (MHz)	Spurious Emission level (dBm)	Factor (dB)	Level at antenna terminals (dBm)	Limit Line (dBm)	Margin (dB)	Polarization
1422.00	-48.04	-8.60	-56.64	-13.00	43.64	Vertical
2133.00	-49.30	-7.54	-56.84	-13.00	43.84	Vertical
2844.00	-47.62	-3.85	-51.47	-13.00	38.47	Vertical
1422.00	-47.92	-8.60	-56.52	-13.00	43.52	Horizontal
2133.00	-41.81	-7.54	-49.35	-13.00	36.35	Horizontal
2844.00	-48.64	-3.85	-52.49	-13.00	39.49	Horizontal

Remark:

The emission levels of below 1 GHz are lower than the limit 20dB and not show in test report.

LTE Band 25 part:

Band 25 (1.4MHz)						
Lowest channel						
Frequency (MHz)	Spurious Emission level (dBm)	Factor (dB)	Level at antenna terminals (dBm)	Limit Line (dBm)	Margin (dB)	Polarization
3701.40	-37.94	-1.60	-39.54	-13.00	26.54	Vertical
5552.10	-50.80	5.43	-45.37	-13.00	32.37	Vertical
7402.80	-51.27	13.11	-38.16	-13.00	25.16	Vertical
3701.40	-34.67	-2.09	-36.76	-13.00	23.76	Horizontal
5552.10	-50.01	3.81	-46.20	-13.00	33.20	Horizontal
7402.80	-50.33	11.38	-38.95	-13.00	25.95	Horizontal
Middle channel						
Frequency (MHz)	Spurious Emission level (dBm)	Factor (dB)	Level at antenna terminals (dBm)	Limit Line (dBm)	Margin (dB)	Polarization
3765.00	-37.46	-1.28	-38.74	-13.00	25.74	Vertical
5647.50	-50.89	7.14	-43.75	-13.00	30.75	Vertical
7530.00	-51.24	11.69	-39.55	-13.00	26.55	Vertical
3765.00	-34.59	-1.78	-36.37	-13.00	23.37	Horizontal
5647.50	-49.60	4.34	-45.26	-13.00	32.26	Horizontal
7530.00	-50.44	10.24	-40.20	-13.00	27.20	Horizontal
Highest channel						
Frequency (MHz)	Spurious Emission level (dBm)	Factor (dB)	Level at antenna terminals (dBm)	Limit Line (dBm)	Margin (dB)	Polarization
3828.60	-37.08	-0.97	-38.05	-13.00	25.05	Vertical
5742.90	-50.97	8.17	-42.80	-13.00	29.80	Vertical
7657.20	-50.79	11.06	-39.73	-13.00	26.73	Vertical
3828.60	-34.58	-1.43	-36.01	-13.00	23.01	Horizontal
5742.90	-49.56	6.21	-43.35	-13.00	30.35	Horizontal
7657.20	-50.00	9.91	-40.09	-13.00	27.09	Horizontal
Remark: *The emission levels of below 1 GHz are lower than the limit 20dB and not show in test report.*						

Band 25 (20MHz)						
Lowest channel						
Frequency (MHz)	Spurious Emission level (dBm)	Factor (dB)	Level at antenna terminals (dBm)	Limit Line (dBm)	Margin (dB)	Polarization
3720.00	-36.74	-1.51	-38.25	-13.00	25.25	Vertical
5580.00	-51.32	5.80	-45.52	-13.00	32.52	Vertical
7440.00	-50.83	12.61	-38.22	-13.00	25.22	Vertical
3720.00	-34.58	-2.00	-36.58	-13.00	23.58	Horizontal
5580.00	-49.69	3.95	-45.74	-13.00	32.74	Horizontal
7440.00	-49.90	10.94	-38.96	-13.00	25.96	Horizontal
Middle channel						
Frequency (MHz)	Spurious Emission level (dBm)	Factor (dB)	Level at antenna terminals (dBm)	Limit Line (dBm)	Margin (dB)	Polarization
3465.00	-37.21	-1.28	-38.49	-13.00	25.49	Vertical
5197.50	-51.02	7.14	-43.88	-13.00	30.88	Vertical
6930.00	-50.47	11.69	-38.78	-13.00	25.78	Vertical
3465.00	-34.69	-1.78	-36.47	-13.00	23.47	Horizontal
5197.50	-49.38	4.34	-45.04	-13.00	32.04	Horizontal
6930.00	-50.07	10.24	-39.83	-13.00	26.83	Horizontal
Highest channel						
Frequency (MHz)	Spurious Emission level (dBm)	Factor (dB)	Level at antenna terminals (dBm)	Limit Line (dBm)	Margin (dB)	Polarization
3810.00	-37.22	-1.06	-38.28	-13.00	25.28	Vertical
5715.00	-50.73	8.24	-42.49	-13.00	29.49	Vertical
7620.00	-50.40	11.27	-39.13	-13.00	26.13	Vertical
3810.00	-34.76	-1.55	-36.31	-13.00	23.31	Horizontal
5715.00	-49.15	5.20	-43.95	-13.00	30.95	Horizontal
7620.00	-49.99	10.10	-39.89	-13.00	26.89	Horizontal
Remark: *The emission levels of below 1 GHz are lower than the limit 20dB and not show in test report.*						

LTE Band 26 part:

Band 26 (1.4MHz) (Part 22)						
Lowest channel						
Frequency (MHz)	Spurious Emission level (dBm)	Factor (dB)	Level at antenna terminals (dBm)	Limit Line (dBm)	Margin (dB)	Polarization
1649.40	-43.55	-11.09	-11.1	-13.00	-1.90	Vertical
2474.10	-48.22	-6.15	-6.2	-13.00	-6.80	Vertical
3298.80	-39.46	-4.59	-4.96	-13.00	-8.04	Vertical
1649.40	-44.03	-10.97	-11	-13.00	-2.00	Horizontal
2474.10	-44.47	-6.55	-6.54	-13.00	-6.46	Horizontal
3298.80	-41.41	-4.72	-5.25	-13.00	-7.75	Horizontal
Middle channel						
Frequency (MHz)	Spurious Emission level (dBm)	Factor (dB)	Level at antenna terminals (dBm)	Limit Line (dBm)	Margin (dB)	Polarization
1673.00	-43.94	-11.09	-11.13	-13.00	-1.87	Vertical
2509.50	-48.30	-6.17	-6.2	-13.00	-6.80	Vertical
3346.00	-39.86	-4.75	-5.03	-13.00	-7.97	Vertical
1673.00	-44.50	-10.98	-11.05	-13.00	-1.95	Horizontal
2509.50	-44.74	-6.54	-6.51	-13.00	-6.49	Horizontal
3346.00	-41.28	-4.95	-5.23	-13.00	-7.77	Horizontal
Highest channel						
Frequency (MHz)	Spurious Emission level (dBm)	Factor (dB)	Level at antenna terminals (dBm)	Limit Line (dBm)	Margin (dB)	Polarization
1696.60	-43.78	-11.10	-11.15	-13.00	-1.85	Vertical
2544.90	-48.55	-6.19	-6.07	-13.00	-6.93	Vertical
3393.20	-39.92	-4.91	-5.09	-13.00	-7.91	Vertical
1696.60	-44.98	-11.00	-11.09	-13.00	-1.91	Horizontal
2544.90	-44.80	-6.54	-6.38	-13.00	-6.62	Horizontal
3393.20	-41.07	-5.18	-5.2	-13.00	-7.80	Horizontal
Remark: *The emission levels of below 1 GHz are lower than the limit 20dB and not show in test report.*						

Band 26 (15MHz) (Part 22)						
Lowest channel						
Frequency (MHz)	Spurious Emission level (dBm)	Factor (dB)	Level at antenna terminals (dBm)	Limit Line (dBm)	Margin (dB)	Polarization
1663.00	-43.85	-11.12	-54.97	-13.00	41.97	Vertical
2494.50	-48.42	-6.23	-54.65	-13.00	41.65	Vertical
3326.00	-39.89	-5.00	-44.89	-13.00	31.89	Vertical
1663.00	-45.14	-11.03	-56.17	-13.00	43.17	Horizontal
2494.50	-45.10	-6.54	-51.64	-13.00	38.64	Horizontal
3326.00	-41.25	-5.24	-46.49	-13.00	33.49	Horizontal
Middle channel						
Frequency (MHz)	Spurious Emission level (dBm)	Factor (dB)	Level at antenna terminals (dBm)	Limit Line (dBm)	Margin (dB)	Polarization
1673.00	-44.09	-11.13	-55.22	-13.00	42.22	Vertical
2509.50	-48.31	-6.20	-54.51	-13.00	41.51	Vertical
3346.00	-39.63	-5.03	-44.66	-13.00	31.66	Vertical
1673.00	-44.80	-11.05	-55.85	-13.00	42.85	Horizontal
2509.50	-45.01	-6.51	-51.52	-13.00	38.52	Horizontal
3346.00	-40.87	-5.23	-46.10	-13.00	33.10	Horizontal
Highest channel						
Frequency (MHz)	Spurious Emission level (dBm)	Factor (dB)	Level at antenna terminals (dBm)	Limit Line (dBm)	Margin (dB)	Polarization
1683.00	-44.25	-11.14	-55.39	-13.00	42.39	Vertical
2524.50	-47.95	-6.15	-54.10	-13.00	41.10	Vertical
3366.00	-39.61	-5.05	-44.66	-13.00	31.66	Vertical
1683.00	-45.03	-11.06	-56.09	-13.00	43.09	Horizontal
2524.50	-45.26	-6.45	-51.71	-13.00	38.71	Horizontal
3366.00	-40.94	-5.22	-46.16	-13.00	33.16	Horizontal

Remark:

The emission levels of below 1 GHz are lower than the limit 20dB and not show in test report.

Band 26 (1.4MHz) (Part 90)						
Lowest channel						
Frequency (MHz)	Spurious Emission level (dBm)	Factor (dB)	Level at antenna terminals (dBm)	Limit Line (dBm)	Margin (dB)	Polarization
1629.40	-43.43	-11.09	-54.52	-13.00	41.52	Vertical
2444.10	-48.52	-6.15	-54.67	-13.00	41.67	Vertical
3258.80	-39.48	-4.59	-44.07	-13.00	31.07	Vertical
1629.40	-44.13	-10.97	-55.10	-13.00	42.10	Horizontal
2444.10	-44.87	-6.55	-51.42	-13.00	38.42	Horizontal
3258.80	-41.96	-4.72	-46.68	-13.00	33.68	Horizontal
Middle channel						
Frequency (MHz)	Spurious Emission level (dBm)	Factor (dB)	Level at antenna terminals (dBm)	Limit Line (dBm)	Margin (dB)	Polarization
1638.00	-42.97	-11.09	-54.06	-13.00	41.06	Vertical
2457.00	-48.75	-6.17	-54.92	-13.00	41.92	Vertical
3276.00	-39.34	-4.75	-44.09	-13.00	31.09	Vertical
1638.00	-44.32	-10.98	-55.30	-13.00	42.30	Horizontal
2457.00	-44.60	-6.54	-51.14	-13.00	38.14	Horizontal
3276.00	-42.29	-4.95	-47.24	-13.00	34.24	Horizontal
Highest channel						
Frequency (MHz)	Spurious Emission level (dBm)	Factor (dB)	Level at antenna terminals (dBm)	Limit Line (dBm)	Margin (dB)	Polarization
1646.60	-43.11	-11.10	-54.21	-13.00	41.21	Vertical
2469.90	-48.36	-6.19	-54.55	-13.00	41.55	Vertical
3293.20	-39.61	-4.91	-44.52	-13.00	31.52	Vertical
1646.60	-44.28	-11.00	-55.28	-13.00	42.28	Horizontal
2469.90	-44.54	-6.54	-51.08	-13.00	38.08	Horizontal
3293.20	-41.85	-5.18	-47.03	-13.00	34.03	Horizontal
Remark: *The emission levels of below 1 GHz are lower than the limit 20dB and not show in test report.*						

Band 26 (15MHz) (Part 90)						
Middle channel						
Frequency (MHz)	Spurious Emission level (dBm)	Factor (dB)	Level at antenna terminals (dBm)	Limit Line (dBm)	Margin (dB)	Polarization
1638.00	-43.55	-11.10	-54.65	-13.00	41.65	Vertical
2457.00	-48.71	-6.17	-54.88	-13.00	41.88	Vertical
3276.00	-39.19	-4.75	-43.94	-13.00	30.94	Vertical
1638.00	-44.18	-10.99	-55.17	-13.00	42.17	Horizontal
2457.00	-44.48	-6.54	-51.02	-13.00	38.02	Horizontal
3276.00	-41.93	-4.95	-46.88	-13.00	33.88	Horizontal
Remark: *The emission levels of below 1 GHz are lower than the limit 20dB and not show in test report.*						

LTE Band 38 part:

Band 38 (5MHz)						
Lowest channel						
Frequency (MHz)	Spurious Emission level (dBm)	Factor (dB)	Level at antenna terminals (dBm)	Limit Line (dBm)	Margin (dB)	Polarization
5145.00	-48.69	4.66	-44.03	-25.00	19.03	Vertical
7717.50	-47.80	13.24	-34.56	-25.00	9.56	Vertical
10290.00	-52.42	18.46	-33.96	-25.00	8.96	Vertical
5145.00	-46.09	4.66	-41.43	-25.00	16.43	Horizontal
7717.50	-50.52	13.24	-37.28	-25.00	12.28	Horizontal
10290.00	-52.14	18.46	-33.68	-25.00	8.68	Horizontal
Middle channel						
Frequency (MHz)	Spurious Emission level (dBm)	Factor (dB)	Level at antenna terminals (dBm)	Limit Line (dBm)	Margin (dB)	Polarization
5190.00	-48.31	4.76	-43.55	-25.00	18.55	Vertical
7785.00	-47.44	13.48	-33.96	-25.00	8.96	Vertical
10380.00	-52.75	17.85	-34.90	-25.00	9.90	Vertical
5190.00	-46.37	4.76	-41.61	-25.00	16.61	Horizontal
7785.00	-50.95	13.48	-37.47	-25.00	12.47	Horizontal
10380.00	-51.94	17.85	-34.09	-25.00	9.09	Horizontal
Highest channel						
Frequency (MHz)	Spurious Emission level (dBm)	Factor (dB)	Level at antenna terminals (dBm)	Limit Line (dBm)	Margin (dB)	Polarization
5235.00	-47.92	4.95	-42.97	-25.00	17.97	Vertical
7852.50	-47.81	13.48	-34.33	-25.00	9.33	Vertical
10470.00	-52.96	18.39	-34.57	-25.00	9.57	Vertical
5235.00	-46.05	4.95	-41.10	-25.00	16.10	Horizontal
7852.50	-51.23	13.48	-37.75	-25.00	12.75	Horizontal
10470.00	-52.44	18.39	-34.05	-25.00	9.05	Horizontal

Remark:

The emission levels of below 1 GHz are lower than the limit 20dB and not show in test report.

Band 38 (20MHz)						
Lowest channel						
Frequency (MHz)	Spurious Emission level (dBm)	Factor (dB)	Level at antenna terminals (dBm)	Limit Line (dBm)	Margin (dB)	Polarization
5160.00	-47.63	4.71	-42.92	-25.00	17.92	Vertical
7740.00	-47.78	13.32	-34.46	-25.00	9.46	Vertical
10320.00	-52.90	18.30	-34.60	-25.00	9.60	Vertical
5160.00	-45.93	4.71	-41.22	-25.00	16.22	Horizontal
7740.00	-50.80	13.32	-37.48	-25.00	12.48	Horizontal
10320.00	-52.87	18.30	-34.57	-25.00	9.57	Horizontal
Middle channel						
Frequency (MHz)	Spurious Emission level (dBm)	Factor (dB)	Level at antenna terminals (dBm)	Limit Line (dBm)	Margin (dB)	Polarization
5190.00	-47.55	4.76	-42.79	-25.00	17.79	Vertical
7785.00	-47.57	13.48	-34.09	-25.00	9.09	Vertical
10380.00	-52.55	17.85	-34.70	-25.00	9.70	Vertical
5190.00	-46.01	4.76	-41.25	-25.00	16.25	Horizontal
7785.00	-51.27	13.48	-37.79	-25.00	12.79	Horizontal
10380.00	-52.58	17.85	-34.73	-25.00	9.73	Horizontal
Highest channel						
Frequency (MHz)	Spurious Emission level (dBm)	Factor (dB)	Level at antenna terminals (dBm)	Limit Line (dBm)	Margin (dB)	Polarization
5220.00	-47.84	4.86	-42.98	-25.00	17.98	Vertical
7830.00	-48.00	13.49	-34.51	-25.00	9.51	Vertical
10440.00	-52.49	18.21	-34.28	-25.00	9.28	Vertical
5220.00	-46.01	4.86	-41.15	-25.00	16.15	Horizontal
7830.00	-51.14	13.49	-37.65	-25.00	12.65	Horizontal
10440.00	-52.27	18.21	-34.06	-25.00	9.06	Horizontal

Remark:

The emission levels of below 1 GHz are lower than the limit 20dB and not show in test report.

LTE Band 41 part:

Band 41 (5MHz)						
Lowest channel						
Frequency (MHz)	Spurious Emission level (dBm)	Factor (dB)	Level at antenna terminals (dBm)	Limit Line (dBm)	Margin (dB)	Polarization
4997.00	-40.02	3.56	-36.46	-25.00	11.46	Vertical
7495.50	-47.60	11.88	-35.72	-25.00	10.72	Vertical
9994.00	-50.79	16.91	-33.88	-25.00	8.88	Vertical
4997.00	-45.45	3.11	-42.34	-25.00	17.34	Horizontal
7495.50	-51.32	10.31	-41.01	-25.00	16.01	Horizontal
9994.00	-51.73	16.59	-35.14	-25.00	10.14	Horizontal
Middle channel						
Frequency (MHz)	Spurious Emission level (dBm)	Factor (dB)	Level at antenna terminals (dBm)	Limit Line (dBm)	Margin (dB)	Polarization
5186.00	-39.96	4.00	-35.96	-25.00	10.96	Vertical
7779.00	-47.96	11.19	-36.77	-25.00	11.77	Vertical
10372.00	-50.56	19.16	-31.40	-25.00	6.40	Vertical
5186.00	-45.04	3.50	-41.54	-25.00	16.54	Horizontal
7779.00	-51.45	10.72	-40.73	-25.00	15.73	Horizontal
10372.00	-51.24	17.88	-33.36	-25.00	8.36	Horizontal
Highest channel						
Frequency (MHz)	Spurious Emission level (dBm)	Factor (dB)	Level at antenna terminals (dBm)	Limit Line (dBm)	Margin (dB)	Polarization
5375.00	-40.12	4.27	-35.85	-25.00	10.85	Vertical
8062.50	-48.39	12.21	-36.18	-25.00	11.18	Vertical
10750.00	-50.28	20.11	-30.17	-25.00	5.17	Vertical
5375.00	-45.11	3.43	-41.68	-25.00	16.68	Horizontal
8062.50	-51.23	12.00	-39.23	-25.00	14.23	Horizontal
10750.00	-51.61	18.90	-32.71	-25.00	7.71	Horizontal

Remark:

The emission levels of below 1 GHz are lower than the limit 20dB and not show in test report.

Band 41 (20MHz)						
Lowest channel						
Frequency (MHz)	Spurious Emission level (dBm)	Factor (dB)	Level at antenna terminals (dBm)	Limit Line (dBm)	Margin (dB)	Polarization
5012.00	-40.25	3.70	-36.55	-25.00	11.55	Vertical
7518.00	-48.14	11.74	-36.40	-25.00	11.40	Vertical
10024.00	-50.05	17.18	-32.87	-25.00	7.87	Vertical
5012.00	-44.79	3.26	-41.53	-25.00	16.53	Horizontal
7518.00	-51.36	10.25	-41.11	-25.00	16.11	Horizontal
10024.00	-51.73	16.69	-35.04	-25.00	10.04	Horizontal
Middle channel						
Frequency (MHz)	Spurious Emission level (dBm)	Factor (dB)	Level at antenna terminals (dBm)	Limit Line (dBm)	Margin (dB)	Polarization
5186.00	-40.19	4.00	-36.19	-25.00	11.19	Vertical
7779.00	-47.83	11.19	-36.64	-25.00	11.64	Vertical
10372.00	-49.84	19.16	-30.68	-25.00	5.68	Vertical
5186.00	-44.77	3.50	-41.27	-25.00	16.27	Horizontal
7779.00	-51.47	10.72	-40.75	-25.00	15.75	Horizontal
10372.00	-51.77	17.88	-33.89	-25.00	8.89	Horizontal
Highest channel						
Frequency (MHz)	Spurious Emission level (dBm)	Factor (dB)	Level at antenna terminals (dBm)	Limit Line (dBm)	Margin (dB)	Polarization
5360.00	-40.28	3.87	-36.41	-25.00	11.41	Vertical
8040.00	-48.31	12.42	-35.89	-25.00	10.89	Vertical
10720.00	-50.30	19.45	-30.85	-25.00	5.85	Vertical
5360.00	-44.81	3.36	-41.45	-25.00	16.45	Horizontal
8040.00	-51.49	11.96	-39.53	-25.00	14.53	Horizontal
10720.00	-51.60	18.93	-32.67	-25.00	7.67	Horizontal

Remark:

The emission levels of below 1 GHz are lower than the limit 20dB and not show in test report.

LTE Band 66 part:

Band 66 (1.4MHz)						
Lowest channel						
Frequency (MHz)	Spurious Emission level (dBm)	Factor (dB)	Level at antenna terminals (dBm)	Limit Line (dBm)	Margin (dB)	Polarization
3421.40	-38.41	-7.52	-45.93	-13.00	32.93	Vertical
5132.10	-50.26	-1.45	-51.71	-13.00	38.71	Vertical
6842.80	-53.64	3.48	-50.16	-13.00	37.16	Vertical
3421.40	-39.51	-7.52	-47.03	-13.00	34.03	Horizontal
5132.10	-50.24	-1.45	-51.69	-13.00	38.69	Horizontal
6842.80	-52.83	3.48	-49.35	-13.00	36.35	Horizontal
Middle channel						
Frequency (MHz)	Spurious Emission level (dBm)	Factor (dB)	Level at antenna terminals (dBm)	Limit Line (dBm)	Margin (dB)	Polarization
3490.00	-38.72	-6.98	-45.70	-13.00	32.70	Vertical
5235.00	-49.84	-0.84	-50.68	-13.00	37.68	Vertical
6980.00	-53.39	3.10	-50.29	-13.00	37.29	Vertical
3490.00	-39.21	-6.98	-46.19	-13.00	33.19	Horizontal
5235.00	-50.60	-0.84	-51.44	-13.00	38.44	Horizontal
6980.00	-53.32	3.10	-50.22	-13.00	37.22	Horizontal
Highest channel						
Frequency (MHz)	Spurious Emission level (dBm)	Factor (dB)	Level at antenna terminals (dBm)	Limit Line (dBm)	Margin (dB)	Polarization
3558.60	-38.38	-6.75	-45.13	-13.00	32.13	Vertical
5337.90	-49.51	-0.37	-49.88	-13.00	36.88	Vertical
7117.20	-53.46	3.51	-49.95	-13.00	36.95	Vertical
3558.60	-39.49	-6.75	-46.24	-13.00	33.24	Horizontal
5337.90	-50.34	-0.37	-50.71	-13.00	37.71	Horizontal
7117.20	-53.41	3.51	-49.90	-13.00	36.90	Horizontal
Remark: *The emission levels of below 1 GHz are lower than the limit 20dB and not show in test report.*						

Band 66 (20MHz)						
Lowest channel						
Frequency (MHz)	Spurious Emission level (dBm)	Factor (dB)	Level at antenna terminals (dBm)	Limit Line (dBm)	Margin (dB)	Polarization
3440.00	-38.00	-7.39	-45.39	-13.00	32.39	Vertical
5160.00	-49.03	-1.22	-50.25	-13.00	37.25	Vertical
6880.00	-53.43	3.66	-49.77	-13.00	36.77	Vertical
3440.00	-39.48	-7.39	-46.87	-13.00	33.87	Horizontal
5160.00	-50.18	-1.22	-51.40	-13.00	38.40	Horizontal
6880.00	-53.39	3.66	-49.73	-13.00	36.73	Horizontal
Middle channel						
Frequency (MHz)	Spurious Emission level (dBm)	Factor (dB)	Level at antenna terminals (dBm)	Limit Line (dBm)	Margin (dB)	Polarization
3490.00	-38.48	-6.98	-45.46	-13.00	32.46	Vertical
5235.00	-49.50	-0.84	-50.34	-13.00	37.34	Vertical
6980.00	-53.13	3.10	-50.03	-13.00	37.03	Vertical
3490.00	-39.26	-6.98	-46.24	-13.00	33.24	Horizontal
5235.00	-50.21	-0.84	-51.05	-13.00	38.05	Horizontal
6980.00	-53.35	3.10	-50.25	-13.00	37.25	Horizontal
Highest channel						
Frequency (MHz)	Spurious Emission level (dBm)	Factor (dB)	Level at antenna terminals (dBm)	Limit Line (dBm)	Margin (dB)	Polarization
3540.00	-38.81	-6.81	-45.62	-13.00	32.62	Vertical
5310.00	-49.96	-0.55	-50.51	-13.00	37.51	Vertical
7080.00	-53.62	3.37	-50.25	-13.00	37.25	Vertical
3540.00	-39.46	-6.81	-46.27	-13.00	33.27	Horizontal
5310.00	-50.14	-0.55	-50.69	-13.00	37.69	Horizontal
7080.00	-53.22	3.37	-49.85	-13.00	36.85	Horizontal

Remark:

The emission levels of below 1 GHz are lower than the limit 20dB and not show in test report.

6.6 Frequency stability V.S. Temperature measurement

Test Requirement:	Part 22.355, Part 24.235, Part 27.54, Part 90.213(a), Part 2.1055(d)(2)
Limit:	±2.5 ppm for Band 5 & 26 Within authorized band for Band 7 & 12 & 13 & 17 & 25 & 41 & 66
Test setup:	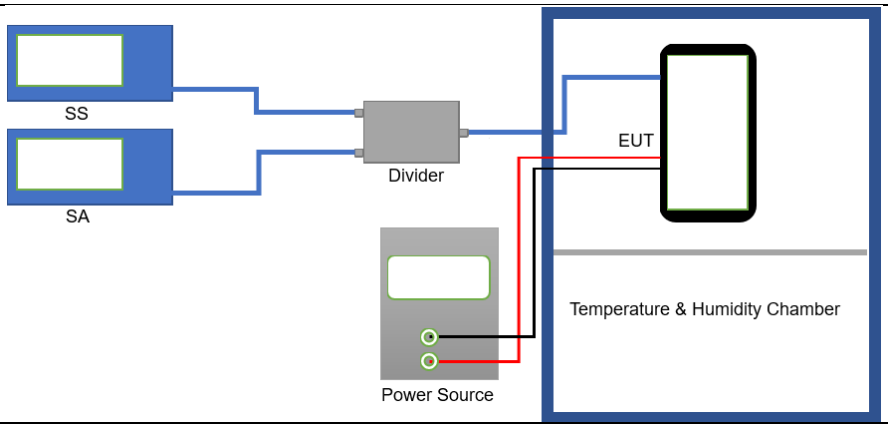
Test procedure:	1. The equipment under test was connected to an external DC power supply and input rated voltage. 2. RF output was connected to a frequency counter or spectrum analyzer via feed through attenuators. 3. The EUT was placed inside the temperature chamber. 4. Set the spectrum analyzer RBW low enough to obtain the desired frequency resolution and measure EUT 25℃ operating frequency as reference frequency. 5. Turn EUT off and set the chamber temperature to –30℃. After the temperature stabilized for approximately 30 minutes recorded the frequency. 6. Repeat step measure with 10℃ increased per stage until the highest temperature of +50℃ reached
Test Instruments:	Refer to section 5.10 for details
Test mode:	Refer to section 5.3 for details
Test results:	Passed
Measurement Data:	Refer to Appendix F – LTE

6.7 Frequency stability V.S. Voltage measurement

Test Requirement:	Part 22.355, Part 24.235, Part 27.54, Part 90.213(a), Part 2.1055(d)(2)
Limit:	±2.5 ppm for Band 5 & 26 Within authorized band for Band 7 & 12 & 13 & 17 & 25 & 41 & 66
Test setup:	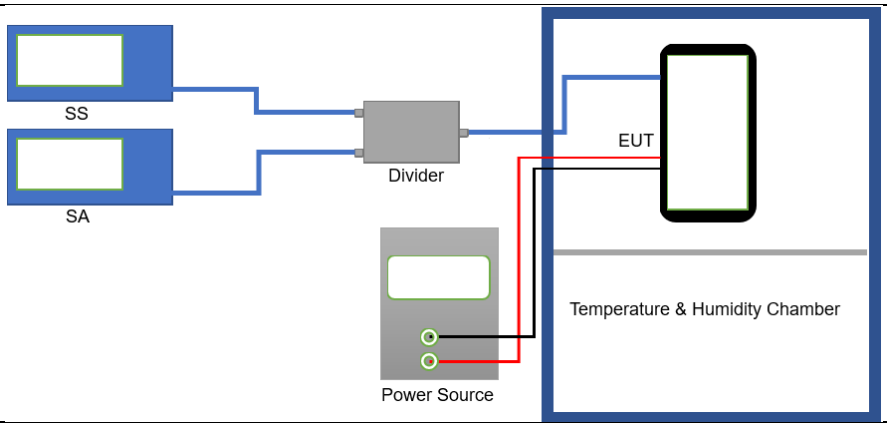
Test procedure:	1. Set chamber temperature to 25℃. Use a variable DC power source to power the EUT and set the voltage to rated voltage. 2. Set the spectrum analyzer RBW low enough to obtain the desired frequency resolution and recorded the frequency. 3. Reduce the input voltage to specify extreme voltage variation (+/-15%) and endpoint, record the maximum frequency change.
Test Instruments:	Refer to section 5.10 for details
Test mode:	Refer to section 5.3 for details
Test results:	Passed
Measurement Data:	Refer to Appendix F – LTE

8 EUT Constructional Details

Reference to the test report No. JYTSZB-R12-2102611.

------End of report------