# BLACK+ DECKER®

INSTRUCTION MANUAL

## Robot Vacuum with Hands-Free Cleaning Technology

**Scan the QR code on top of your robot to access the following features!**

Activate your Warranty,
Watch the setup video,
Get the Black + Decker Home app,
Purchase accessories,
Get support and more!

# BDRV10

**If at any point you are unsatisfied with your product, please consult our customer support line, check warranty information, contact one of our representatives at 1-855-454-8078 or qrco.de/bdsupport**

# TABLE OF CONTENTS


1 - 2 ..... Safety

3 ..... In The Box

4 ..... Product Overview

5 ..... Dustbin Overview

6 ..... Robot Indicators

7 ..... Setting up the Charging Dock

8 ..... Setting Up The Roboseries

9 ..... Using the Black + Decker Home App

10..... Using Your Roboseries

11 ..... Main Brush Maintenance

12 ..... Maintaining the Dustbin and Filters

13 ..... Side Brush and Sensor Maintenance

14 ..... Roboseries Troubleshoot

15 ..... Warranty

## SAFETY DEFINITIONS

⚠ ***WARNING:*** Indicates a hazardous situation that, if not avoided, could result in death or serious injury.

⚠ ***CAUTION:*** Indicates a hazardous situation that, if not avoided, could result in minor or moderate injury.

⚠ ***NOTICE:*** Indicates a hazardous situation that, if not avoided, could result in property damage.

Before using this product, please read the following safety instructions and follow all safety precautions. Any operation inconsistent with this instruction manual may cause damage to this product.

---

⚠ ***WARNING:***

- Your robot is not a toy. Small children and pets should be supervised when your robot is operating.
- Do not sit or stand on your robot.
- Do not use unauthorized chargers. Use of an unauthorized charger could cause the battery to generate heat, smoke, catch fire or explode. Contact customer service for a replacement charger.
- Do not open your robot except as instructed to maintain the dustbin and filter(s). Do not open the charging dock as there are no user serviceable parts inside.
- Risk of electric shock. Only use indoors and in dry locations.
- Do not handle your robot with wet hands.
- Store and operate your robot in room temperature environments only.
- Do not operate the robot in areas with exposed electrical outlets in the floor.
- Do not attempt to open, crush or heat the battery of your robot above 175˚F.
- Do not subject the battery to mechanical shock.
- Do not operate the vacuum without the dustbin installed.
- Do not short circuit the battery of your robot by allowing any metal objects to contact the battery terminal.
- Do not immerse the battery in liquid.
- Do not attempt to charge damaged or leaking battery packs. If battery leakage occurs, thoroughly wash any affected skin, making sure to keep battery acid away from eyes, ears, nose and mouth. Immediately wash any clothing or other surface that comes in contact with leaked battery acid. If a chemical burn occurs or if irritation persists, seek medical attention.Dispose according to Local, State or Federal regulations.

⚠ ***CAUTION:***

- If the robot passes over a power cord there is a chance an object can be pulled off a table. Before using the robot, clear the floor of objects such as clothing, cords for blinds, curtains, power cords and any fragile objects which can be easily damaged.
- Do not use the robot to pick up sharp objects, or anything that is burning or smoking.

***⚠ NOTICE:***

- This robot is intended for dry floor use only. Do not use the robot to pick up any wet spills and do not allow the dustbin contents to become wet.
- Do not place anything on top of your robot
- Regularly wipe charge contacts on your robot and charge dock. Failure to maintain charge contacts could impact the robots ability to properly charge.
- Product may not be used with any type of power converter. Use of power converters will void the warranty.
- The battery pack must be removed from the robot before recycling or disposal.
- Do not use non-rechargeable batteries in your robot. For battery replacement contact customer care.
- Before long term storage of your robot, fully charge and remove the battery.

***⚠ WARNING:***

- Battery acid leakage can cause personal injury and cause damage to the product and surrounding property. If battery leakage occurs, thoroughly wash any affected skin, making sure to keep battery acid away from eyes, ears, nose and mouth. Immediately wash any clothing or other surface that comes in contact with leaked battery acid. If a chemical burn occurs or if irritation persists, seek medical attention.Dispose according to Local, State or Federal regulations.
- Batteries are to be inserted following the polarity markings on the product.
- NEVER mix old and new batteries or different brands of batteries. Replace all batteries at the same time
- NEVER mix alkaline, standard (carbon-zinc), rechargeable (nickel cadmium) batteries with this product
- NEVER dispose of batteries in fire, as they may leak and explode.
- Promptly remove exhausted batteries from product.
- Remove batteries before extended storage.

# IN THE BOX

**1 :** Charging Dock
**2:** Roboseries Vacuum BDRV10
**3:** Charging Adapter
**4:** Sidebrush

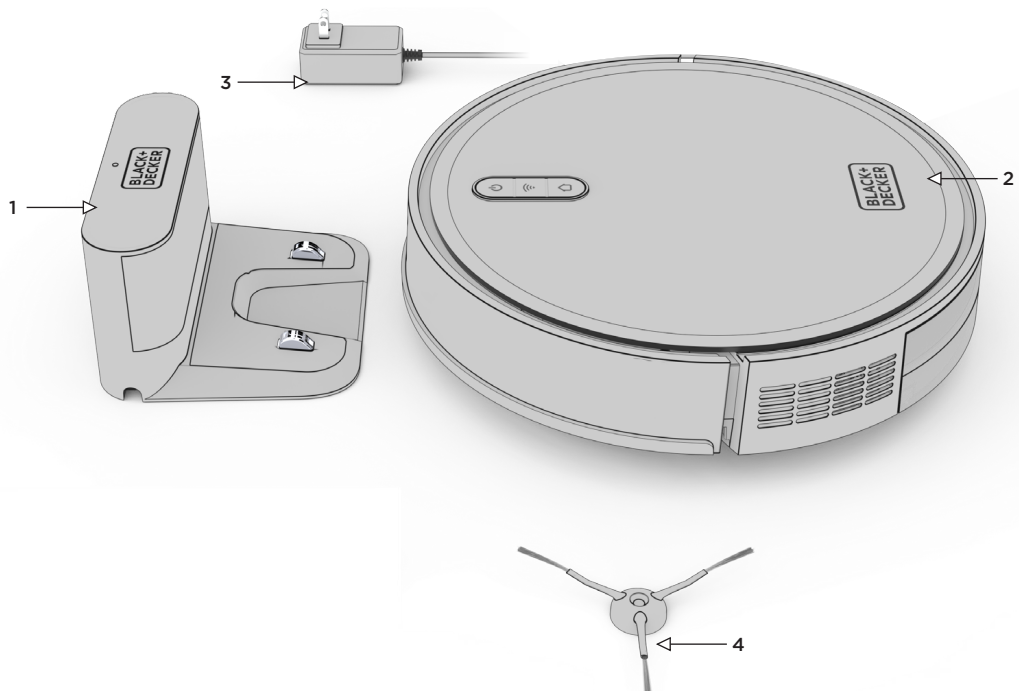

## FRONT

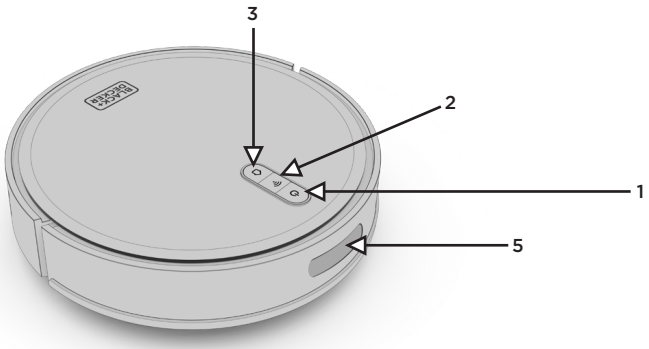


## CHARGING BASE

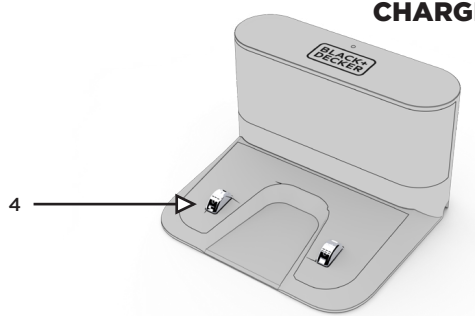


## BACK

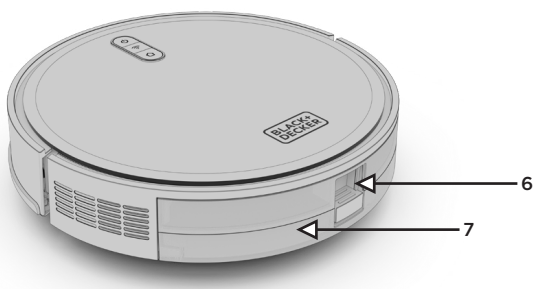


## BOTTOM

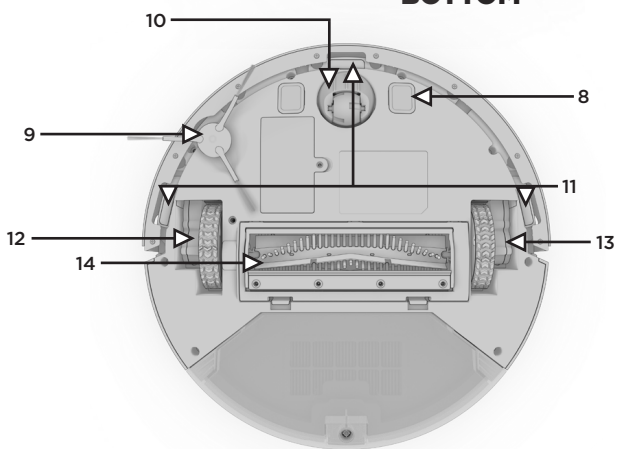


**1 :** Power Button
**2:** WiFi Indicator
**3:** Home Button
**4:** Charging Contacts
**5:** Collision Sensor
**6:** Dustbin Release Latch
**7:** Dustbin
**8:** Charging Contacts
**9:** Side Brush
**10:** Omnidirectional Wheel
**11:** Detection Sensors
**12:** Left Wheel
**13:** Right Wheel
**14:** Main Brush

**1:** Bin/Filter Release Latch

**2:** HEPA Filter

**3:** Screen Filter (Non removable)

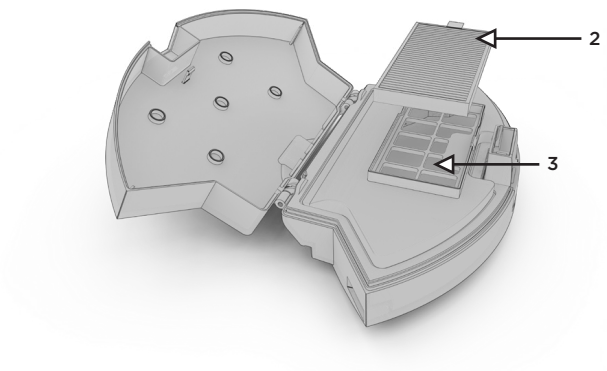

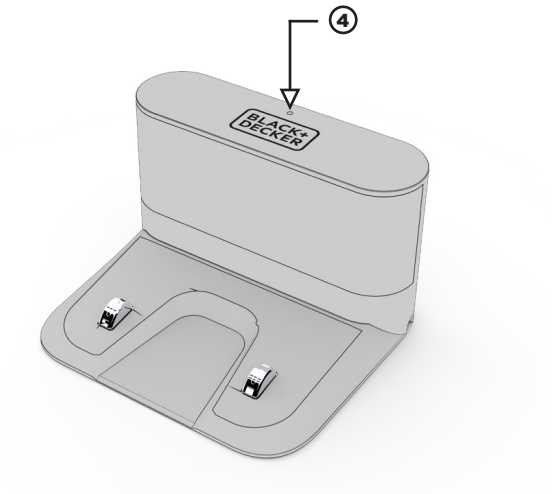


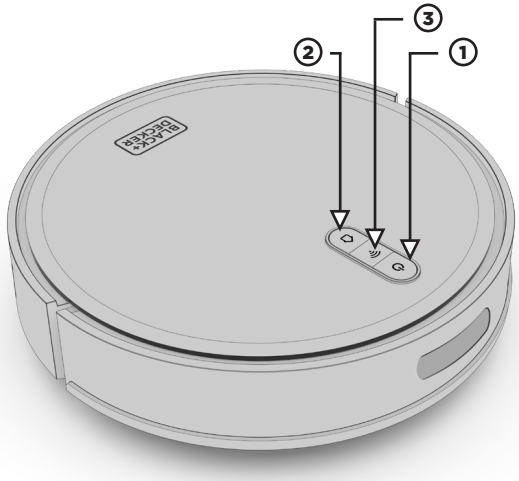


## 1 POWER BUTTON

- Hold to turn on/off
- Press to start/pause cleaning

## 2 HOME BUTTON

- Press to return to charging dock for recharging
- Press and hold to initiate WiFi Setup

## 3 WIFI INDICATOR

## 4 CHARGING DOCK

- LED will remain lit when charging dock is connected to wall power.

## POWER/HOME LED STATES

- Blinking White: Standby Mode
- Solid White (OFF Charge Base): Cleaning
- Solid White (ON Charge Base): Fully Charged
- Breathing White: Charging
- Amber: Error
- Lights off: Off/sleeping

## WIFI INDICATOR STATES

- Blinking White: Network Configuration Mode
- Solid White: Wifi connected
- Light Off: Wifi disconnected / Network configuration failure

# SETTING UP THE CHARGING DOCK

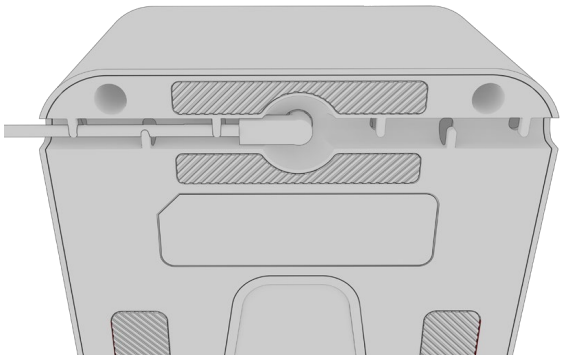

① Plug the power adapter into the port on the bottom of the charging dock and secure the cable into the channel.

② Place the charging dock against the wall in an open & uncluttered area. Leaving at least 5 feet of clearance in front of the charging dock and 2 feet on both sides.

**NOTE:** Clearance around the charging base is necessary to prevent obstructions when the Vacuum returns to charge. Avoid using a power source that may inadvertently be switched off (e.g. power strip, outlet controlled by a light switch, GFCI).

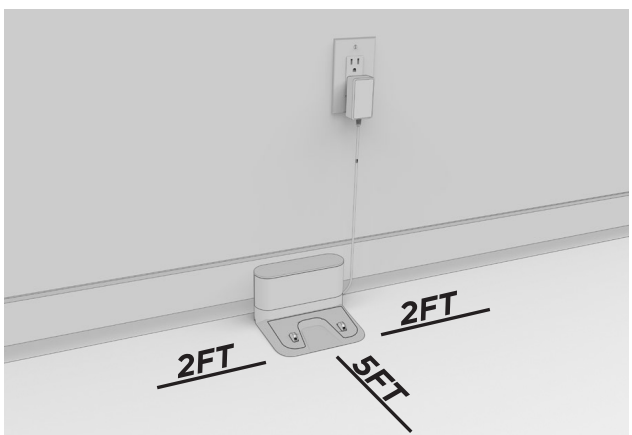

## STEP 1

Remove and discard all foam packing pieces from both sides of the front bumper.

## STEP 2

Install the side brush by pushing firmly down until it clicks into place.

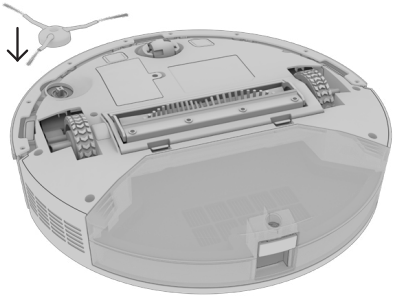

## STEP 3

Position the Vacuum on the floor near the charging dock as shown. To turn the unit on, press and Hold the Power button until the indicator turns white.

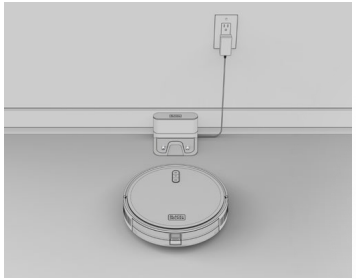

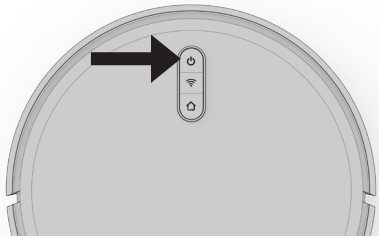

## STEP 4

Press the button to initiate docking. The robot will navigate to the charging base and beep when properly docked.

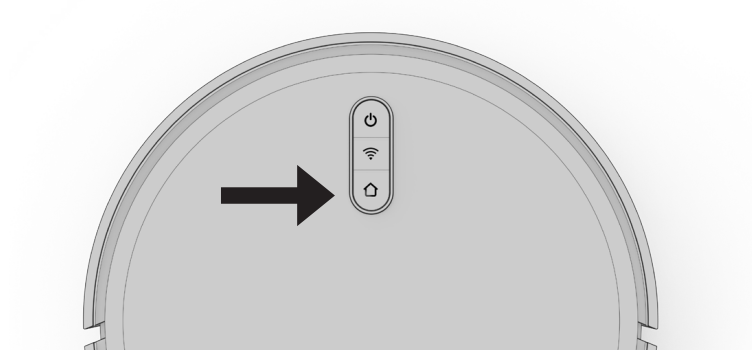

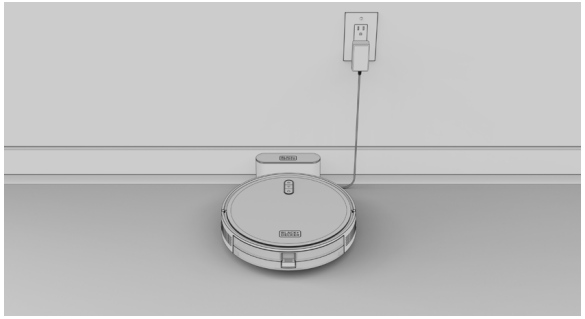

**NOTE:** Allow your Vacuum to fully charge (up to 5 hours) before first use. The indicators on your robot will turn solid white when fully charged.

## DOWNLOAD BLACK + DECKER HOME APP

- Search “Black + Decker Home” in the App Store or use the following QR code:

Download on the App Store

GET IT ON Google Play

**NOTE:** Follow steps in the app to connect your vacuum to WiFi. WiFi connectivity allows you to control your vacuum from anywhere and set automatic cleaning schedules!

---

**The Black + Decker Home app provides an easy step by step guide to get your Vacuum connected to Wi-Fi. Here is a checklist of what you’ll need before getting started:**

- An iPhone (iOS 10 or later) OR Android (4.4 or later).
- Make sure that your phone is connected to your desired Wi-Fi Network. This will be the network that your Roboseries Vacuum connects to.
- Your Wi-Fi network must be a 2.4Ghz network (5Ghz networks are not supported).
- Download and launch the Black + Decker Home app from the app store. Create a user account.
- Follow the steps in the app to add the Vacuum.

Before starting your first cleaning cycle please clear the floor of all objects other than furniture as some small objects may obstruct, get caught in, or damage the Roboseries.

## FIRST CLEANING

Simply press the Power button on your Roboseries to begin an Auto-Clean cycle of your home. The vacuum will start cleaning and will continue until it has covered the entire cleaning area.

## CLEANING MODES

For your convenience, there are several ways to control your vacuum using the buttons on your vacuum or the app. Below is a description of the cleaning modes and the way to initiate them.

**Auto Clean -** automatically clean your floor until it has covered the entire surface. Auto Clean can be initiated with the app or by simply pressing the power button on your robot.

**Spot Clean -** Roboseries will deep clean a specific spot. First, use the manual navigation control to guide your robot to the desired location. Then, select the “Spot Clean” mode via App.

**Edge Clean -** Roboseries will clean along walls. Edge Clean can be initiated with the app.

**Schedule Cleaning -** Use the app to set a specific time for your vacuum to clean your home. Scheduled cleanings can be programmed to repeat on any day of your choosing.

⚠ ***CAUTION:*** Power off the vacuum before performing maintenance.

Your Vacuum is designed to be used regularly. As with most floor care devices, regular use may cause build-up around brushes, in debris compartments and near filters. We recommend performing regular maintenance, as outlined in the following pages, to keep your Roboseries Vacuum running at optimal performance.

**1:** Pinch the left and right tabs on the main brush cover. Lift and remove the cover.
**2:** Remove the main brush and clean.
**3:** Replace the main brush and snap the cover back into place.

**NOTE:** It is recommended to replace the main brush every 6-12 months depending on use.

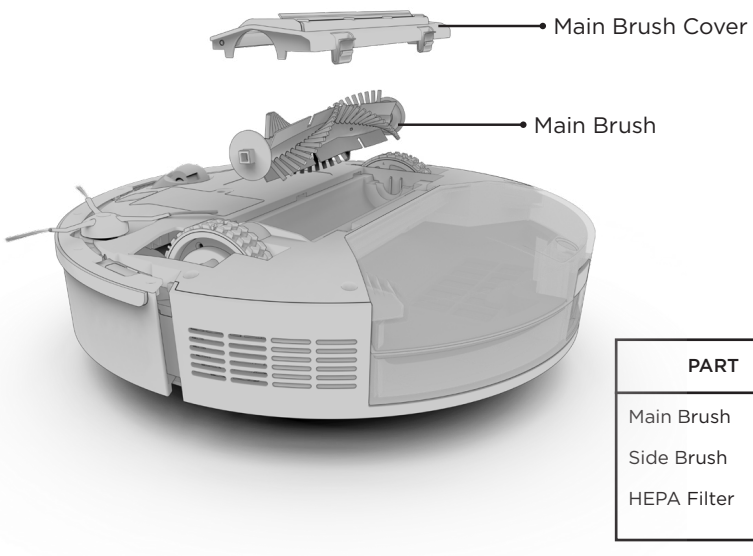


## MAINTENANCE SCHEDULE

| PART | CARE FREQUENCY | REPLACEMENT FREQUENCY |
|---|---|---|
| Main Brush | Once a month | Replace every 6-12 months |
| Side Brush | Once a month | Replace every 6-12 months |
| HEPA Filter | Every 2 Weeks | Replace every 3 months |

1. Press the dustbin release button and remove the dustbin.

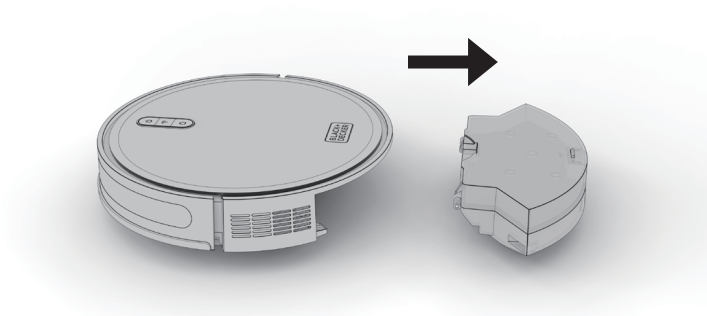

2. Empty the dustbin contents into the trash and wipe the inside thoroughly with a dry cloth.

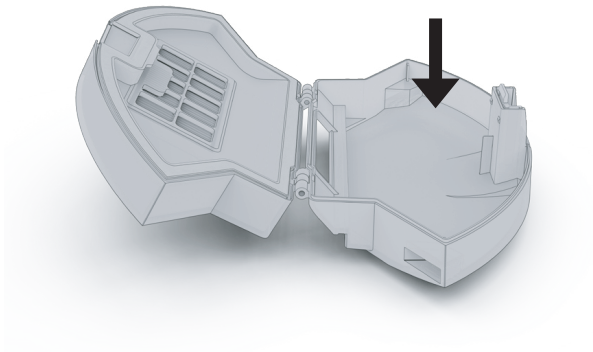

3. To access the HEPA filter pull up on the filter housing tab. Remove the HEPA filter and dislodge any dust or debris. Rinse the primary filter screen with water and wipe dry completely before reassembly.

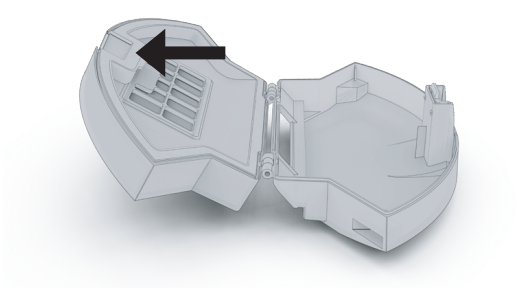

4. Remove the HEPA filter, wipe down the surface with a dry cloth. Rinse the primary filter with water and let dry completely before using.

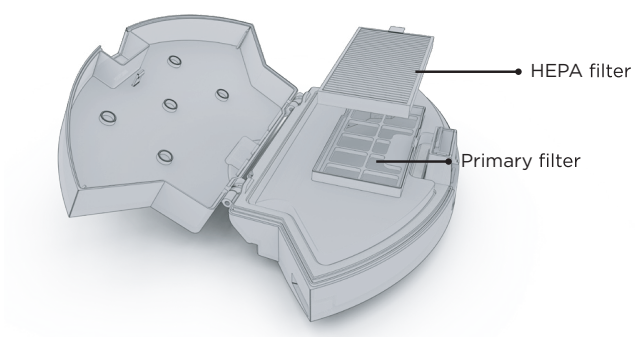

**1:** Pop off the side brush by pulling it upward.

**2:** Remove dirt and debris and reinstall by pushing down in place.

**3:** It is recommended to wipe dust from the charging pins on your robot and charge dock regularly.

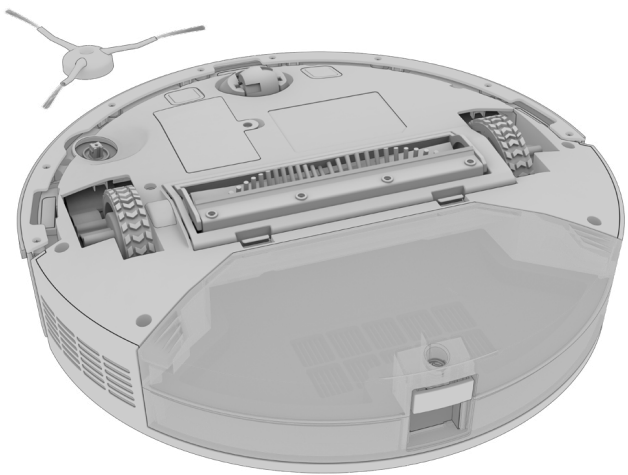

**NOTE:** It is recommended to replace the side brush every 6-12 months depending on use.

| PROBLEM | SOLUTION |
|---|---|
| Unable to power on | Please charge before use. This is commonly caused due to low battery. |
| Unable to start cleaning | Please charge before use. This is commonly caused due to low battery. |
| Unable to return to charging dock | • There are too many obstacles near the charging dock. Please make sure there is a clear area 2 FT of space on either side and 5 FT in front of the charging dock.<br>• Vacuum is out of range of the charging dock. Move the Vacuum closer to the charging dock to re-establish connection. |
| Abnormal behavior | Please make sure the areas to be cleaned are well illuminated. Clean the lens with a clean soft cloth, and make sure the sensor is not blocked. Avoid using any detergent or cleaning spray while cleaning. |
| Abnormal noise during cleaning | Main brush, side brush or left/right wheel may be obstructed, Check underneath the Vacuum to make sure it is clear from any obstruction. If there is an obstruction clear it and restart the Vacuum. |
| Decrease in cleaning ability or dust falling out from dustbin | • The dustbin is full, please empty the dustbin.<br>• Check and clean the HEPA filter.<br>• Check that the brush is clear from obstruction. |
| Unable to connect to Wi-Fi | Wi-Fi signal is not good , please check that there is a strong Wi-Fi connection while paring. Make sure the network is 2.4G and not 5G or dual band. |
| Vacuum is not returning to the charging dock after spot cleaning or after moving it far from the charging dock | If the Vacuum is far from the charging dock it may not be able to locate it. Please manually dock the Vacuum to the charging dock to recharge. |
| Unable to charge after docking | Make sure there is no obstruction or heavy dust on both the Vacuum and charging dock charging contacts. |
| Scheduled cleaning not working | Please confirm that the Vacuum is connected to your Wi-Fi network. If the Vacuum is not connected to the network you cannot synchronize the scheduled cleaning task. |

The One (1) Year Limited Warranty applies to purchases made from authorized retailers of Silver Point Innovations LLC. Warranty coverage applies to the original owner and to the original product only and is not transferable. We recommend registering your product online at **www.blackanddecker.com**

SilverPoint warrants this product to be free from defects in workmanship and materials, under normal household use and conditions, one (1) year from the date of original purchase and maintained according to the requirements outlined in this User Manual. Should this product fail to function in a satisfactory manner, it is best to contact our customer service team at (855) 454-8078 so that we may help resolve the matter. Should service be required by reason of any defect or malfunction during the warranty period, SilverPoint will repair or, at its discretion, replace the product.

The One (1) Year Limited Warranty is subject to the following conditions and exclusions:

The original unit and/or non-wearable parts deemed defective, in SilverPoint's sole discretion, will be repaired or replaced up to one (1) year from the original purchase date. In the event a replacement unit is issued the replacement product will be warranted for the remainder of the original warranty period or thirty (30) days from the date of shipment of the replacement product, whichever is longer. SilverPoint reserves the right to use new, refurbished or used parts in good working condition to repair or replace any product.

### Exclusions:

(1) Normal wear and tear of wearable parts (such as batteries, brushes, HEPA filters, pads, etc.), which require regular maintenance and/or replacement to ensure the proper functioning of your unit, are not covered by this warranty. Replacement parts are available for purchase at **www.blackanddecker.com**

(2) Any unit that has been tampered with or used for commercial purposes.

(3) Damage caused by misuse, abuse, negligent handling, failure to perform regular maintenance (i.e., not cleaning the filters), or damage due to mishandling in transit.

(4) Consequential and incidental damages.

(5) Defects caused by repair persons not authorized by SilverPoint.

(6) Products purchased, used, or operated outside of North America.

### Warranty Support:

You must call (855) 454-8078 to initiate a warranty claim and have the product on hand during the call. You will need the original receipt as proof of purchase.

The One (1) Year Limited Warranty does not cover the cost of shipping this product to our service center or its return to the owner. Please call Customer Service at (855) 454-8078 to evaluate your product and receive warranty term instructions.

Disclaimer: This warranty is valid only in the United States of America and does not extend to owners of the product other than to the original purchaser. In no event will SilverPoint or any of its affiliates, contractors, resellers, their officers, directors, shareholders, members or agents be liable to you or any third party for any consequential or incidental damages, any lost profits, actual, exemplary or punitive damages. (Some states do not allow limitations on implied warranties or exclusion of consequential damages, so these restrictions may not apply to you.) This warranty gives you specific legal rights, and you may also have other rights which vary from state to state. Your acknowledgement and agreement to fully and completely abide by this disclaimer of warranty is contractually binding to you upon your transfer of currency (money order, cashier's check, or credit card) for purchase of your SilverPoint product.

Trademark Acknowledgement
BLACK+DECKER Logo are registered trademarks of The Black & Decker Corporation and are used under license.

© 2021 BLACK+DECKER
U.S.& Canada Only
Manufactured by: Silver Point Innovations LLC

This equipment has been tested and found to comply with the limits for a Class B digital device, pursuant to part 15 of the FCC Rules. These limits are designed to provide reasonable protection against harmful interference in a residential installation. This equipment generates, uses and can radiate radio frequency energy and, if not installed and used in accordance with the instructions, may cause harmful interference to radio communications. However, there is no guarantee that interference will not occur in a particular installation. If this equipment does cause harmful interference to radio or television reception, which can be determined by turning the equipment off and on, the user is encouraged to try to correct the interference by

one or more of the following measures:

•Reorient or relocate the receivingantenna.
•Increase the separation between the equipment and receiver.
•Connect the equipment into an outlet on a circuit different from that to which the receiver is connected.
•Consultthedealeroranexperiencedradio/TVtechnicianforhelp.

Caution: Any changes or modifications to this device not explicitly approved by manufacturer could void your authority to operate this equipment.
This device complies with part 15 of the FCC Rules. Operation is subject to the following two
conditions:
(1) This device may not cause harmful interference, and
(2) this device must accept any interference received, including interference that may cause undesired operation.

## RF Exposure Information

This equipment complies with FCC radiation exposure limits set forth for an uncontrolled environment.
This equipment should be installed and operated with minimum distance 20cm between the radiator and your body.