# 3.2 x 1.6 x 0.5(mm) WiFi/Bluetooth Ceramic Chip Antenna (YF300K) Engineering Specification

## 1. Product Number

| YF | 3216 | F8 | R | 2G4502 |
|---|---|---|---|---|
| 1 | 2 | 3 | 4 | 5 |

| | |
|---|---|
| (1)Product Type | Chip Antenna |
| (2)Size Code | 3.6x1.2x0.5mm |
| (3)Type Code | F8 |
| (4)Packing | Paper bag packaging |
| (5)Frequency | 2.45GHz |

## 2. Features

*Stable and reliable in performances
*Low temperature coefficient of frequency
*Low profile, compact size
*RoHS compliance
*SMT processes compatible

## 3. Applications

*Bluetooth earphone systems
*Hand-held devices when WiFi /Bluetooth functions are needed, e.g., Smart phone.
*IEEE802.11 b/g/n
*ZigBee
*Wireless PCMCIA cards or USB dongle

## 4. Description

Ying feng chip antenna series are specially designed for WiFi/Bluetooth applications. Based on yingfeng proprietary design and processes, this chip antenna has excellent stability and sensitivity to consistently provide high signal reception efficiency.

## 5. Electrical Specifications (40 x 40 $mm^2$ ground plane)

5-1. Electrical Table

| Characteristics | | Specifications | Unit |
|---|---|---|---|
| Outline Dimensions | | 3.2x1.6x0.5 | mm |
| Working Frequency | | 2400~2500 | MHz |
| VSWR | | 2 Max. | |
| Impedance | | 50 | Ω |
| Polarization | | Linear Polarization | |
| Gain | Peak | 2 (typical) | dBi |
| | Efficiency | 73 (typical) | % |

迎丰天线技术

## 5-2. Return Loss & VSWR

Return Loss ($S_{11}$)

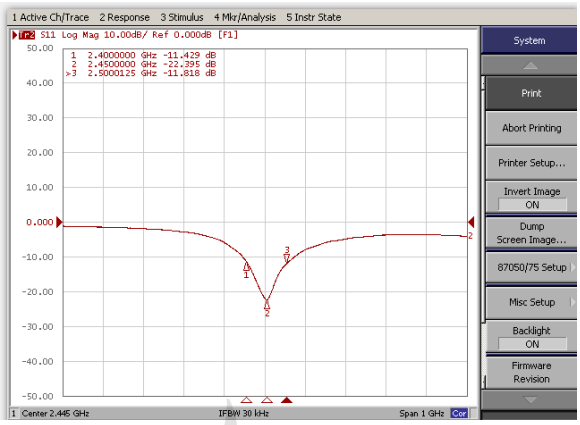


Smith Chart($S_{11}$)

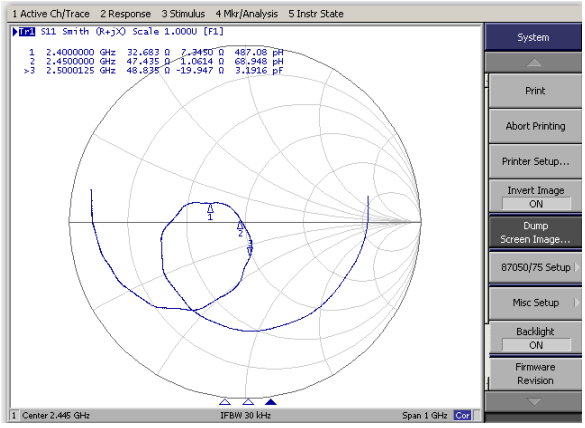


# 6 Outline Dimensions of Antenna & Evaluation Board (unit: mm)

## 6-1. Antenna Dimensions

Configuration and Dimensions:

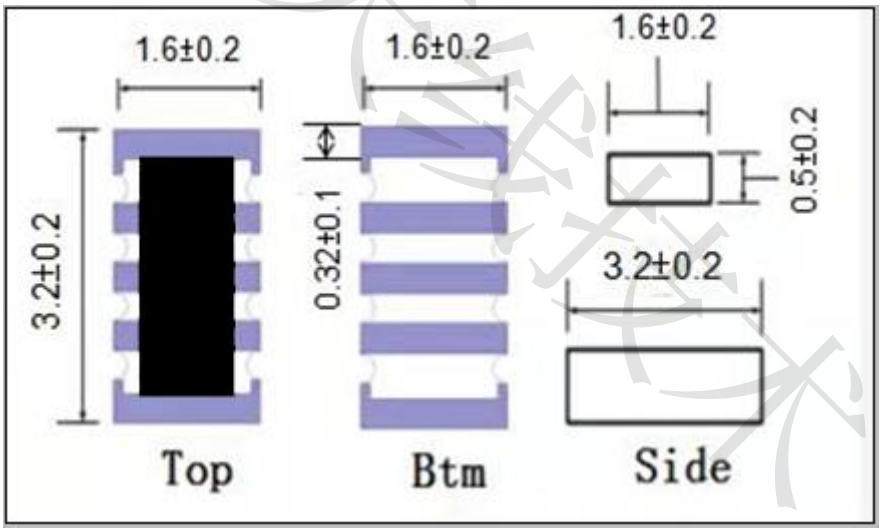

### 6-2-2. **Matching Circuit:**

With the following recommended values of matching and tuning components, the center frequencies will be about 2450 MHz at our standard 40x40 $mm^2$ evaluation board. However, these are reference values, may need to be changed when the circuit boards or part vendors are different.

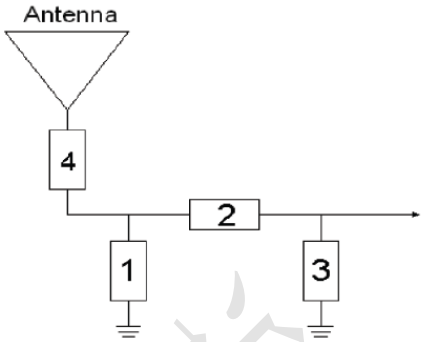


| System Matching Circuit Component | | |
|---|---|---|
| Location | Description | Vendor |
| 1 | N/A* | - |
| 2 | 3.3nH, (0402) | DARFON |
| 3 | 1.5pF, (0402) | MURATA |
| 4 | 0Ω, (0402) | - |

## Evaluation Board Reference

**PCB Dimension & Antenna Layout Reference**

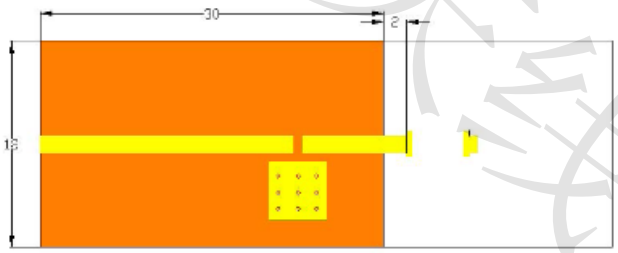

unit :mm

迎丰天线技术

## 7.Radiation Pattern (40x 40 mm$^2$ ground plane)

### 7-1. 3D Gain Pattern @ 2450 MHz

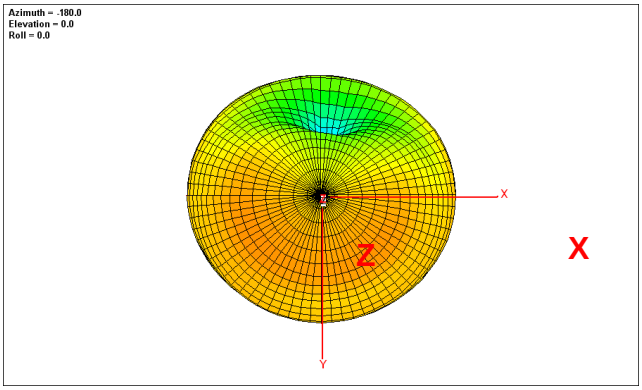


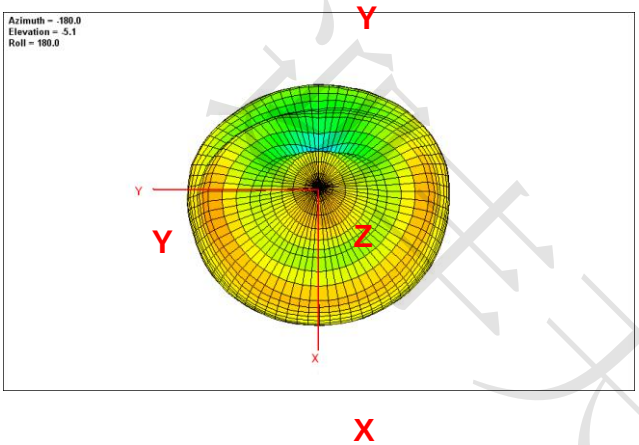


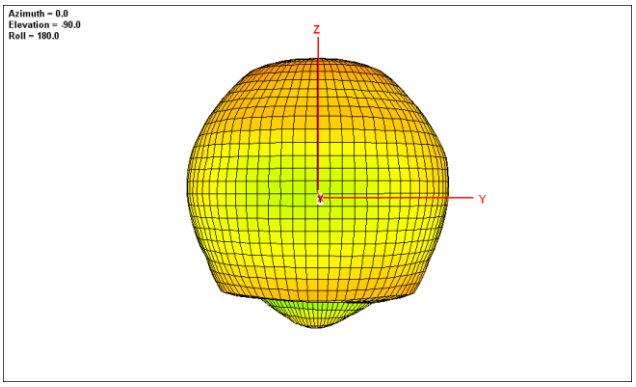


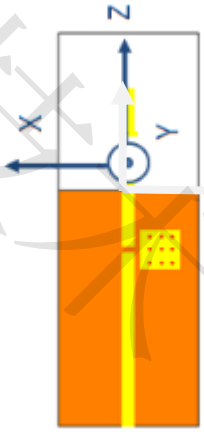


迎丰天线技术

## 8. Radiation Pattern (On 100x55 mm ground plane)

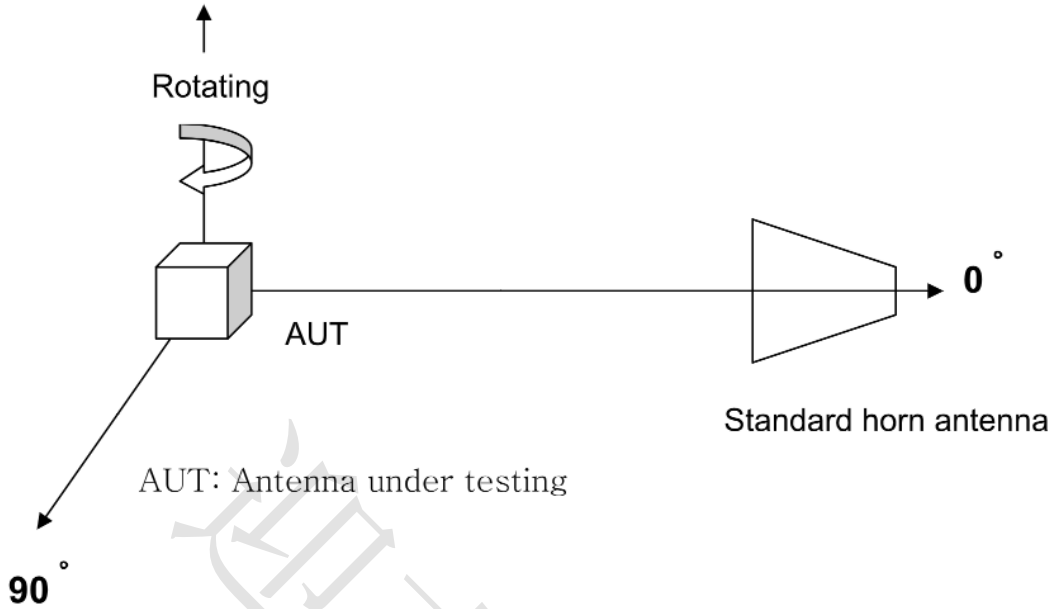


**a.** Type A

**a.** Type A

**XZ**

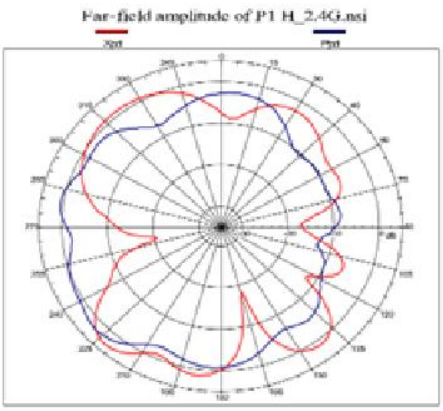


迎丰天线技术

**YZ**

Far-field amplitude of P1 E_2.4G02.nsi

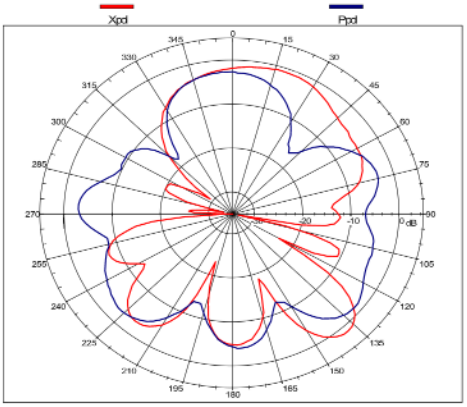


**XY**

Far-field amplitude of P1 E1_2.4G.nsi

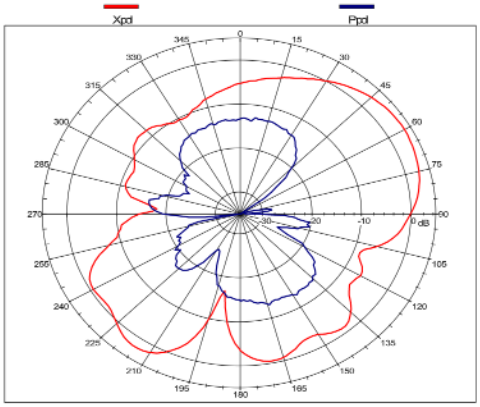


Source signal: Linearly polarized signal $f_0$= 2450 MHz

迎丰天线技术

## Taping Specifications

### Reel

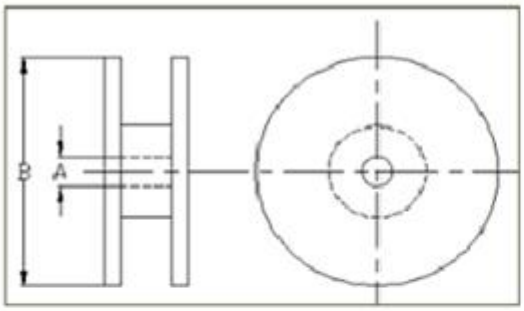


| Checking note | Index | Spec (mm) |
|---|---|---|
| Internal diameter of reel | A | 60.20 ± 0.50 |
| External diameter of reel | B | 178 ± 1.00 |

| | |
|---|---|
| Quantity/per reel | 5000pcs |
| Tape material | Plastic (embossed) |

### Taping Blister Tape

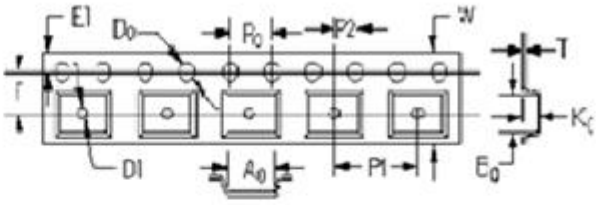


| Checking note | Index | Spec (mm) |
|---|---|---|
| Sprocket hole | D0 | 1.50 +0.10/-0.00 |
| Distance sprocket hole to outside | E1 | 1.75 ± 0.10 |
| Distance sprocket hole to pocket | F | 5.50 ± 0.05 |
| Distance sprocket hole to sprocket hole | P0 | 4.00 ± 0.10 |
| Distance pocket to pocket | P1 | 4.00 ± 0.10 |
| Distance sprocket hole to pocket | P2 | 2.00 ± 0.05 |
| Tape width | W | 12.00 +0.30/-0.10 |
| Pocket width nominal clearance | A0 | 2.28 ± 0.13 |
| Pocket length nominal clearance | B0 | 5.70 ± 0.13 |
| Pocket depth minimum clearance | K0 | 1.58 ± 0.10 |
| Thickness of tape | T | 0.23 ± 0.02 |

## Reliability Table

| Test Item | Procedure | Requirements Ceramic Type | Remark (Reference) |
|---|---|---|---|
| Electrical Characterization | | Fulfill the electrical specification | User Spec. |
| Thermal Shock | 1. Preconditioning:<br>50 ± 10℃ / 1 hr , then keep for 24 ± 1 hrs at room temp.<br>2. Initial measure: Spec: refer Initial spec.<br>3. Rapid change of temperature test:<br>-30℃ to +85℃; 100 cycles;<br>15 minutes at Lower category temperature;<br>15 minutes at Upper category temperature. | No Visible Damage.<br>Fulfill the electrical specification. | MIL-STD-202<br>107 |
| Temperature Cycling | 1. Initial measure: Spec: refer Initial spec.<br>2. 100 Cycles (-30℃ to +85℃), Soak Mode=1 (2 Cycle/hours).<br>3. Measurement at 24 ± 2Hours after test condition. | No Visible Damage.<br>Fulfill the electrical specification. | JESD22<br>JA104 |
| High Temperature Exposure | 1. Initial measure: Spec: refer Initial spec.<br>2. Unpowered; 500hours @ T=+85℃.<br>3. Measurement at 24 ± 2 hours after test. | No Visible Damage.<br>Fulfill the electrical specification. | MIL-STD-202<br>108 |
| Low Temperature Storage | 1. Initial measure: Spec: refer Initial spec.<br>2. Unpowered: 500hours @ T= -30℃.<br>3. Measurement at 24 ± 2 hours after test. | No Visible Damage.<br>Fulfill the electrical specification. | MIL-STD-202<br>108 |
| Solderability (SMD Bottom Side) | Dipping method:<br>a. Temperature: 235 ± 5°C<br>b. Dipping time: 3 ± 0.5s | The solder should cover over 95% of the critical area of bottom side. | IEC 60384-21/22<br>4.10 |
| Soldering Heat Resistance (RSH) | Preheating temperature: 150 ± 10°C.<br>Preheating time: 1~2 min.<br>Solder temperature: 260 ± 5°C.<br>Dipping time: 5 ± 0.5s | No Visible Damage. | IEC 60384-21/22<br>4.10 |
| Vibration | 5g's for 20 min., 12 cycles each of 3 orientations<br>Note: Use 8"X5" PCB .031" thick 7 secure points on, one long side and 2 secure points at corners of opposite sides. Parts mounted within 2" from any secure point. Test from 10-2000 Hz. | No Visible Damage. | MIL-STD-202<br>Method 204 |
| Mechanical Shock | Three shocks in each direction shall be applied along the three mutually perpendicular axes of the test specimen (18 shocks)<br>Peak value: 1,500g's<br>Duration: 0.5ms<br>Velocity change: 15.4 ft/s<br>Waveform: Half-sine | No Visible Damage. | MIL-STD-202<br>Method 213 |
| Humidity Bias | 1. Humidity: 85% R.H., Temperature: 85 ± 2 °C.<br>2. Time: 500 ± 24 hours.<br>3. Measurement at 24 ± 2hrs after test condition. | No Visible Damage.<br>Fulfill the electrical specification. | MIL-STD-202<br>Method 106 |

| | | | |
|---|---|---|---|
| **Board Flex (SMD)** | 1. Mounting method:<br>IR-Reflow. PCB Size (L:100 × W:40 × T:1.6mm)<br>2. Apply the load in direction of the arrow until bending reaches 2 mm.<br> 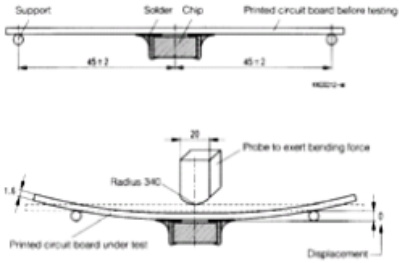 <br> | No Visible Damage. | AEC-Q200<br>005 |
| **Adhesion** | Force of 1.8Kg for 60 seconds.<br> 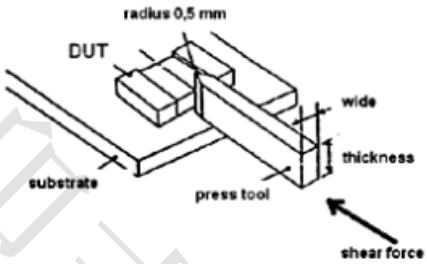 <br> | No Visible Damage<br>Magnification of 20X or greater may be employed for inspection of the mechanical integrity of the device body terminals and body/terminal junction. | AEC-Q200<br>006 |
| **Physical Dimension** | Any applicable method using x10 magnification, micrometers, calipers, gauges, contour projectors, or other measuring equipment, capable of determining the actual specimen dimensions. | In accordance with specification. | JESD22<br>JB100 |

深圳市迎丰天线技术