AiYiN

Instruction Manual

Thermal Receipt Printer

AN581 series

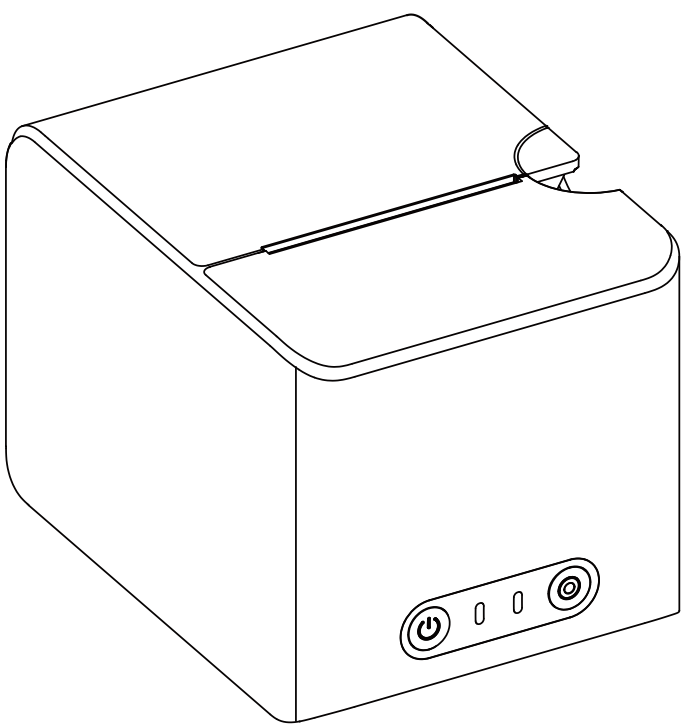

Version:1.0

Table of Content

1.Packing List 1

2.Appearance and Components 2

3.Instruction for Product Usage 3

4.Preparation 4

5.Bluetooth Connection 7

6.Papaer Installation 8

7.Printer Cleaning 10

8.Technical Specification 11

9.Warranty 12

Preface

This manual contains instructions for product usage and installation. Please read it carefully before using the product.

WARNING:
Operation of this equipment in a residential environment may cause radio interference.

NOTICE!
The printer cutter blade has sharp edage, please be careful to prevent accidental cuts.

NOTICE!
After printing, please do not touch the overheated print head directly to prevent burns.

1. Packing List

After unpacking the box, please check whether the appearance of the product is intact and count all accessories. If there is any defect,please contact the dealer!

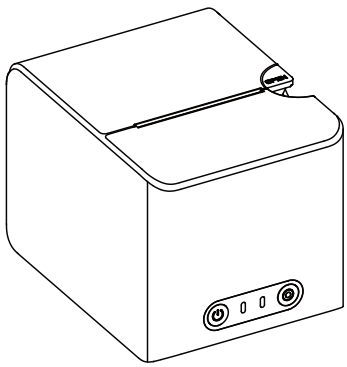

Printer

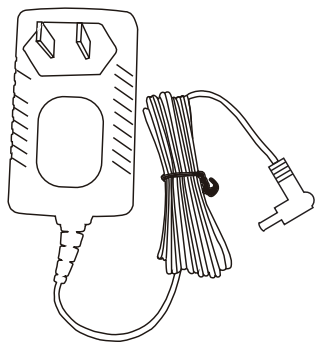

Power Adaptor

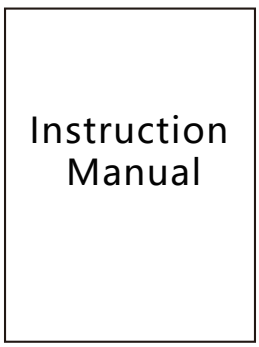

Instruction Manual
(Warranty card included)

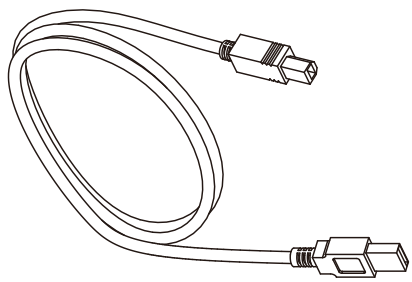

USB Cable

NOTE:
Due to continuous product improvement, the model specifications, accessories and procedures described in the manual are based on the actual machine and are subject to change without prior notice.

2. Appearance and Components

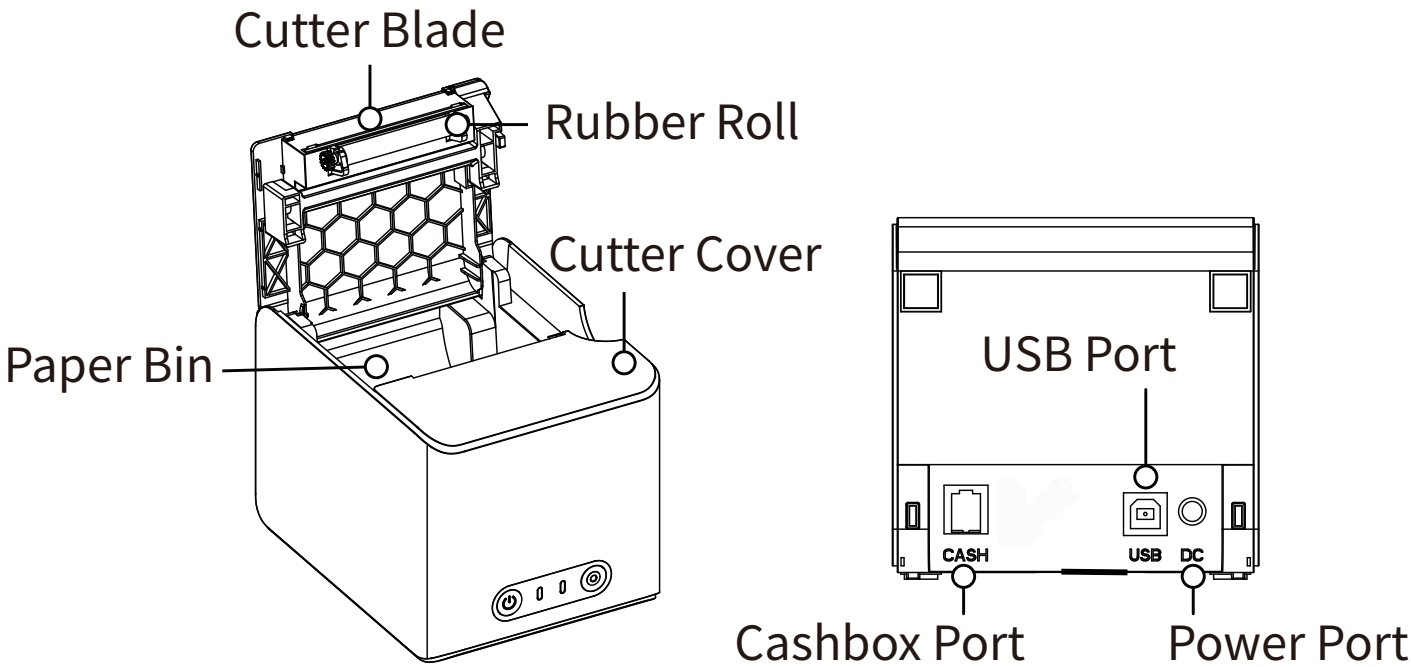

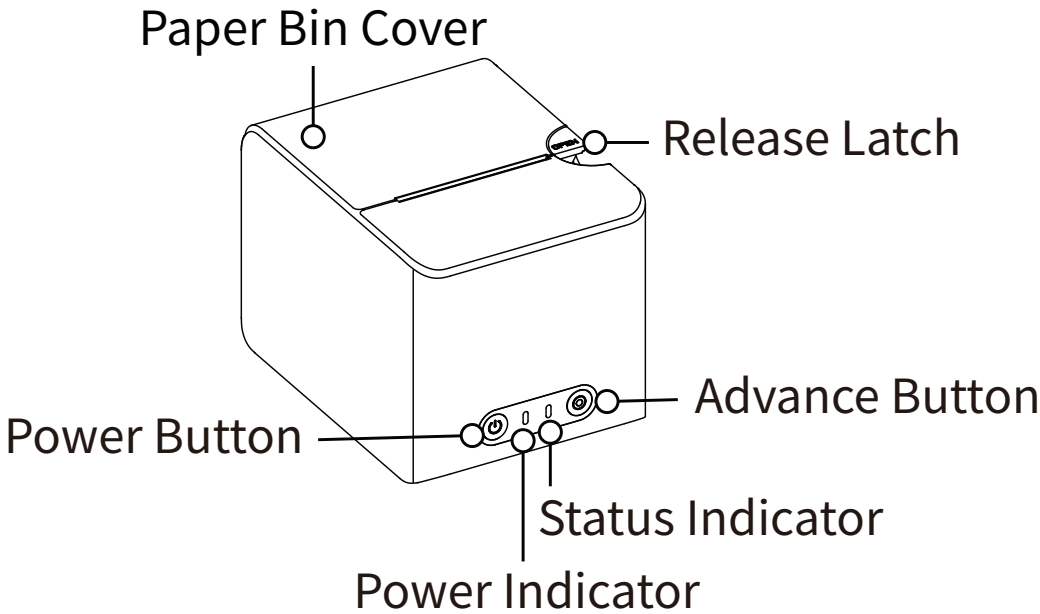

NOTE: Fixed cutter only for models with cutter.

3. Instruction for Product Usage

3.1 Instructions for power switch operation

Power on: In the off state, press and hold the power switch until the blue light flashes and the printer turns on.

Power off: In the on state, press and hold the power switch until the blue light goes out and the printer shuts down.

3.2 Instructions for paper feed key operation

Press the paper feed button once to feed the paper;

Press and hold the paper feed button to feed paper continuously. After reaching a certain length, paper will no longer be fed.

3.3 Introductions for indicator light status

Indicator	State	Status Description	Troubleshooting
Bluetooth Indcator (Blue)	Flashing	Not Connected	Connect Bluetooth
	Steady On	Connected	
Status Indicator (Green)	Three Flashes	Paper Out	Check if the paper is loaded correctly
	Five Flashes	Print head overheated	Wait for cooling down
	Six Flashes	Printer Cover Opening	Close the cover
	Go Out	Normal	

4. Preparation

1. Connect the power supply (make sure the printer is turned off)
Step 1: Plug one end of the power adapter into the printer's power interface, and connect the other end of the power cord to the socket;

Step 2: Plug one end of the USB data cable into the printer's USB interface, and connect the other end to the computer.

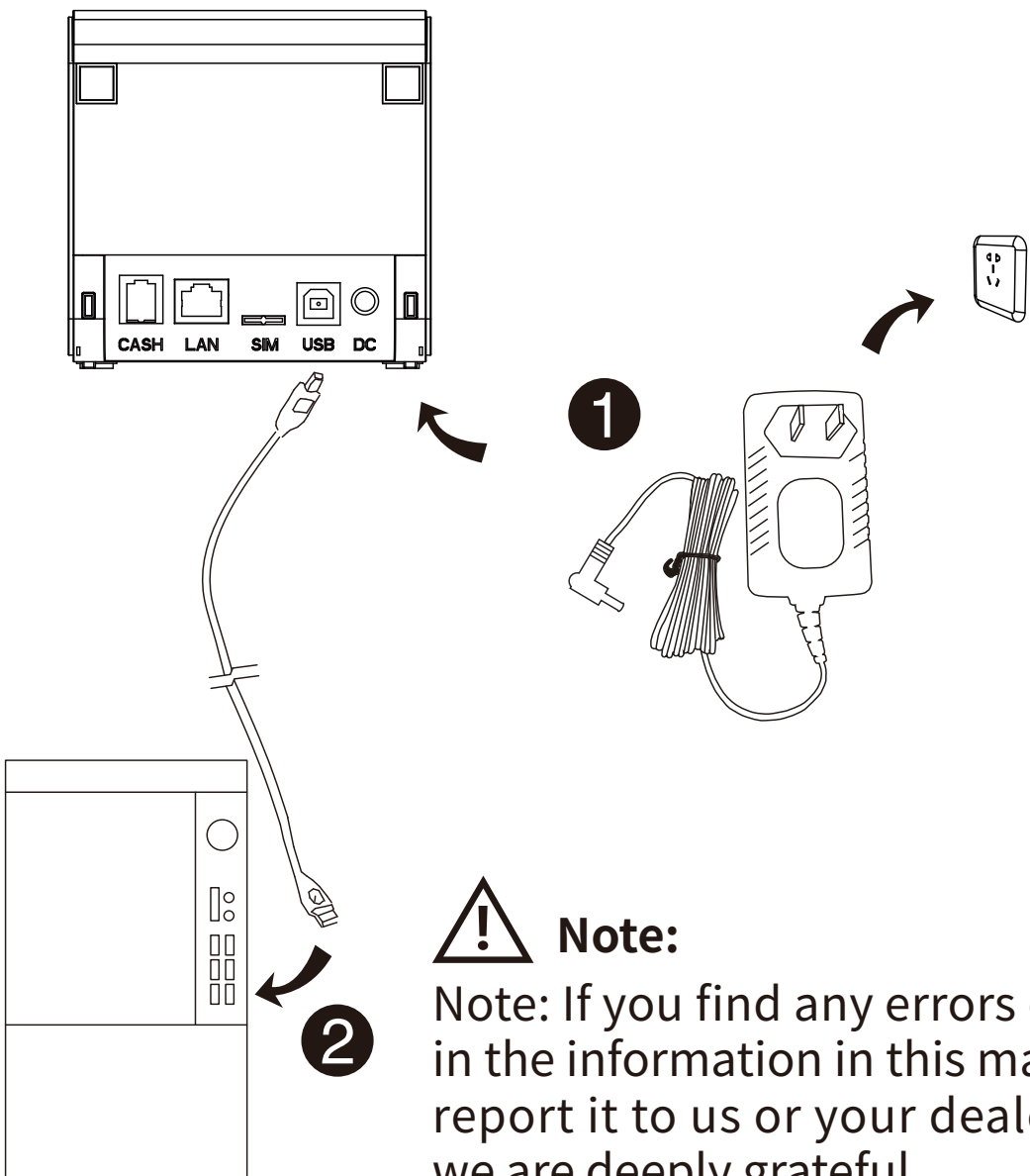

Note:

Note: If you find any errors or omissions in the information in this manual, please report it to us or your dealer, for which we are deeply grateful.

4. Preparation

2.Please go to the official website http://www.qrprt.com, select the driver to download under the technology and support page, save the compressed package locally and unzip it, double-click the driver and the following will appear. Tip, please follow the prompts to turn on the printer and connect the printer to the computer.

3.After the connection is completed, click "OK", then click "Install" in the picture below. Wait for a while, and the driver installation is completed.

4. Preparation

4.Click "Advanced" in the printer's "Printing Preferences" page to select paper specifications, such as shown below:

5.Click "Print Test Page" in the "Printer Properties" page of the printer. If it can be printed and positioned normally, the printer driver has been installed correctly.

5. Bluetooth Connection

1.For mobile phones of Android

Step 1: Turn on the printer

Step 2: Search device in Bluetooth interface, select the printerand connect. The original password is 0000 or 1234. When the Bluetooth pairing done.

Step 3: Open the APP, link the printer and print.

2.For mobile phones of iOS

Step 1: Turn on the printer and Bluetooth.

Step 2: Open the APP, link the printer and print.

NOTE：

1.It supports the devices with Bluetooth.

2.Make sure Bluetooth is on when you process the connection.

3.IOS devices can use APP or mini program to connect without PIN code matching.

6. Papaer Installation

1.Facing the front of the machine, turn the cover opening knob upward to open the paper compartment cover.

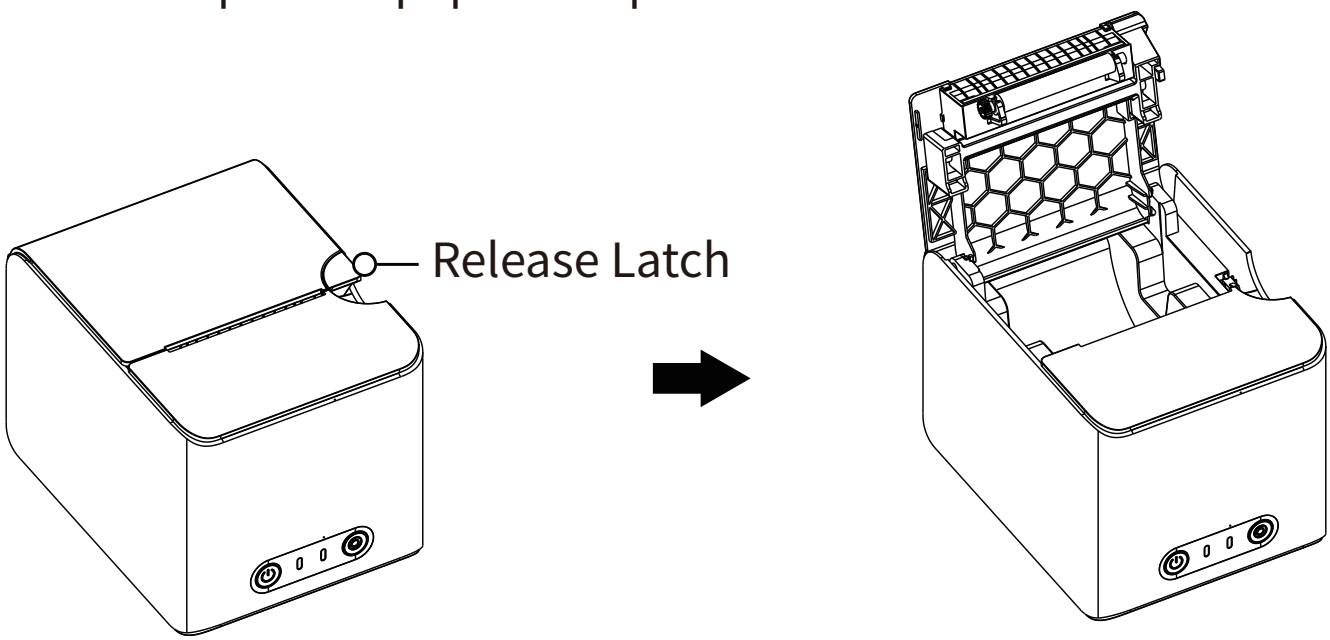

2.After opening the paper compartment cover, put the paper roll into the paper compartment (pay attention to the direction of the paper roll).

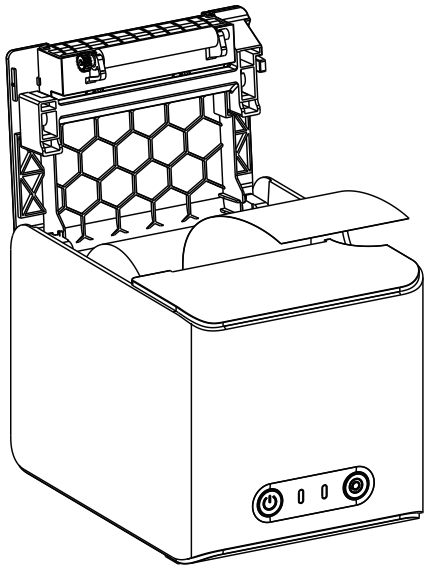

Correct

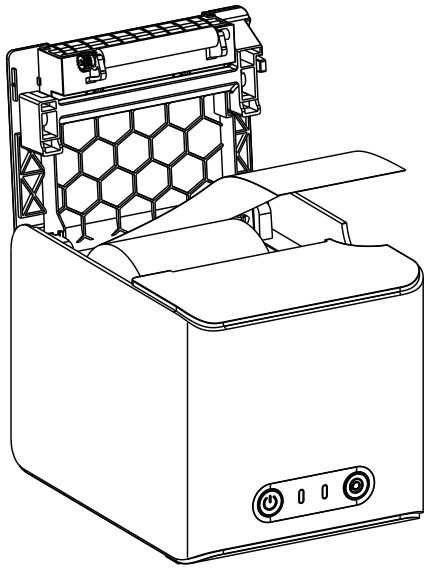

Wrong

6. Papaer Installation

3.After pulling out the paper roll for a while, press the paper bin cover down and close it.

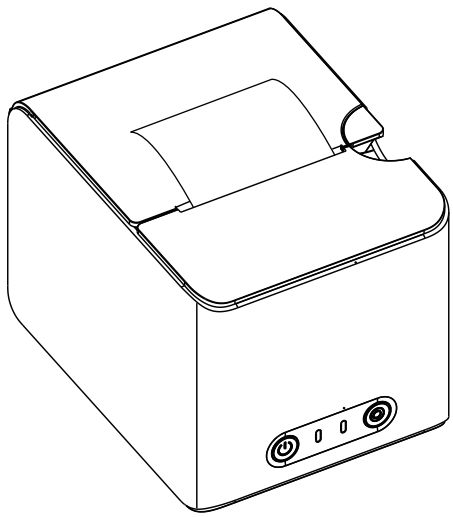

7. Printer Cleaning

Matters needing attention:

1) Turn off the power supply of the printer before cleaning.
2) The print head gets very hot when printing. Therefore, if you want to clean the print head, turn off the printer power and wait 2 to 3 minutes before starting.
3) When cleaning the print head, do not touch the heating part of the print head, so as not to damage the print head due to static electricity.
4) Be careful not to scratch or damage the print head.

7.1 Cleaning the Printer

1) Please open the top cover and use a Clean Pen (or a cotton swab dipped in diluted alcohol (alcohol or isopropyl alcohol)) to clean the top cover from the middle of the print head to both sides.
2) After cleaning the print head, do not use the printer immediately. Wait until the clean alcohol used is completely volatilized (1 to 2 minutes) and the print head is completely dry before use.

7.2 Clean sensor, rubber roll and paper path

1) Please open the top cover of the printer and take out the paper roll.
2) Use a dry cotton cloth or cotton swab to wipe away dust or foreign matter.
3) Soak a cotton cloth or cotton swab in medical alcohol and use it to wipe away sticky foreign matter or other contaminants.
4) Do not use the printer immediately after cleaning the parts. Before using it, please wait for alcohol evaporating completely (1 to 2 minutes) and the printer drying completely.

NOTE: Clean parts when print quality or paper test performance deteriorates.

8. Technical Parameters

Method	Thermal
Printing Speed	80mm/s(MAX)
Paper width	58mm(MAX)
Paper Thickness	0.06-0.1mm
Supported Paper	Thermal Paper
Power adapter	9V/2.0A
Printing life	TPH 30km
Connection	USB (Bluetooth /Cashbox interface RJ11 optional)
Operating Environment	Temperature: 5-40°C Humidity: 20-90%
Storage Environment	Temperature: -25-55°C Humidity: 20-93%
Dimension	110*146*109mm

Warranty Card

Dear Customer:
Thank you for purchasing our products. In order to protect your legal rights, relieve your worries, and improve customer after-sales service, we've specially formulated a warranty policy. Please read it carefully and provide us your valuable opinions and suggestions.

Warranty

1. The machine warranty period of this product is 1 year, as for the printing head is 3 months or 30km (whichever comes first). From the received date of the goods, if the failure is caused by the material or process of the product itself, the corresponding certificate/receipt shall be provided for free repair or replacement.
2. Warranty service can only be performed by our company or authorized service providers, and any unauthorized repair or replacement of parts will invalidate the warranty.
3. Users need to follow the manual guide for equipment installation and other operations. If the equipment hardware is damaged due to improper use by the customer, the warranty will not be granted.
4. This warranty does not cover damage caused by natural disasters such as fire disaster, lightning or other similar reasons.
5. The company reserves the right of having concluding statement.

Customer notice

1. Please specify the reason for the product return in detail.
2. Please contact customer service before returning for repair.
3. We do not accept any form of express delivery.

Model	
Serial Number	
Customer Name	
Date of purchased	
Shop name	
Phone number	

Kad Waranti

Terima kasih kerana membeli produk kami. Untuk melindungi hak undang-undang anda, melegakan kebimbangan anda dan menambah baik perkhidmatan selepas jualan pelanggan, kami telah merumuskan dasar jaminan secara khusus. Sila baca dengan teliti dan berikan kami pendapat dan cadangan anda yang berharga.

Waranti

1. Tempoh jaminan mesin produk ini adalah 1 tahun, manakala kepala cetakan adalah 3 bulan atau 30km (mana yang lebih awal). Dari tarikh diterima barang, jika kegagalan disebabkan oleh bahan atau proses produk itu sendiri, sijil/resit yang sepadan hendaklah diberikan untuk pembaikan atau penggantian percuma.
2. Perkhidmatan waranti hanya boleh dilakukan oleh syarikat kami atau pembekal perkhidmatan yang dibenarkan , dan sebarang pembaikan atau penggantian alat ganti yang tidak dibenarkan akan membatalkan waranti.
3. Pengguna perlu mengikut panduan manual untuk pemasangan peralatan dan operasi lain. Jika perkakasan peralatan rosak akibat penggunaan yang tidak wajar oleh pelanggan, waranti tidak akan diberikan.
4. Waranti ini tidak melindungi kerosakan yang disebabkan oleh bencana alam seperti bencana kebakaran, petir atau sebab lain yang serupa.

Notis pelanggan

1. Sila nyatakan sebab pemulangan produk secara terperinci.
2. Sila hubungi khidmat pelanggan sebelum kembali untuk pembaikan.
3. Kami tidak menerima sebarang bentuk penghantaran ekspres.

Model	
Nombor siri	
Nama Pelanggan	
Tarikh dibeli	
nama kedai	
notis pelanggan	

FCC WARNING

This device complies with part 15 of the FCC Rules. Operation is subject to the following twoconditions:

(1) this device may not cause harmful interference, and

(2) this device must acceptany interference received, including interference that may cause undesired operation.Any changes or modifications not expressly approved by the party responsible for compliancecould void the user's authority to operate the equipment.

NOTE: This equipment has been tested and found to comply with the limits for a Class Bdigital device, pursuant to Part 15 of the FCC Rules. These limits are designed to provide reasonable protection against harmful interference in a residential installation. This equipment generates, uses and can radiate radio frequency energy and, if not installed and used in accordance with the instructions, may cause harmful interference to radio communications.However, there is no guarantee that interference will not occur in a particular installation.If this equipment does cause harmful interference to radio or television reception,which can be determined by turning the equipment off and on, the user is encouraged to try to correct the interference by one or more of the following measures:

-- Reorient or relocate the receiving antenna.

-- Increase the separation between the equipment and receiver.

-- Connect the equipment into an outlet on a circuit different from that to which the receiver is connected.

-- Consult the dealer or an experienced radio/TV technician for help.

To maintain compliance with FCC’ s RF Exposure guidelines, This equipment should be installed and operated with minimum distance between 20cm the radiator your body: Use only the supplied antenna.

Find out more product knowledge
and after-sales service

Xiamen IPRT Technology Co., Ltd.

Index: www.ayinprinter.com
Driver: help.ayinprinter.com
E-mail: support@iprt.com.cn