RF Test Report

Applicant	:	Avedis Zildjian Company
Product Name	:	Electronic Drum Sound Module
Trade Name	:	Zildjian
Model Number	:	E•VAULT
Applicable Standard	:	FCC 47 CFR PART 15 SUBPART C ANSI C63.10:2013
Received Date	:	Jan. 16, 2024
Test Period	:	Feb. 05, 2024 ~ Feb. 15, 2024
Issued Date	:	May 02, 2024

Issued by

Eurofins E&E Wireless Taiwan Co., Ltd.
No. 140-1, Changan Street, Bade District,
Taoyuan City 334025, Taiwan (R.O.C.)
Tel：+886-3-2710188 / Fax：+886-3-2710190

Taiwan Accreditation Foundation accreditation number: 1330
Frequency Range: 9 kHz to 325 GHz
Bade test site：
Test Firm Registration Number: 226252
Test Firm Designation Number: TW0010
Wugu test site：
Test Firm Registration Number: 191812
Test Firm Designation Number: TW0034

Note:
1.The test results are valid only for samples provided by customers and under the test conditions described in this report.
2.This report shall not be reproduced except in full, without the written approval of Eurofins E&E Wireless Taiwan Co., Ltd.
3.The relevant information is provided by customers in this test report. According to the correctness, appropriateness or completeness of the information provided by the customer, if there is any doubt or error in the information which affects the validity of the test results, the laboratory does not take the responsibility.

Revision History

Rev.	Issued Date	Description	Revised by
00	May 02, 2024	Initial Issue	Abby Hsu

Verification of Compliance

Applicant	:	Avedis Zildjian Company
Product Name	:	Electronic Drum Sound Module
Trade Name	:	Zildjian
Model Number	:	E•VAULT
FCC ID	:	2A2KDZIEV0001
Applicable Standard	:	FCC 47 CFR PART 15 SUBPART C ANSI C63.10:2013
Test Result	:	Complied
Performing Lab.	:	Eurofins E&E Wireless Taiwan Co., Ltd. No. 140-1, Changan Street, Bade District, Taoyuan City 334025, Taiwan (R.O.C.) Tel：+886-3-2710188 / Fax：+886-3-2710190 Taiwan Accreditation Foundation accreditation number: 1330

Testing Laboratory 1330

Eurofins E&E Wireless Taiwan Co., Ltd. tested the above equipment in accordance with the requirements set forth in the above standards. All indications of Pass/Fail in this report are opinions expressed by Eurofins E&E Wireless Taiwan Co., Ltd. based on interpretations and/or observations of test results. The test results show that the equipment tested is capable of demonstrating compliance with the requirements as documented in this report.

Approved By : Kai Yu Yang

TABLE OF CONTENTS

1 General Information 5
1.1. Summary of Test Result 5
1.2. Testing Location 6
1.3. Measurement Uncertainty 6
1.4. Test Site Environment 6
2 EUT Description 7
3 Test Methodology 9
3.1. Mode of Operation 9
3.2. EUT Test Step 9
3.3. Configuration of Test System Details 10
3.4. Test Instruments 12
4 Measurement Procedure 16
4.1. AC Power Line Conducted Emission Measurement 16
4.2. Radiated Emission Measurement 18
4.3. Maximum Conducted Output Power Measurement 22
4.4. 20 dB RF Bandwidth Measurement 23
4.5. Carrier Frequency Separation Measurement 24
4.6. Number of Hopping Measurement 25
4.7. Time of Occupancy (Dwell Time) Measurement 26
4.8. Out of Band Conducted Emissions Measurement 27
4.9. Antenna Measurement 28
4.10. Other requirements 28
5 Test Results 29
5.1. Conducted Emission 29
5.2. Conducted Test Results 31
5.3. Radiated Emission Measurement 32

Appendix A. Test Data
Appendix B. Test Plots
Appendix C. Test Setup Photographs

1 General Information

1.1. Summary of Test Result

Standard	Item	Result	Remark
15.207	AC Power Conducted Emission	PASS	-----
15.203	Antenna Requirement	PASS	-----
15.247(b)(1)	Max. Output Power	PASS	-----
15.247(d)	Transmitter Radiated Emissions	PASS	-----
15.247(a)(1)	20 dB RF Bandwidth	PASS	-----
15.247(a)(1)	Carrier Frequency Separation	PASS	-----
15.247(a)(1)(iii)	Number of Hopping	PASS	-----
15.247(a)(1)(iii)	Time of Occupancy (Dwell Time)	PASS	-----
15.247(d)	Out of Band Conducted Spurious Emission	PASS	-----

Decision Rule

■ Uncertainty is not included.

□ Uncertainty is included.

Standard	Description
CFR47, Part 15, Subpart C	Intentional Radiators
ANSI C63. 10: 2013	American National Standard of Procedures for Compliance Testing of Unlicensed Wireless Devices
DA 00-705	Filing and Measurement Guidelines for Frequency Hopping Spread Spectrum Systems

1.2. Testing Location

Lab Name: Eurofins E&E Wireless Taiwan Co., Ltd.

Site Address: ■ No. 140-1, Changan Street, Bade District, Taoyuan City 334025, Taiwan (R.O.C.)

Site Address: □ No. 2, Wuquan 5th Rd. Wugu Dist., New Taipei City, Taiwan (R.O.C.)

1.3. Measurement Uncertainty

Test Item	Frequency	Uncertainty	
		BD	WG
Conducted Emission	150 kHz ~ 30 MHz	2.7 dB	2.6 dB
Conducted Output Power		1.1 dB	1.1 dB
RF Bandwidth		4.5 %	4.5 %
Power Spectral Density		1.1 dB	1.1 dB

Test Item	Frequency	Uncertainty			
		96601-BD	96603-BD	96602-WG	96603-WG
Radiated Emission	9 kHz ~ 30 MHz	1.9 dB	1.9 dB	1.6 dB	1.6 dB
	30 MHz ~ 1000 MHz	4.9 dB	4.9 dB	4.8 dB	4.8 dB
	1000 MHz ~ 18000 MHz	4.9 dB	5.0 dB	5.0 dB	5.2 dB
	18000 MHz ~ 26500 MHz	4.3 dB	4.4 dB	4.4 dB	4.5 dB
	26500 MHz ~ 40000 MHz	4.5 dB	4.5 dB	4.6 dB	4.5 dB

1.4. Test Site Environment

Items	Required (IEC 60068-1)	Interval(*)
Temperature (°C)	15-35	20-30
Humidity (%RH)	25-75	45-75

(*)The measurement ambient temperature is within this range.

2 EUT Description

The product specifications of the EUT presented in the report are declared by the manufacturer who shall take full responsibility for the authenticity(except Max. RF Output Power).

Applicant	Avedis Zildjian Company 22 Longwater Drive, Norwell, Massachusetts 02061, United States	
Product Name	Electronic Drum Sound Module	
Trade Name	Zildjian	
Model Number	E•VAULT	
FCC ID	2A2KDZIEV0001	
Frequency Range	2402 ~ 2480 MHz	
Modulation Type	GFSK for 1 Mbps	
	π/4-DQPSK for 2 Mbps	
	8DPSK for 3 Mbps	
Operate Temp. Range	0 ~ 40 ℃	
EUT Power Rating	12 Vdc, 12 A	
Antenna information	Type	Max. Gain (dBi)
	CERAMIC Antenna	2.09
Max. RF Output Power	GFSK for 1 Mbps 0.00402 W	
	π/4-DQPSK for 2 Mbps 0.00692 W	
	8DPSK for 3 Mbps 0.00766 W	

CH	Freq. (MHz)	CH	Freq. (MHz)	CH	Freq. (MHz)	CH	Freq. (MHz)
0	2402	20	2422	40	2442	60	2462
1	2403	21	2423	41	2443	61	2463
2	2404	22	2424	42	2444	62	2464
3	2405	23	2425	43	2445	63	2465
4	2406	24	2426	44	2446	64	2466
5	2407	25	2427	45	2447	65	2467
6	2408	26	2428	46	2448	66	2468
7	2409	27	2429	47	2449	67	2469
8	2410	28	2430	48	2450	68	2470
19	2411	29	2431	49	2451	69	2471
10	2412	30	2432	50	2452	70	2472
11	2413	31	2433	51	2453	71	2473
12	2414	32	2434	52	2454	72	2474
13	2415	33	2435	53	2455	73	2475
14	2416	34	2436	54	2456	74	2476
15	2417	35	2437	55	2457	75	2477
16	2418	36	2438	56	2458	76	2478
17	2419	37	2439	57	2459	77	2479
18	2420	38	2440	58	2460	78	2480
19	2421	39	2441	59	2461	---	---

3 Test Methodology

3.1. Mode of Operation

Decision of Test Eurofins has verified the construction and function in typical operation. All the test modes were carried out with the EUT in normal operation, which was shown in this test report and defined as:

Pre-Test Mode	Final-Test Mode
Transmit Mode	V
BT_GFSK	V
BT_π/4-DQPSK	
BT_8DPSK	V

After verification, all tests were carried out with the worst case test modes.

By preliminary testing and verifying three axis (X, Y and Z) position of EUT transmitted status, it was found that "Y axis" position was the worst, then the final test was executed the worst condition and test data were recorded in this report.

Description of Test Modes
Preliminary tests were performed in different modulation to find the worst case. The modulation has shown the worst-case in section 4.5. Investigation has been done on all the possible configurations for searching the worst cases.

3.2. EUT Test Step

1	Setup the EUT shown on "Configuration of Test System Details."
2	Turn on the power of all equipment.
3	Turn on TX function
4	EUT run test program.

3.3. Configuration of Test System Details

Radiated Emissions

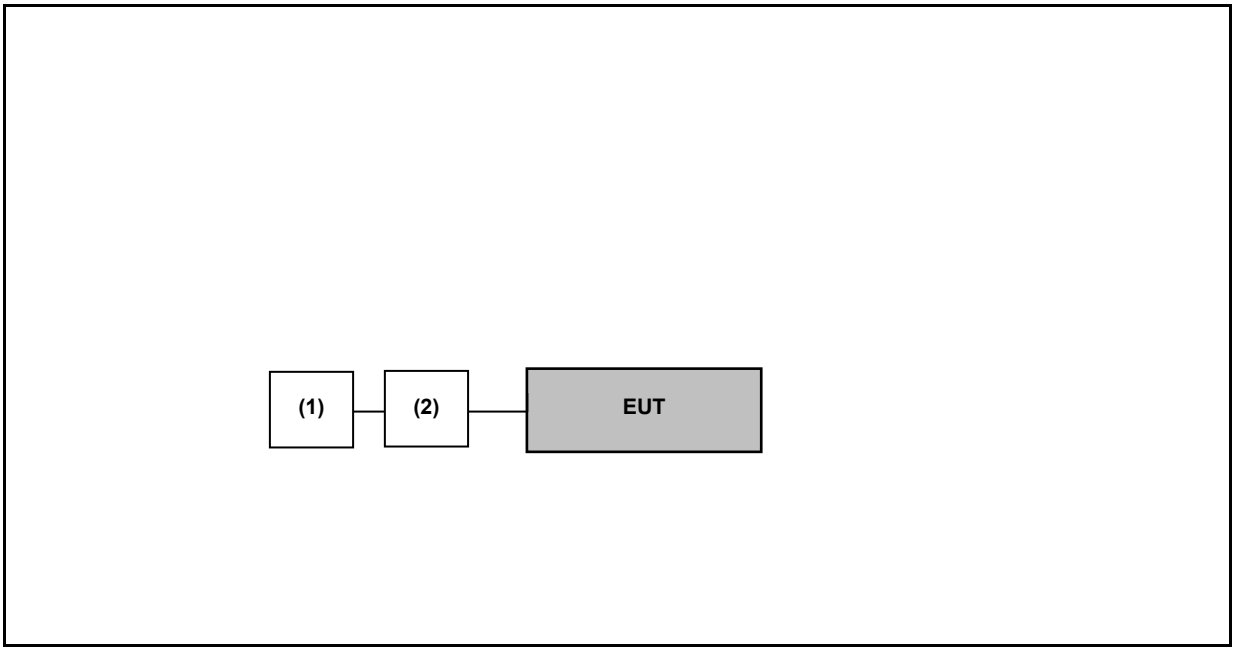

Conduction Emission

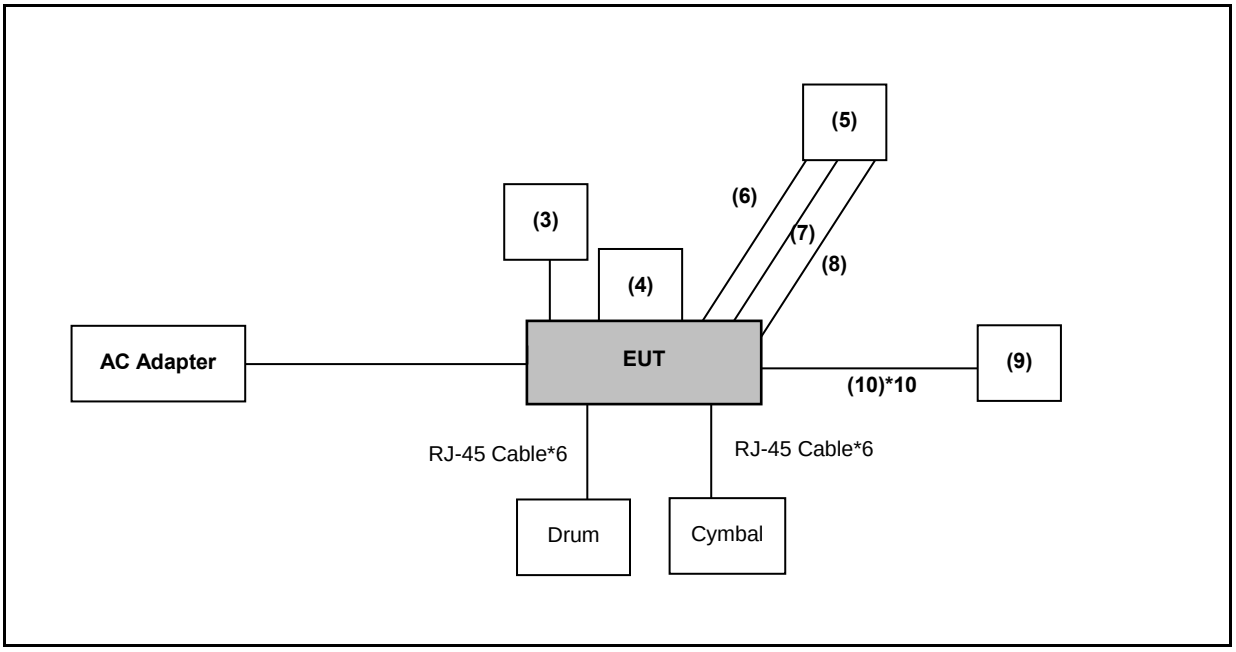

Product		Manufacturer	Model Number	Serial Number	Power Cord
(1)	Notebook	acer	N19C1	---	---
(2)	Fixture	n/a	n/a	---	---
(3)	Earphone	HUAWEI	22040296	---	---
(4)	USB Dongle	SPI	Blaze B02	---	---
(5)	Notebook	HP	HSTNN-142C	---	---
(6)	USB Cable	Popolier	n/a	---	---
(7)	Audio Cable	Roland	UM-ONE Mk2	---	---
(8)	Audio Cable	Hosa	CMM-105	---	---
(9)	AUDIO MIXER	Behringer	RX1602	---	---
(10)	Audio Cable	Roland	UM-ONE Mk2	---	---

3.4. Test Instruments

For Conducted Emission
Test Period: Feb. 07, 2024
Testing Engineer: Jayson Hsieh

Test Site		Conduction01-BD				
Use	Equipment	Manufacturer	Model Number	Serial Number	Cal. Date	Cal. Period
☒	Test Receiver	R&S	ESCI	100367	May 22, 2023	1 year
☐	Test Receiver	R&S	ESCI	100722	Oct. 26, 2023	1 year
☐	Test Receiver	R&S	ESCI	101000	Nov. 23, 2023	1 year
☒	LISN	R&S	ENV216	101040	Mar. 21, 2023	1 year
☐	LISN	R&S	ENV216	101140	Jan. 15, 2024	1 year
☒	RF Cable	Woken	00100D1380194M	TE-02-03	Jun. 01, 2023	1 year
☒	Software	EZ EMC	1.1.4.3	N/A	N.C.R.	---

☒ means with testing used ;
☐ means without testing used
Note: N.C.R. = No Calibration Request.

For Conducted
Test Period: Feb. 05, 2024 ~ Feb. 06, 2024
Testing Engineer: Luke Yang

Test Site		RF01-BD				
Use	Equipment	Manufacturer	Model Number	Serial Number	Cal. Date	Cal. Period
☒	Power Sensor	Anritsu	MA2411B	1126022	Aug. 31, 2023	1 year
☒	Power Meter	Anritsu	ML2495A	1135009	Aug. 31, 2023	1 year
☐	Power Sensor	Agilent	N1921A	MY45241957	Nov. 29, 2023	1 year
☐	Power Meter	Agilent	N1911A	MY45101619	Nov. 29, 2023	1 year
☐	Spectrum Analyzer (10 Hz~26.5 GHz)	Keysight	N9010B	MY59071418	Mar. 20, 2023	1 year
☐	Spectrum Analyzer (9 kHz~26.5 GHz)	Agilent	N9010A	MY48030518	Jul. 20, 2023	1 year
☒	Spectrum Analyzer (10 Hz~44 GHz)	Agilent	N9020B	MY60112361	Jan. 04, 2024	1 year
☐	Spectrum Analyzer (3 Hz~50 GHz)	Agilent	N9030A	MY53120541	Dec. 27, 2023	1 year
☐	Temperature & Humidity Chamber	TAICHY	MHU-225LA	980729	Mar. 29, 2023	1 year
☐	Signal Generator	Keysight	N5182B	MY53052569	Apr. 17, 2023	1 year
☐	Signal Generator	Keysight	N5182BX07	MY59360221	Apr. 17, 2023	1 year
☐	MXF-G-B RF Vector Signal Generator	Agilent	N5182B	MY53050382	May 23, 2023	1 year
☒	Bluetooth Tester	R&S	CBT	100350	Mar. 20, 2023	2 years
☐	Wireless Connectivity Tester	R&S	CMW270	102208	Jun. 05, 2023	1 year
☐	Power Supply	KEITHLEY	2303	4045290	Jan. 04, 2024	1 year

☒ means with testing used ;
☐ means without testing used
Note: N.C.R. = No Calibration Request.

For Radiated Emissions
Test Period: Feb. 15, 2024
Testing Engineer: Hung Chou

Test Site		96603-BD				
Radiation test sites		Semi Anechoic Room				
Use	Equipment	Manufacturer	Model Number	Serial Number	Cal. Date	Cal. Period
☐	Spectrum Analyzer (10 Hz~44 GHz)	Keysight	N9010A	MY52221312	Jan. 04, 2024	1 year
☐	Spectrum Analyzer (3 Hz~50 GHz)	Agilent	N9030A	MY53120541	Dec. 27, 2023	1 year
☐	Spectrum Analyzer (2 Hz~50 GHz)	Keysight	N9030B	MY57143537	Apr. 18, 2023	1 year
☒	Spectrum Analyzer (10 Hz~44 GHz)	Keysight	N9020B	MY60112363	Jan. 10, 2024	1 year
☒	Amplifier (100 kHz~1.3 GHz)	Agilent	8447D	2944A11119	Jan. 10, 2024	1 year
☐	Amplifier (100 kHz~1.3 GHz)	Agilent	8447D	2944A10961	Jul. 10, 2023	1 year
☐	Broadband Amplifier (100 kHz~1 GHz)	Titan	T0910E00014330 A1F	001	Jul. 24, 2023	1 year
☐	Amplifier (1 GHz~26.5 GHz)	Agilent	8449B	3008A02237	Oct. 31, 2023	1 year
☒	Broadband Amplifier (1 GHz~26.5 GHz)	Titan	T0912E01263025 A1F	002	Jul. 24, 2023	1 year
☐	Preamplifier (26.5 GHz~40 GHz)	EMCI	EMC2654045	980028	Sep. 01, 2023	1 year
☒	Loop Antenna (9 kHz~30 MHz)	COM-POWER CORPORATION	AL-130	121014	Mar. 23, 2023	1 year
☐	Active Loop Antenna (9 kHz~30 MHz)	Schwarzbeck Mess-Elektronik	FMZB 1513-60	1513-60-031	Feb. 21, 2023	1 year
☒	Trilog Broadband Antenna (30 kHz~1 GHz)	Schwarzbeck Mess-Elektronik	VULB9168	01146	Jun. 26, 2023	1 year
☐	Trilog Broadband Antenna (30 kHz~1 GHz)	Schwarzbeck Mess-Elektronik	VULB9168	416	Jun. 13, 2023	1 year
☒	Broadband Horn Antenna (1 GHz~18 GHz)	Schwarzbeck Mess-Elektronik	9120D	02207	Jul. 07, 2023	1 year

☒ means with testing used ;
☐ means without testing used
Note: N.C.R. = No Calibration Request.

For Radiated Emissions
Test Period: Feb. 15, 2024
Testing Engineer: Hung Chou

Test Site		96603-BD				
Radiation test sites		Semi Anechoic Room				
Use	Equipment	Manufacturer	Model Number	Serial Number	Cal. Date	Cal. Period
☐	Broadband Horn Antenna (1 GHz~18 GHz)	Schwarzbeck Mess-Elektronik	9120D	9120D-550	Jul. 21, 2023	1 year
☒	Broadband Horn Antenna (18 GHz~40 GHz)	Schwarzbeck Mess-Elektronik	9170	9170-320	Jul. 21, 2023	1 year
☐	Horn Antenna (18 GHz~40 GHz)	ETS	3116	00086467	Dec. 08, 2023	1 year
☒	Coaxial Cable	Titan	T0710AT327A10A 100	J11005	Aug. 10, 2023	1 year
☒	Coaxial Cable	Titan	T0710AT327A10A 900	J11004	Aug. 10, 2023	1 year
☒	Coaxial Cable	Titan	CFD400NL-LW	001	Aug. 10, 2023	1 year
☒	Bluetooth Tester	R&S	CBT	100350	Mar. 20, 2023	2 years
☐	Wireless Connectivity Tester	R&S	CMW270	102208	Jun. 05, 2023	1 year
☐	Power Supply	KEITHLEY	2303	4045290	Jan. 04, 2024	1 year
☒	Software	EZ EMC	1.1.4.4	N/A	N.C.R.	---

☒ means with testing used ;
☐ means without testing used
Note: N.C.R. = No Calibration Request.

4 Measurement Procedure

4.1. AC Power Line Conducted Emission Measurement

■ **Limit**

Frequency (MHz)	Quasi-peak	Average
0.15 - 0.5	66 to 56	56 to 46
0.50 - 5.0	56	46
5.0 - 30.0	60	50

■ **Test Setup**

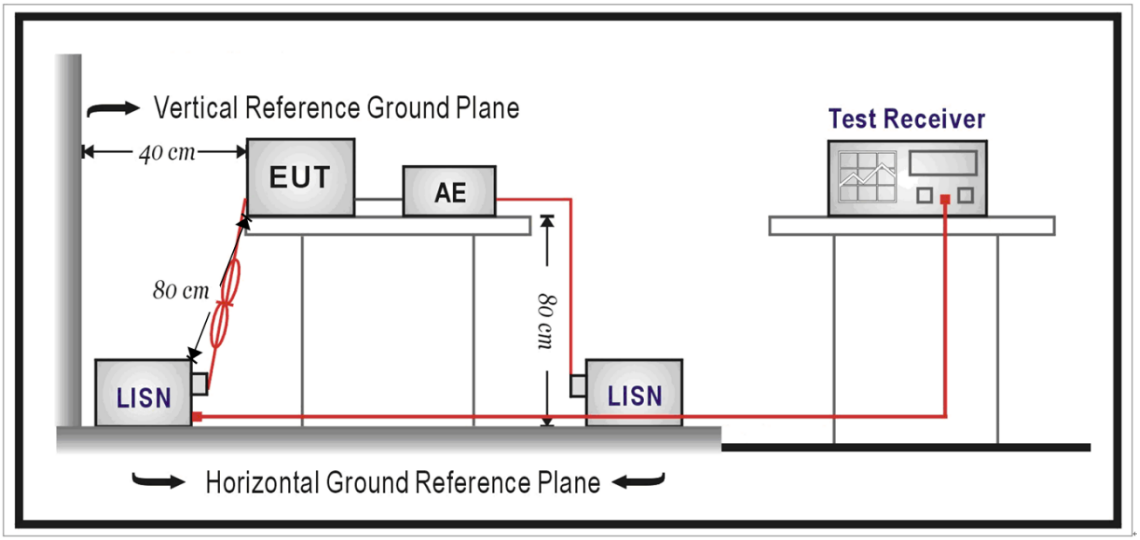

■ **Test Procedure**

The EUT and simulators are connected to the main power through a line impedance stabilization network (L.I.S.N.). This provides a 50 Ω// 50 uH coupling impedance for the measuring equipment. The peripheral devices are also connected to the main power through a LISN that provides a 50 Ω// 50 uH coupling impedance with 50 ohm termination.

Tabletop device shall be placed on a non-conducting platform, of nominal size 1 m by 1.5 m, raised 80 cm above the reference ground plane. The wall of screened room shall be located 40 cm to the rear of the EUT. Other surfaces of tabletop or floor standing EUT shall be at least 80 cm from any other ground conducting surface including one or more LISNs. For floor-standing device shall be placed under the EUT with a 12 mm insulating material.

Conducted emissions were investigated over the frequency range from 0.15 MHz to 30 MHz using a resolution bandwidth of 9 kHz. The equipment under test (EUT) shall be meet the limits in section 4.1, as applicable, including the average limit and the quasi-peak limit when using respectively, an average detector and quasi-peak detector measured in accordance with the methods described of related standard. When all of peak value were complied with quasi-peak and average limit from 150 kHz to 30 MHz then quasi-peak and average measurement was unnecessary.

The AMN shall be placed 0.8 m from the boundary of the unit under test and bonded to a ground reference plane for AMNs mounted on top of the ground reference plane. This distance is between the closest points of the AMN and the EUT. All other units of the EUT and associated equipment shall be at least 0.8 m from the AMN. If the mains power cable is longer than 1 m then the cable shall be folded back and forth at the centre of the lead to form a bundle no longer than 0.4 m. All of interconnecting cables that hang closer than 40 cm to the ground plane shall be folded back and forth in the center forming a bundle 30 cm to 40 cm long. All of EUT and AE shall be separate place more than 0.1 m. All 50 Ω ports of the LISN shall be resistively terminated into 50 Ω loads when not connected to the measuring instrument.

If the reading of the measuring receiver shows fluctuations close to the limit, the reading shall be observed for at least 15 s at each measurement frequency; the higher reading shall be recorded with the exception of any brief isolated high reading which shall be ignored.

4.2. Radiated Emission Measurement

■ **Limit**

According to §15.209(a), except as provided elsewhere in this subpart, the emissions from an intentional radiator shall not exceed the field strength levels specified in the following table:

Frequency (MHz)	Field Strength (μV/m at meter)	Measurement Distance (meters)
0.009 – 0.490	2400 / F (kHz)	300
0.490 – 1.705	24000 / F (kHz)	30
1.705 – 30.0	30	30
30 - 88	100**	3
88-216	150**	3
216-960	200**	3
Above 960	500	3

** Except as provided in paragraph (g), fundamental emissions from intentional radiators operating under this Section shall not be located in the frequency bands 54-72 MHz, 76-88 MHz, 174-216 MHz or 470-806 MHz. However, operation within these frequency bands is permitted under other sections of this Part, e.g., Sections 15.231 and 15.241.

■ **Setup**

9 kHz ~ 30 MHz

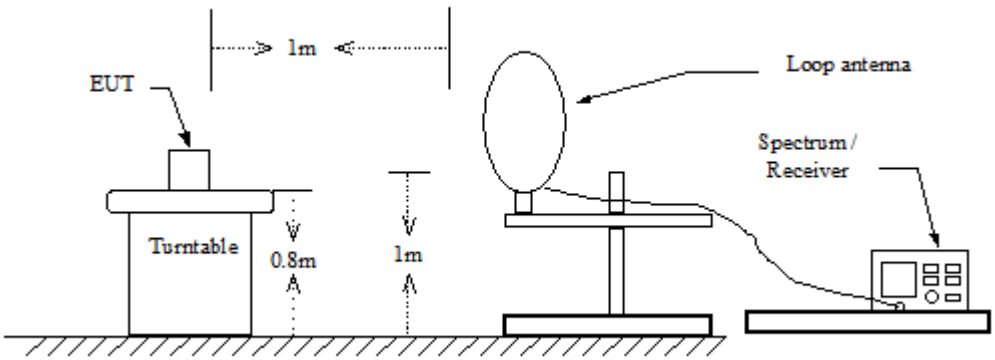

Below 1 GHz

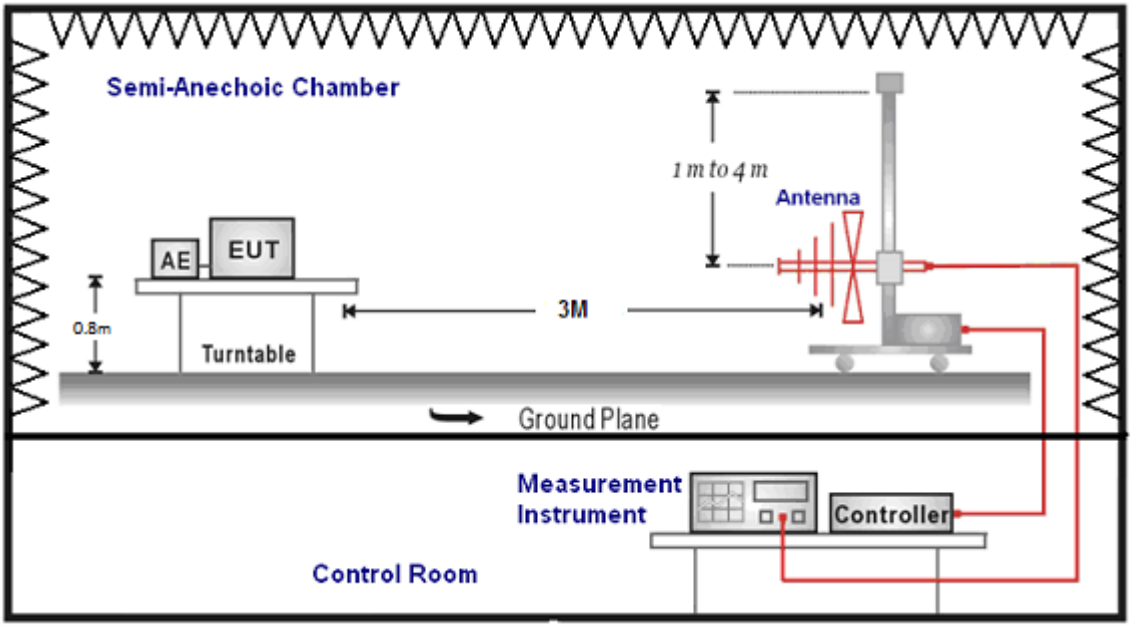

Above 1 GHz

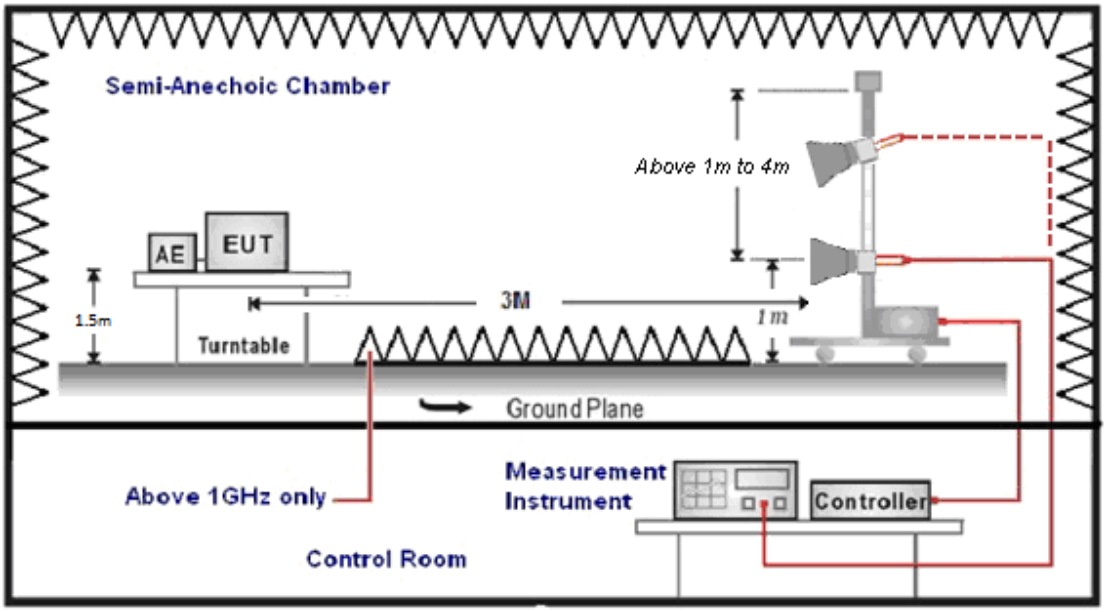

■ **Test Procedure**

Final radiation measurements were made on a three-meter, Semi Anechoic Chamber. The EUT system was placed on a nonconductive turntable which is 0.8 or 1.5 meters height, top surface 1.0 x 1.5 meter. The spectrum was examined from 250 MHz to 2.5 GHz in order to cover the whole spectrum below 10th harmonic which could generate from the EUT. During the test, EUT was set to transmit continuously & Measurements spectrum range from 9 kHz to 26.5 GHz is investigated.

For measurements below 30 MHz the resolution bandwidth is set to 10 kHz for peak detection measurements or 9 kHz for quasi-peak detection measurements. The video bandwidth is 3 times of the resolution bandwidth.

For measurements below 1 GHz the resolution bandwidth is set to 100 kHz for peak detection measurements or 120 kHz for quasi-peak detection measurements. Peak detection is used unless otherwise noted as quasi-peak.

For measurements above 1 GHz the resolution bandwidth is set to 1 MHz, and then the video bandwidth is set to 3 MHz for peak measurements and 10 Hz for average measurements when Duty cycle >98 % / 1/T for average measurements when Duty cycle <98 %. A nonconductive material surrounded the EUT to supporting the EUT for standing on tree orthogonal planes. At each condition, the EUT was rotated 360 degrees, and the antenna was raised and lowered from one to four meters to find the maximum emission levels. Measurements were taken using both horizontal and vertical antenna polarization.

SCHWARZBECK MESS-ELEKTRONIK Biconilog Antenna at 3 Meter and the SCHWARZBECK Double Ridged Guide Antenna was used in frequencies 1 – 26.5 GHz at a distance of 1 meter. All test results were extrapolated to equivalent signal at 3 meters utilizing an inverse linear distance extrapolation Factor (20 dB/decade).

For testing above 1 GHz, the emission level of the EUT in peak mode was 20 dB lower than average limit (that means the emission level in peak mode also complies with the limit in average mode), then testing will be stopped and peak values of EUT will be reported, otherwise, the emissions will be measured in average mode again and reported.

Appropriate preamplifiers were used for improving sensitivity and precautions were taken to avoid overloading or desensitizing the spectrum analyzer. No post – detector video filters were used in the test.

The spectrum analyzer's 6 dB bandwidth was set to 1 MHz, and the analyzer was operated in the peak detection mode, for frequencies both below and up 1 GHz. The average levels were obtained by subtracting the duty cycle correction factor from the peak readings.

The following procedures were used to convert the emission levels measured in decibels referenced to 1 microvolt (dBuV) into field intensity in micro volts pre meter (uV/m).

The actual field intensity in decibels referenced to 1 microvolt in to field intensity in micro colts per meter (dBuV/m).

The actual field is intensity in referenced to 1 microvolt per meter (dBuV/m) is determined by algebraically adding the measured reading in dBuV, the antenna factor (dB), and cable loss (dB) and Subtracting the gain of preamplifier (dB) is auto calculate in spectrum analyzer.

(1) Amplitude (dBuV/m) = FI (dBuV) +AF (dBuV) +CL (dBuV)-Gain (dB)
FI= Reading of the field intensity.
AF= Antenna factor.
CL= Cable loss.
P.S Amplitude is auto calculate in spectrum analyzer.

(2) Actual Amplitude (dBuV/m) = Amplitude (dBuV)-Dis(dB)
The FCC specified emission limits were calculated according the EUT operating frequency and by following linear interpolation equations:
(a) For fundamental frequency : Transmitter Output < +30 dBm
(b) For spurious frequency : Spurious emission limits = fundamental emission limit /10

Data of measurement within this frequency range without mark in the table above means the reading of emissions are attenuated more than 20 dB below the permissible limits or the field strength is too small to be measured.

4.3. Maximum Conducted Output Power Measurement

■ **Limit**

For frequency hopping systems operating in the 2400–2483.5 MHz band employing at least 75 non-overlapping hopping channels < 0.125 watt.

■ **Test Setup**

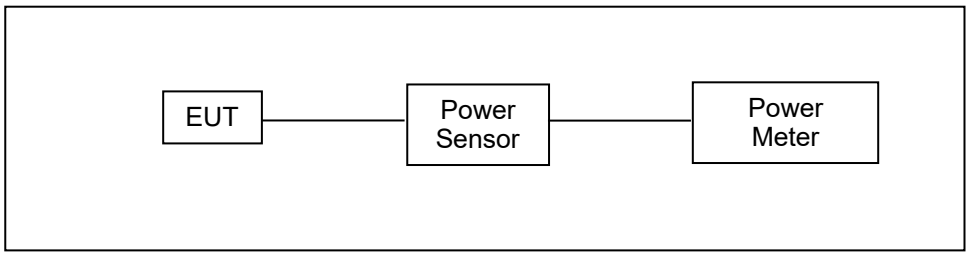

■ **Test Procedure**

Testing must be done according to this procedure, FCC Public Notice DA 00-705 - Filing and Measurement Guidelines for Frequency Hopping Spread Spectrum Systems. This is the only method recognized by the FCC. The tests below are run with the EUT's transmitter set at high power in TX mode. The EUT is needed to force selection of output power level and channel number. While testing, EUT was set to transmit continuously. Remove the Subjective device's antenna and connect the RF output port to power sensor. The maximum peak output power shall not exceed 1 watt.

Use a direct connection between the antenna port of transmitter and the power sensor, for prevent the power sensor input attenuation 40-50 dB. Set the RBW Bandwidth of the emission or use a channel power meter mode.

For antennas with gains of 6 dBi or less, maximum allowed transmitter output is 1 watt (+30 dBm). For antennas with gains greater than 6 dBi, transmitter output level must be decreased by an amount equal to (GAIN - 6)/3 dBm.

The antenna port of the EUT was connected to the input of a power sensor. Power was read directly and cable loss correction was added to the reading to obtain power at the EUT antenna terminals.

4.4. 20 dB RF Bandwidth Measurement

■ **Limit**

N/A

■ **Test Setup**

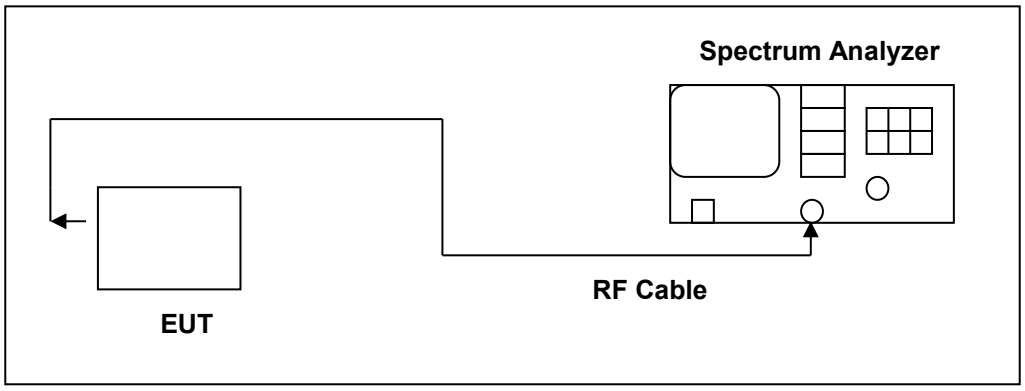

■ **Test Procedure**

Testing must be done according to this procedure, FCC Public Notice DA 00-705 - Filing and Measurement Guidelines for Frequency Hopping Spread Spectrum Systems. This is the only method recognized by the FCC. The RF output port of the Equipment-Under-Test is directly coupled to the input of the EMC analyzer through a specialized RF connector and a 10 dB passive attenuator. A fully charged battery was used for the supply voltage. The Bluetooth frequency hopping function of the EUT was enabled. The spectrum analyzer used the following settings:

1. Span = approx. 2 to 3 times the 20 dB bandwidth, centered on a hopping frequency
2. RBW ≥ 1 % of the 20 dB span
3. VBW ≥ RBW
4. Sweep = auto
5. Detector function = peak
6. Trace = max hold

The trace was allowed to stabilize. The EUT was transmitting at its maximum data rate. The marker-to-peak function was used to set the marker to the peak of the emission. The marker-delta function was used to measure 20 dB down one side of the emission. The marker-delta function and marker was moved to the other side of the emission until it was even with the reference marker. The marker-delta reading at this point was the 20 dB bandwidth of the emission.

4.5. Carrier Frequency Separation Measurement

■ **Limit**

Title 47 of the CFR, Part 15 Subpart (c) 15.247(a)(1) requires the measurement of the bandwidth of the transmission between the -20 dB points on the transmitted spectrum. The results of this test determine the limits for channel spacing. The channel spacing shall be a minimum of 25 kHz or the 20 dB bandwidth, whichever is greater. Alternatively, frequency hopping systems operating in the 2400-2483.5 MHz band may have hopping channel carrier frequencies that are separated by 25 kHz or two-thirds of the 20 dB bandwidth of the hopping channel.

■ **Test Setup**

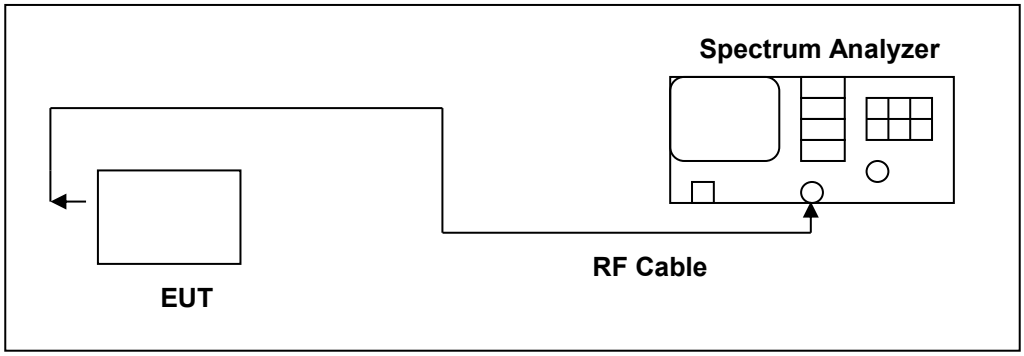

■ **Test Procedure**

Testing must be done according to this procedure, FCC Public Notice DA 00-705 - Filing and Measurement Guidelines for Frequency Hopping Spread Spectrum Systems. This is the only method recognized by the FCC. The RF output port of the Equipment-Under-Test is directly coupled to the input of the EMC analyzer through a specialized RF connector and a 10 dB passive attenuator. A fully charged battery was used for the supply voltage. The Bluetooth frequency hopping function of the EUT was enabled. The following spectrum analyzer settings were used:

1. Span = wide enough to capture the peaks of two adjacent channels
2. Resolution (or IF) Bandwidth (RBW) = Start with the RBW set to approximately 30% of the channel spacing; adjust as necessary to best identify the center of each individual channel.
3. Video (or Average) Bandwidth (VBW) ≥ RBW
4. Sweep = auto
5. Detector function = peak
6. Trace = max hold

The trace was allowed to stabilize. The marker-delta function was used to determine the separation between the peaks of the adjacent channels.

4.6. Number of Hopping Measurement

■ **Limit**

Frequency hopping systems in the 2400–2483.5 MHz band shall use at least 15 channels.

■ **Test Setup**

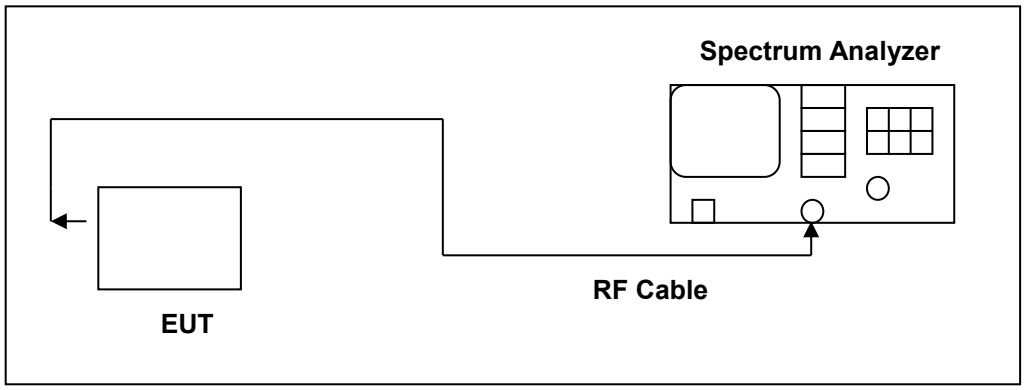

■ **Test Procedure**

Testing must be done according to this procedure, FCC Public Notice DA 00-705 - Filing and Measurement Guidelines for Frequency Hopping Spread Spectrum Systems. This is the only method recognized by the FCC. The RF output port of the Equipment-Under-Test is directly coupled to the input of the EMC analyzer through a specialized RF connector and a 10 dB passive attenuator. A fully charged battery was used for the supply voltage. The Bluetooth frequency hopping function of the EUT was enabled. The spectrum analyzer used the following settings:

1. Span = the frequency band of operation
2. RBW = To identify clearly the individual channels, set the RBW to less than 30% of the channel spacing or the 20 dBbandwidth, whichever is smaller.
3. VBW ≥ RBW
4. Sweep = auto
5. Detector function = peak
6. Trace = max hold

The trace was allowed to stabilize.

4.7. Time of Occupancy (Dwell Time) Measurement

■ **Limit**

The average time of occupancy on any channel shall not be greater than 0.4 seconds within a period of 0.4 seconds multiplied by the number of hopping channels employed.

■ **Test Setup**

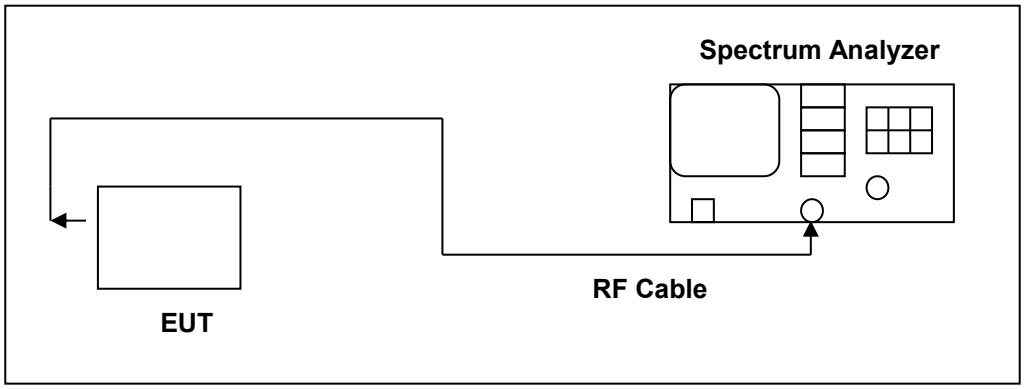

■ **Test Procedure**

Testing must be done according to this procedure, FCC Public Notice DA 00-705 - Filing and Measurement Guidelines for Frequency Hopping Spread Spectrum Systems. This is the only method recognized by the FCC. The RF output port of the Equipment-Under-Test is directly coupled to the input of the spectrum through a specialized RF connector and a 10 dB passive attenuator. A fully charged battery was used for the supply voltage. The Bluetooth hopping function of the EUT was enabled. The following spectrum analyzer settings were used:

1. Span = zero span, centered on a hopping channel
2. RBW = 1 MHz
3. VBW $\geq$ RBW
4. Sweep = as necessary to capture the entire dwell time per hopping channel
5. Detector function = peak
6. Trace = max hold

The marker-delta function was used to determine the dwell time.

4.8. Out of Band Conducted Emissions Measurement

■ **Limit**

In any 100 kHz bandwidth outside the frequency band in which the spread spectrum or digitally modulated intentional radiator is operating, the radio frequency power that is produced by the intentional radiator shall be at least 20 dB below that in the 100 kHz bandwidth within the band that contains the highest level of the desired power

■ **Test Setup**

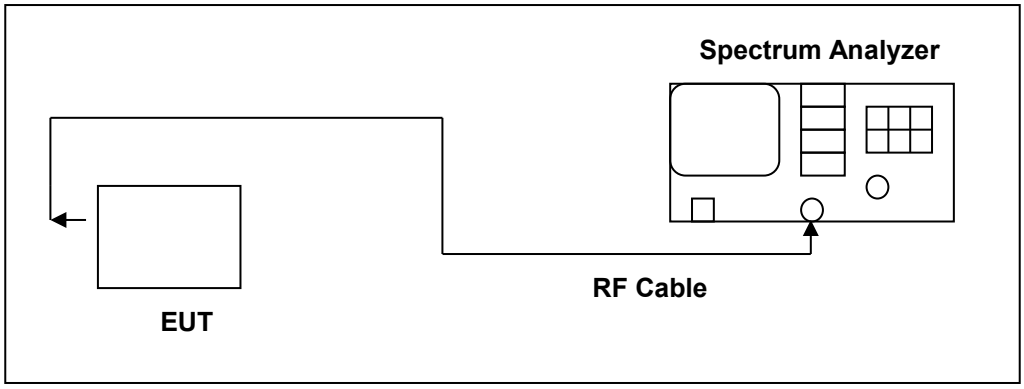

■ **Test Procedure**

Testing must be done according to this procedure, FCC Public Notice DA 00-705 - Filing and Measurement Guidelines for Frequency Hopping Spread Spectrum Systems. This is the only method recognized by the FCC. In any 100 kHz bandwidth outside the EUT pass band, the RF power produced by the modulation products of the spreading sequence, the information sequence, and the carrier frequency shall be at least 20 dB below that of the maximum in-band 100 kHz emission, antenna output of the EUT was coupled directly to spectrum analyzer; if an external attenuator and/or cable was used, these losses are compensated for with the analyzer OFFSET function.
All other types of emissions from the EUT shall meet the general limits for radiated frequencies outside the pass band. The test was performed at 3 channels (Channel 0, 39, 78)

4.9. Antenna Measurement

- **Limit**

For intentional device, according to 15.203, an intentional radiator shall be designed to ensure that no antenna other than that furnished by the responsible party shall be used with the device.
And According to 15.247 (b)(4), if transmitting antennas of directional gain greater than 6 dBi are used, the power shall be reduced by the amount in dB that the directional gain of the antenna exceeds 6 dBi.

- **Antenna Connector Construction**

See section 2 – antenna information.

4.10. Other requirements

- **System Receiver Input Bandwidth**

Each channel bandwidth is 100 kHz.
The system receivers have input bandwidths that match the hopping channel bandwidths of their corresponding transmitters and shift frequencies in synchronization with the transmitted signals.

- **Equipment Description**

The system shall hop to channel frequencies that are selected at the system hopping rate from a pseudo randomly ordered list of hopping frequencies. The system receivers shall have input bandwidths that match the hopping channel bandwidths of their corresponding transmitters and shall shift frequencies in synchronization with the transmitted signals.

5 Test Results

5.1. Conducted Emission

Standard:	FCC Part 15.247	Line:	L1
Test item:	Conducted Emission	Power:	AC 120 V/60 Hz
Mode:	Transmit Mode		
Description:			

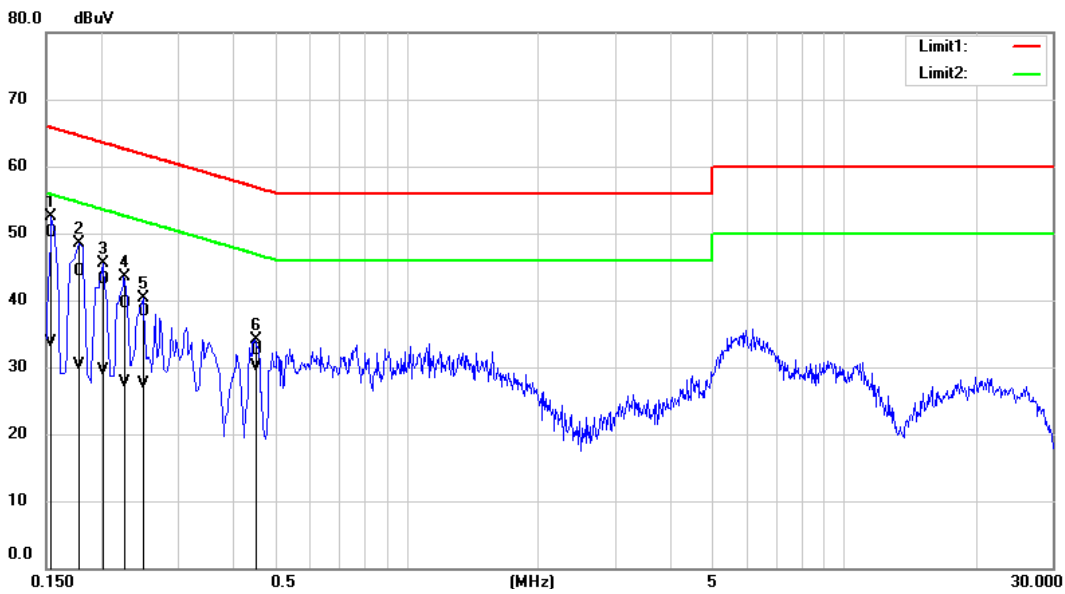

No.	Frequency (MHz)	QP reading (dBuV)	AVG reading (dBuV)	Correction factor (dB)	QP result (dBuV)	AVG result (dBuV)	QP limit (dBuV)	AVG limit (dBuV)	QP margin (dB)	AVG margin (dB)	Remark
1	0.1540	40.50	24.18	9.61	50.11	33.79	65.78	55.78	-15.67	-21.99	Pass
2	0.1780	34.64	20.75	9.61	44.25	30.36	64.58	54.58	-20.33	-24.22	Pass
3	0.2020	33.52	19.99	9.61	43.13	29.60	63.53	53.53	-20.40	-23.93	Pass
4	0.2260	29.92	18.14	9.61	39.53	27.75	62.60	52.60	-23.07	-24.85	Pass
5	0.2500	28.60	17.94	9.61	38.21	27.55	61.76	51.76	-23.55	-24.21	Pass
6	0.4500	22.85	20.51	9.63	32.48	30.14	56.88	46.88	-24.40	-16.74	Pass

Note: 1. Result (dBuV) = Correction factor (dB) + Reading(dBuV).

2. Correction factor (dB) = Cable loss (dB) + L.I.S.N. factor (dB).

Standard:	FCC Part 15.247	Line:	N
Test item:	Conducted Emission	Power:	AC 120 V/60 Hz
Mode:	Transmit Mode		
Description:			

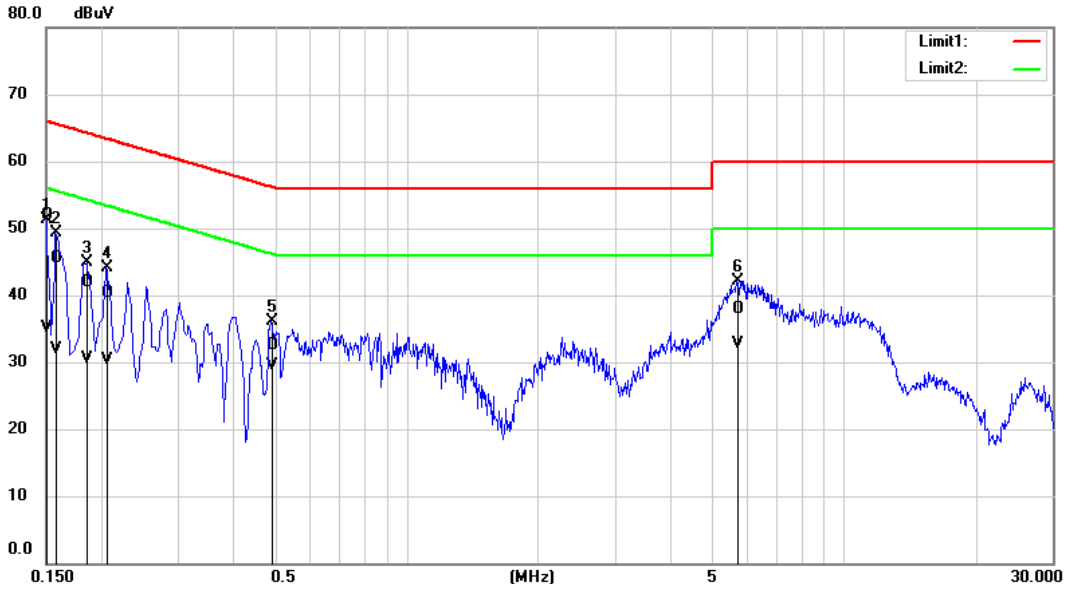

No.	Frequency (MHz)	QP reading (dBuV)	AVG reading (dBuV)	Correction factor (dB)	QP result (dBuV)	AVG result (dBuV)	QP limit (dBuV)	AVG limit (dBuV)	QP margin (dB)	AVG margin (dB)	Remark
1	0.1500	42.37	25.57	9.60	51.97	35.17	66.00	56.00	-14.03	-20.83	Pass
2	0.1580	35.84	22.25	9.60	45.44	31.85	65.57	55.57	-20.13	-23.72	Pass
3	0.1860	32.27	20.93	9.61	41.88	30.54	64.21	54.21	-22.33	-23.67	Pass
4	0.2060	30.66	20.67	9.61	40.27	30.28	63.37	53.37	-23.10	-23.09	Pass
5	0.4900	22.81	19.82	9.62	32.43	29.44	56.17	46.17	-23.74	-16.73	Pass
6	5.7020	28.10	23.00	9.80	37.90	32.80	60.00	50.00	-22.10	-17.20	Pass

Note: 1. Result (dBuV) = Correction factor (dB) + Reading(dBuV).

2. Correction factor (dB) = Cable loss (dB) + L.I.S.N. factor (dB).

5.2. Conducted Test Results

Maximum Conducted Output Power Measurement

Reference Appendix A

20 dB RF Bandwidth Measurement

Reference Appendix A / Appendix B

Carrier Frequency Separation Measurement

Reference Appendix A / Appendix B

Number of Hopping Measurement

Reference Appendix A / Appendix B

Out of Band Conducted Emissions Measurement

Reference Appendix B

Time of Occupancy (Dwell Time) Measurement

Reference Appendix A / Appendix B

5.3. Radiated Emission Measurement

Below 1 GHz

Standard:	FCC Part 15.247	Test Distance:	3m
Mode:	BT_GFSK 2480 MHz		
Ant.Polar.:	Horizontal		

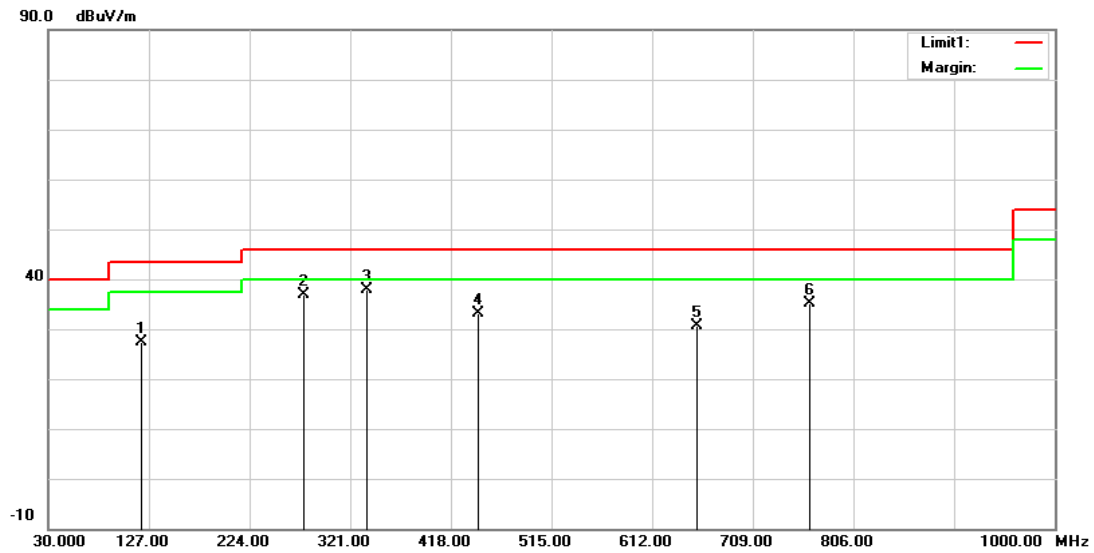

No.	Frequency (MHz)	Reading (dBuV)	Correct Factor (dB/m)	Result (dBuV/m)	Limit (dBuV/m)	Margin (dB)	Remark
1	120.2100	36.96	-9.46	27.50	43.50	-16.00	QP
2	276.3800	42.96	-6.16	36.80	46.00	-9.20	QP
3*	336.5200	42.76	-4.83	37.93	46.00	-8.07	QP
4	444.1900	35.30	-2.09	33.21	46.00	-12.79	QP
5	655.6500	29.13	1.52	30.65	46.00	-15.35	QP
6	764.2900	31.28	3.74	35.02	46.00	-10.98	QP

Note:1.Result (dBuV/m) = Correct Factor (dB/m) + Reading(dBuV).

2.Correction factor (dB/m) = Antenna Factor (dB/m) + Cable loss (dB) – Pre-Amplifier gain (dB).

3.When the peak results are less than average limit, so not need to evaluate the average.

Standard:	FCC Part 15.247	Test Distance:	3m
Mode:	BT_GFSK 2480 MHz		
Ant.Polar.:	Vertical		

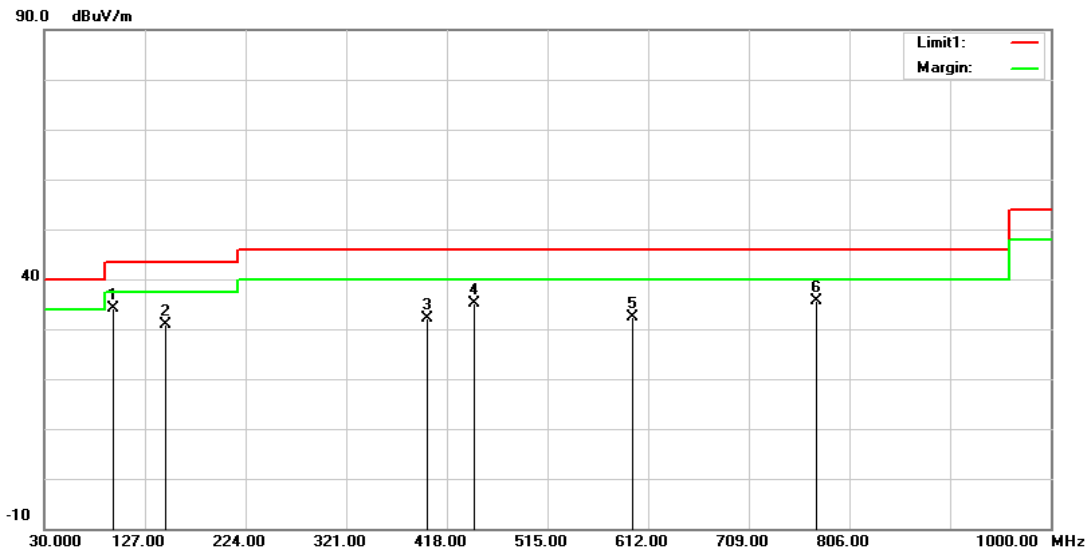

No.	Frequency (MHz)	Reading (dBuV)	Correct Factor (dB/m)	Result (dBuV/m)	Limit (dBuV/m)	Margin (dB)	Remark
1*	95.9600	46.61	-12.59	34.02	43.50	-9.48	QP
2	147.3700	37.91	-7.09	30.82	43.50	-12.68	QP
3	399.5700	35.25	-3.18	32.07	46.00	-13.93	QP
4	444.1900	37.19	-2.09	35.10	46.00	-10.90	QP
5	597.4500	31.80	0.55	32.35	46.00	-13.65	QP
6	773.9900	31.65	3.88	35.53	46.00	-10.47	QP

Note:1.Result (dBuV/m) = Correct Factor (dB/m) + Reading(dBuV).

2.Correction factor (dB/m) = Antenna Factor (dB/m) + Cable loss (dB) – Pre-Amplifier gain (dB).

3.When the peak results are less than average limit, so not need to evaluate the average.

Harmonic

Above 1 GHz

Standard:	Part 15C	Test Site:	966 Chamber
Polarization:	Horizontal		
Test Mode:	BT_GFSK 2402 MHz		
Remark:			

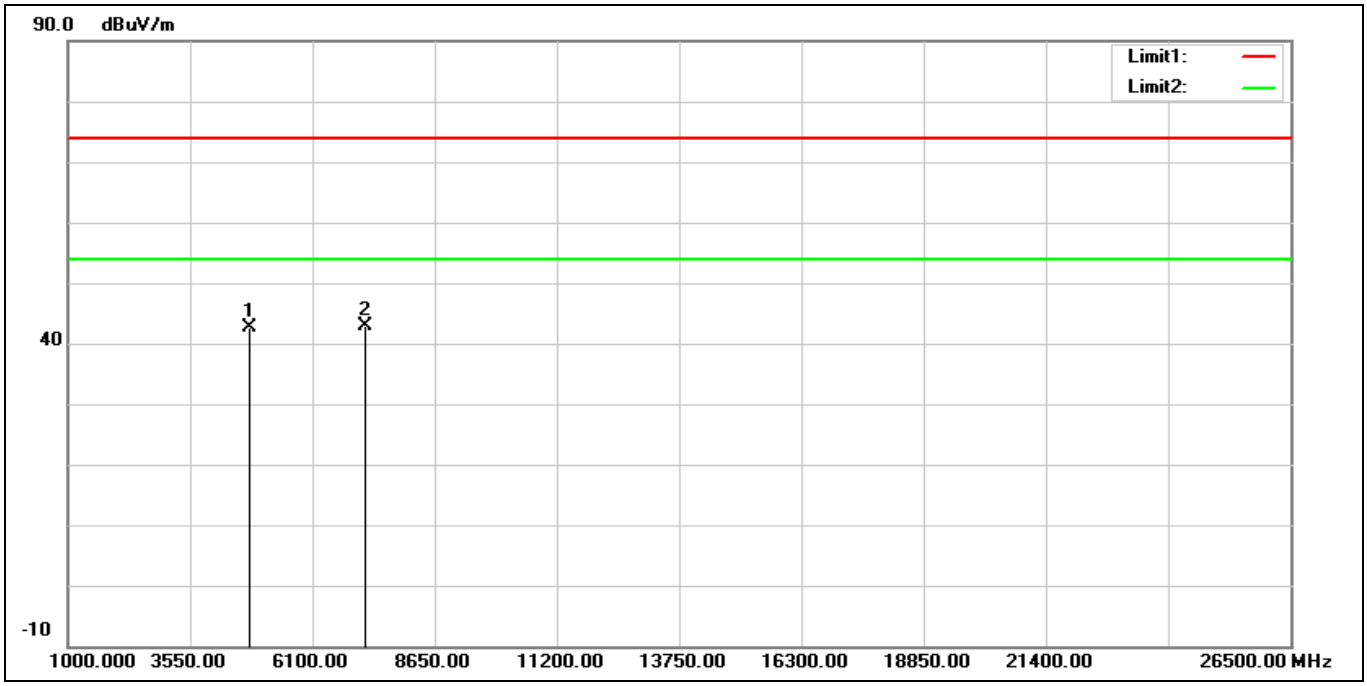

No.	Frequency (MHz)	Reading (dBuV)	Correction (dB/m)	Result (dBuV/m)	Limit (dBuV/m)	Margin (dB)	Remark
1	4804.000	42.84	-0.31	42.53	74.00	-31.47	peak
2*	7206.000	36.25	6.52	42.77	74.00	-31.23	peak

Standard:	Part 15C	Test Site:	966 Chamber
Polarization:	Vertical		
Test Mode:	BT_GFSK 2402 MHz		
Remark:			

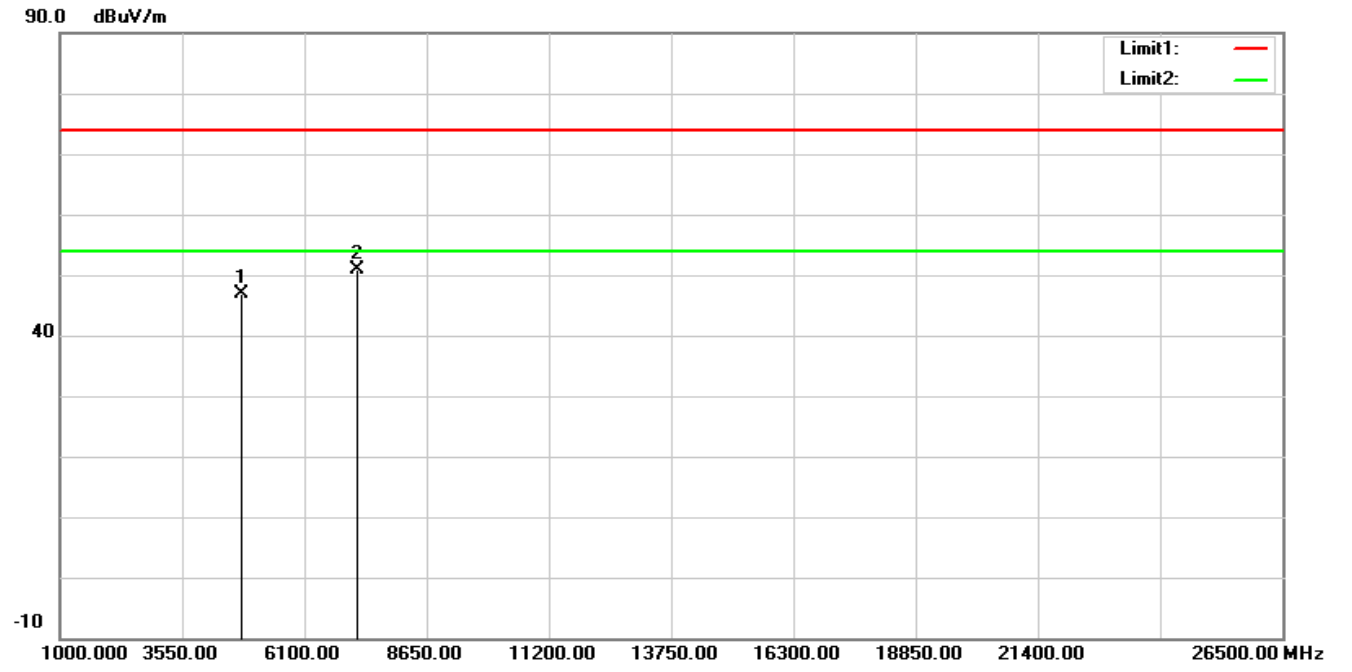

No.	Frequency (MHz)	Reading (dBuV)	Correction (dB/m)	Result (dBuV/m)	Limit (dBuV/m)	Margin (dB)	Remark
1	4804.000	47.14	-0.31	46.83	74.00	-27.17	peak
2*	7206.000	44.31	6.52	50.83	74.00	-23.17	peak

Standard:	Part 15C	Test Site:	966 Chamber
Polarization:	Horizontal		
Test Mode:	BT_GFSK 2441 MHz		
Remark:			

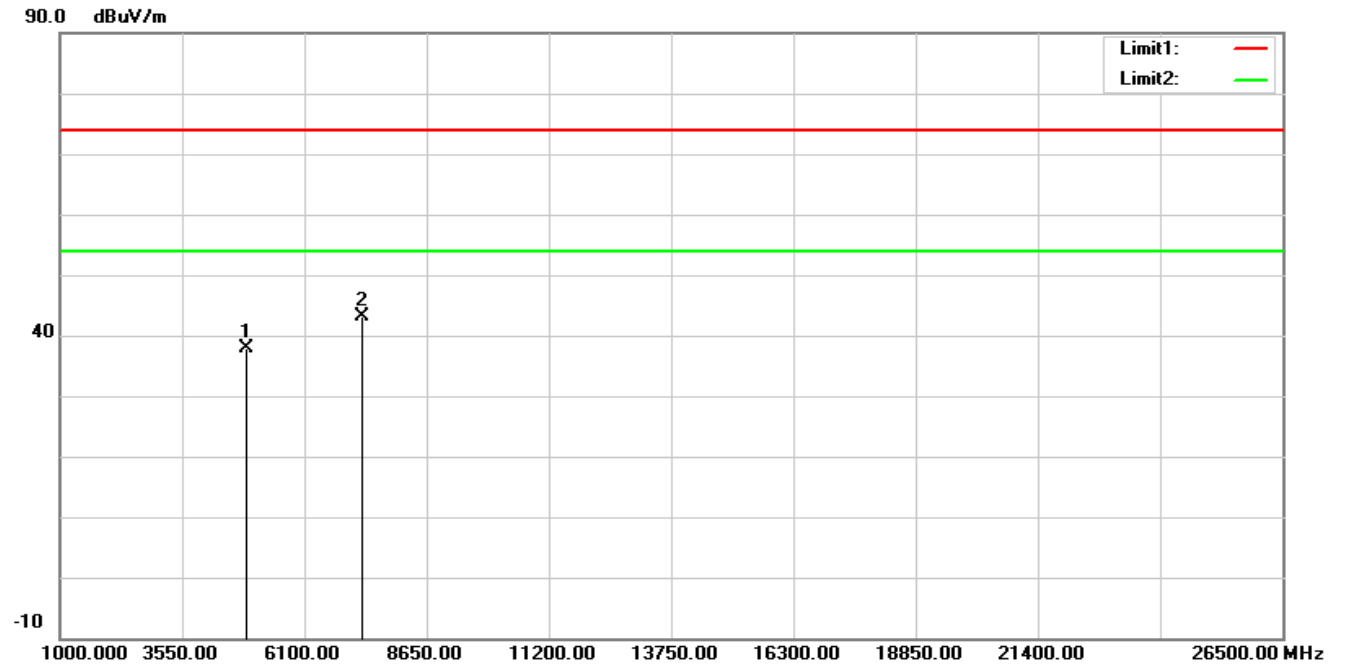

No.	Frequency (MHz)	Reading (dBuV)	Correction (dB/m)	Result (dBuV/m)	Limit (dBuV/m)	Margin (dB)	Remark
1	4882.000	38.04	-0.13	37.91	74.00	-36.09	peak
2*	7323.000	36.87	6.21	43.08	74.00	-30.92	peak

Standard:	Part 15C	Test Site:	966 Chamber
Polarization:	Vertical		
Test Mode:	BT_GFSK 2441 MHz		
Remark:			

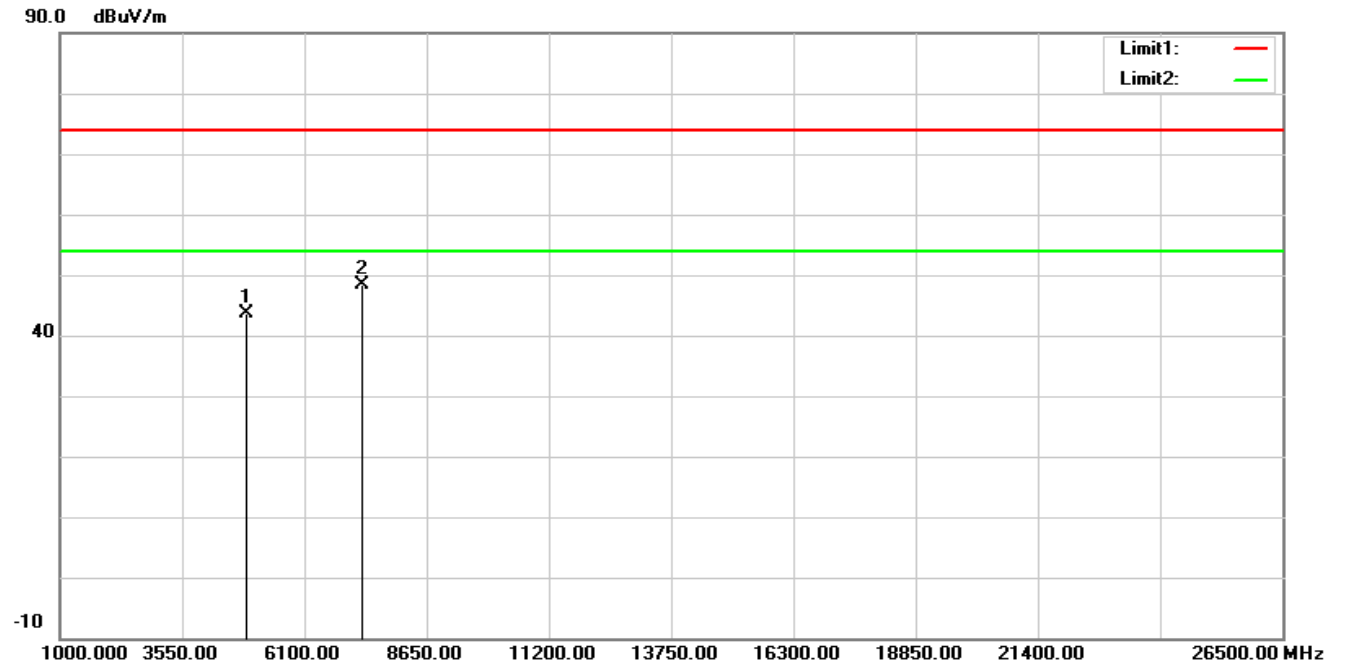

No.	Frequency (MHz)	Reading (dBuV)	Correction (dB/m)	Result (dBuV/m)	Limit (dBuV/m)	Margin (dB)	Remark
1	4882.000	43.67	-0.13	43.54	74.00	-30.46	peak
2*	7323.000	42.29	6.21	48.50	74.00	-25.50	peak

Standard:	Part 15C	Test Site:	966 Chamber
Polarization:	Horizontal		
Test Mode:	BT_GFSK 2480 MHz		
Remark:			

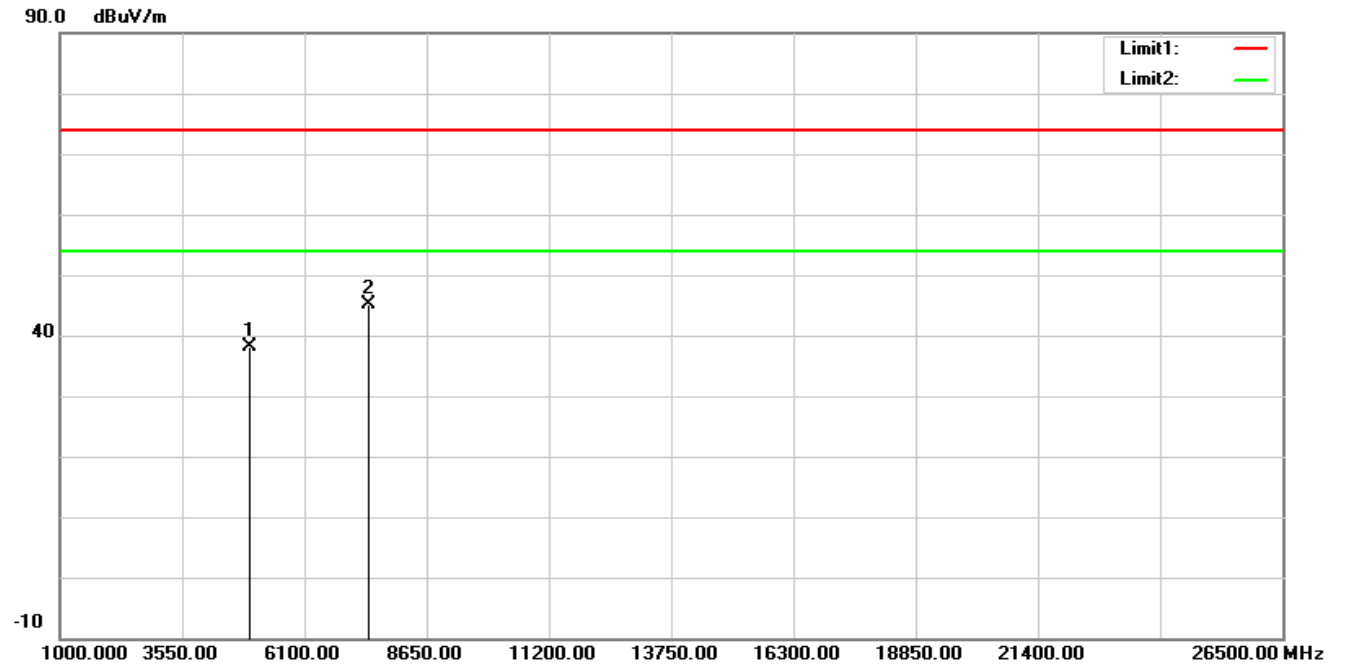

No.	Frequency (MHz)	Reading (dBuV)	Correction (dB/m)	Result (dBuV/m)	Limit (dBuV/m)	Margin (dB)	Remark
1	4960.000	38.02	0.22	38.24	74.00	-35.76	peak
2*	7440.000	38.63	6.40	45.03	74.00	-28.97	peak

Standard:	Part 15C	Test Site:	966 Chamber
Polarization:	Vertical		
Test Mode:	BT_GFSK 2480 MHz		
Remark:			

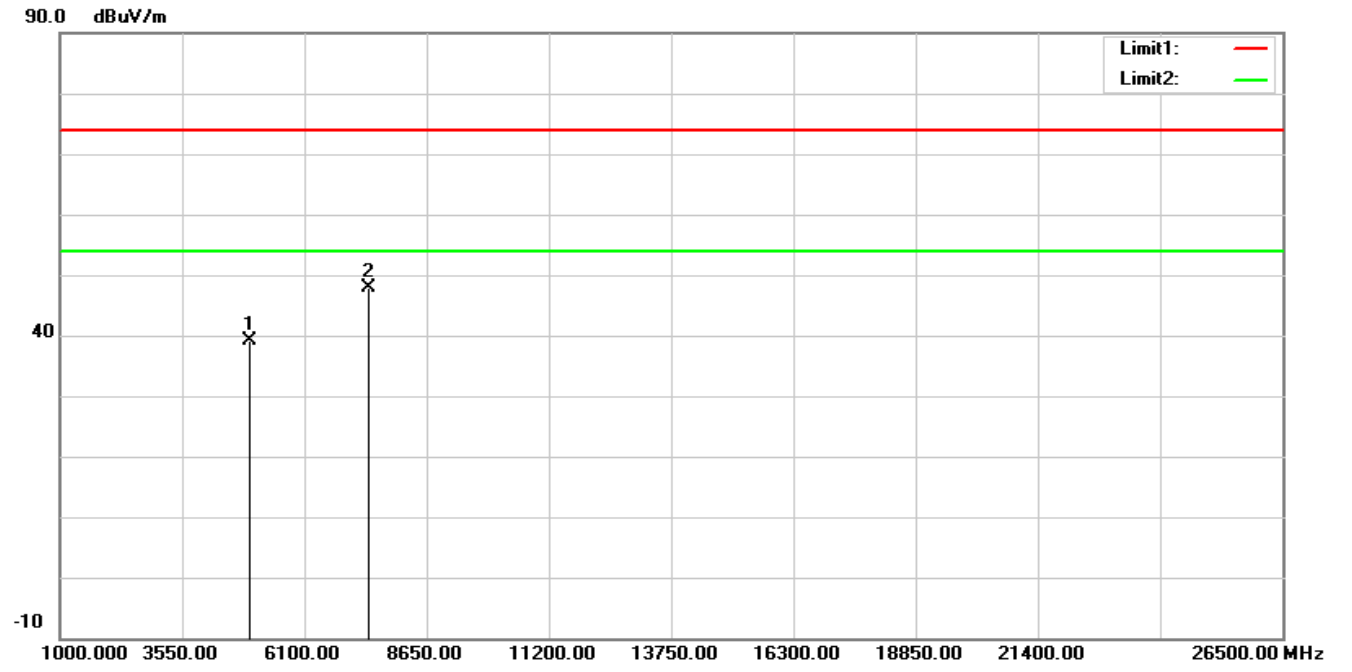

No.	Frequency (MHz)	Reading (dBuV)	Correction (dB/m)	Result (dBuV/m)	Limit (dBuV/m)	Margin (dB)	Remark
1	4960.000	38.80	0.22	39.02	74.00	-34.98	peak
2*	7440.000	41.56	6.40	47.96	74.00	-26.04	peak

Standard:	Part 15C	Test Site:	966 Chamber
Polarization:	Horizontal		
Test Mode:	BT_8DPSK 2402 MHz		
Remark:			

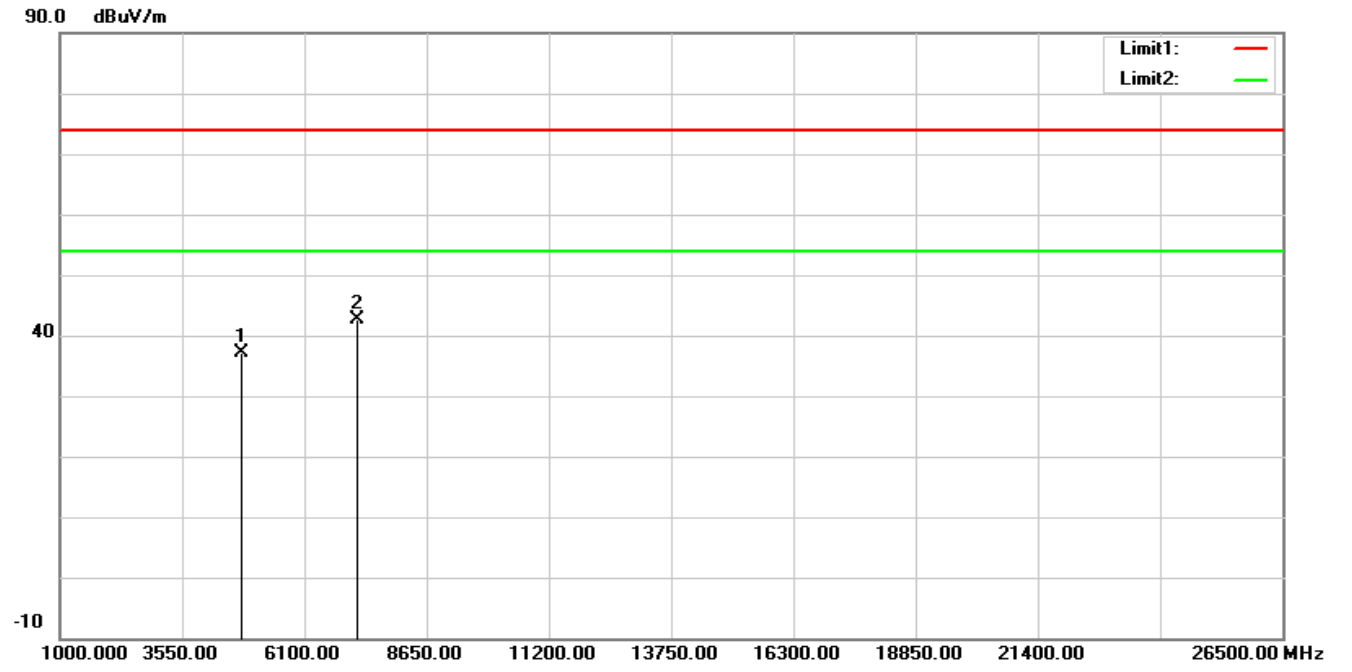

No.	Frequency (MHz)	Reading (dBuV)	Correction (dB/m)	Result (dBuV/m)	Limit (dBuV/m)	Margin (dB)	Remark
1	4804.000	37.33	-0.31	37.02	74.00	-36.98	peak
2*	7206.000	36.01	6.52	42.53	74.00	-31.47	peak

Standard:	Part 15C	Test Site:	966 Chamber
Polarization:	Vertical		
Test Mode:	BT_8DPSK 2402 MHz		
Remark:			

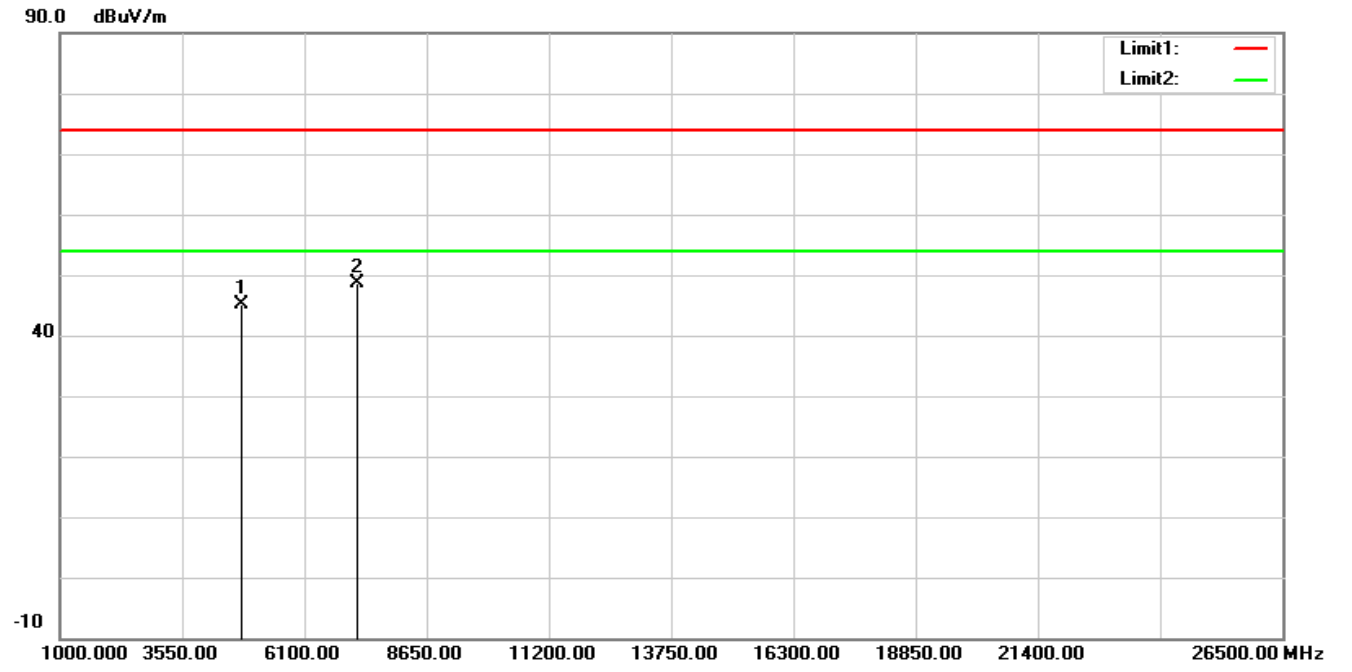

No.	Frequency (MHz)	Reading (dBuV)	Correction (dB/m)	Result (dBuV/m)	Limit (dBuV/m)	Margin (dB)	Remark
1	4804.000	45.51	-0.31	45.20	74.00	-28.80	peak
2*	7206.000	42.20	6.52	48.72	74.00	-25.28	peak

Standard:	Part 15C	Test Site:	966 Chamber
Polarization:	Horizontal		
Test Mode:	BT_8DPSK 2441 MHz		
Remark:			

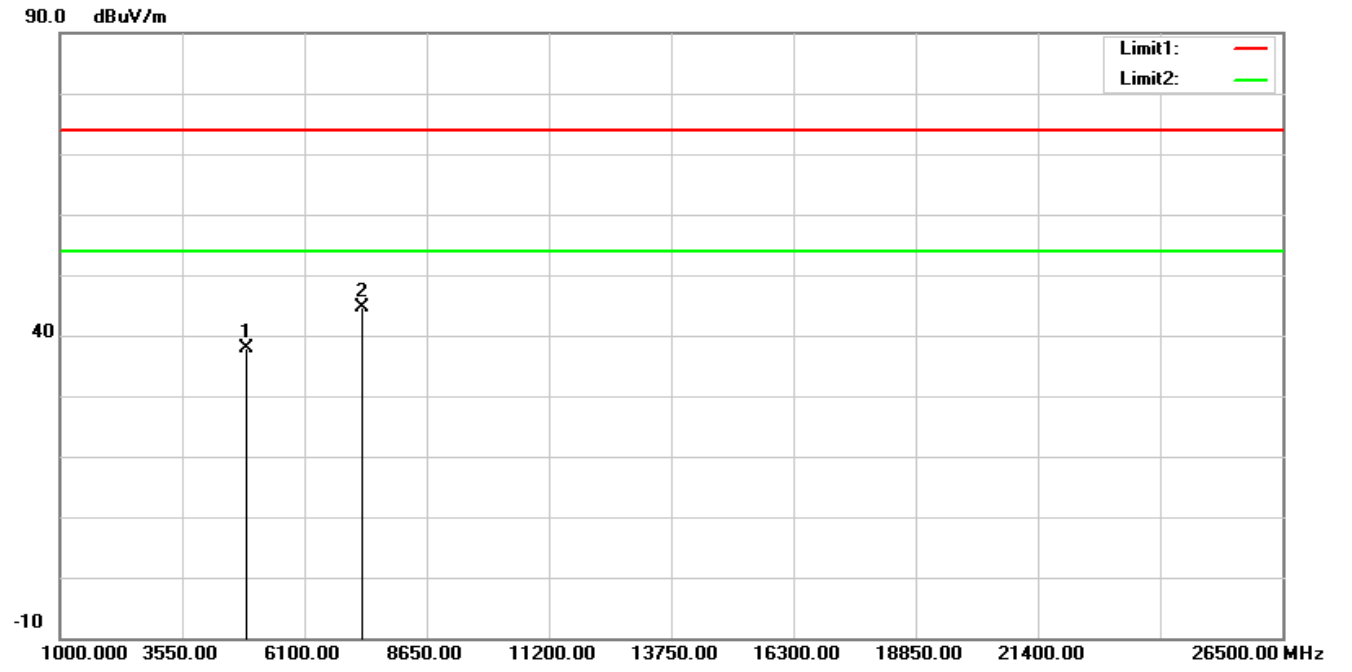

No.	Frequency (MHz)	Reading (dBuV)	Correction (dB/m)	Result (dBuV/m)	Limit (dBuV/m)	Margin (dB)	Remark
1	4882.000	38.03	-0.13	37.90	74.00	-36.10	peak
2*	7323.000	38.52	6.21	44.73	74.00	-29.27	peak

Standard:	Part 15C	Test Site:	966 Chamber
Polarization:	Vertical		
Test Mode:	BT_8DPSK 2441 MHz		
Remark:			

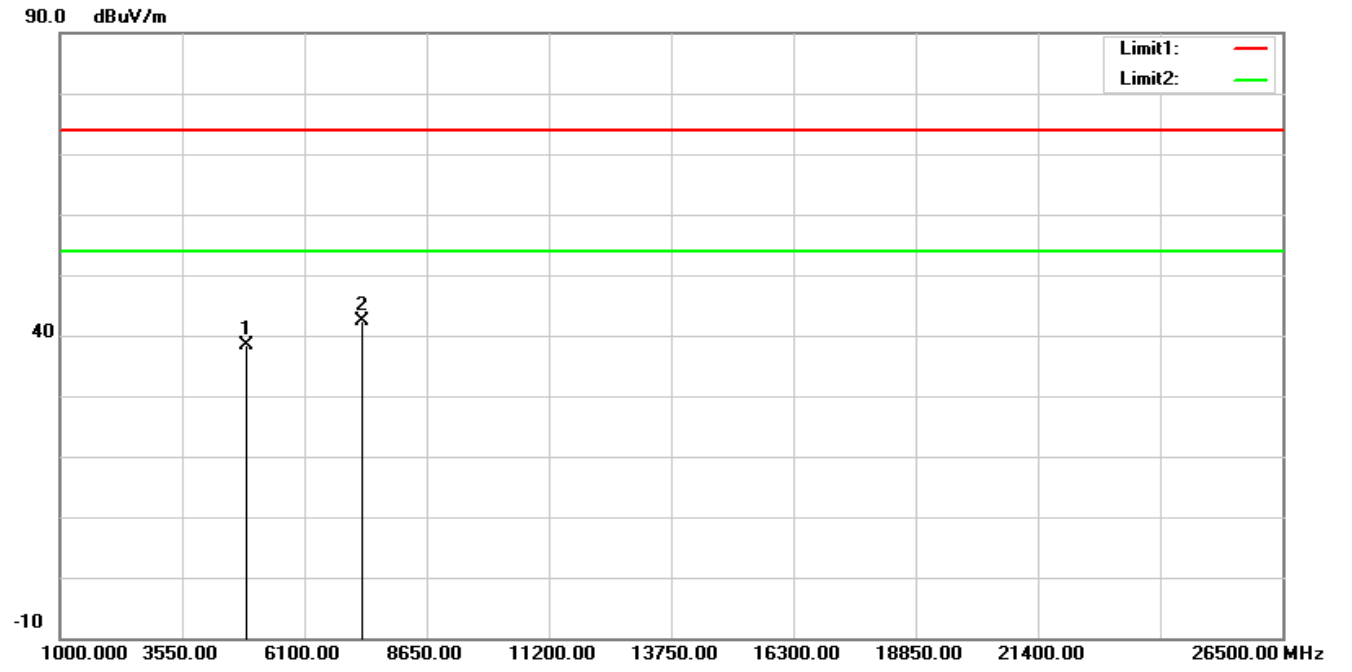

No.	Frequency (MHz)	Reading (dBuV)	Correction (dB/m)	Result (dBuV/m)	Limit (dBuV/m)	Margin (dB)	Remark
1	4882.000	38.58	-0.13	38.45	74.00	-35.55	peak
2*	7323.000	36.05	6.21	42.26	74.00	-31.74	peak

Standard:	Part 15C	Test Site:	966 Chamber
Polarization:	Horizontal		
Test Mode:	BT_8DPSK 2480 MHz		
Remark:			

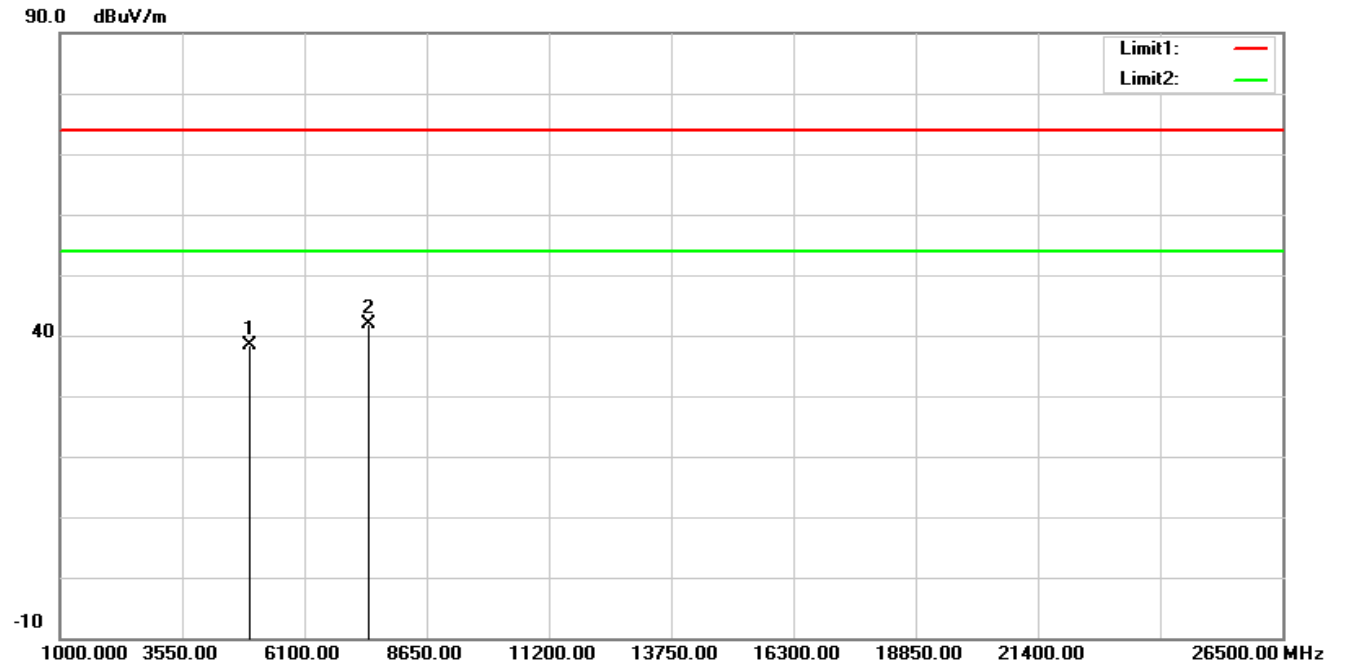

No.	Frequency (MHz)	Reading (dBuV)	Correction (dB/m)	Result (dBuV/m)	Limit (dBuV/m)	Margin (dB)	Remark
1	4960.000	38.06	0.22	38.28	74.00	-35.72	peak
2*	7440.000	35.59	6.40	41.99	74.00	-32.01	peak

Standard:	Part 15C	Test Site:	966 Chamber
Polarization:	Vertical		
Test Mode:	BT_8DPSK 2480 MHz		
Remark:			

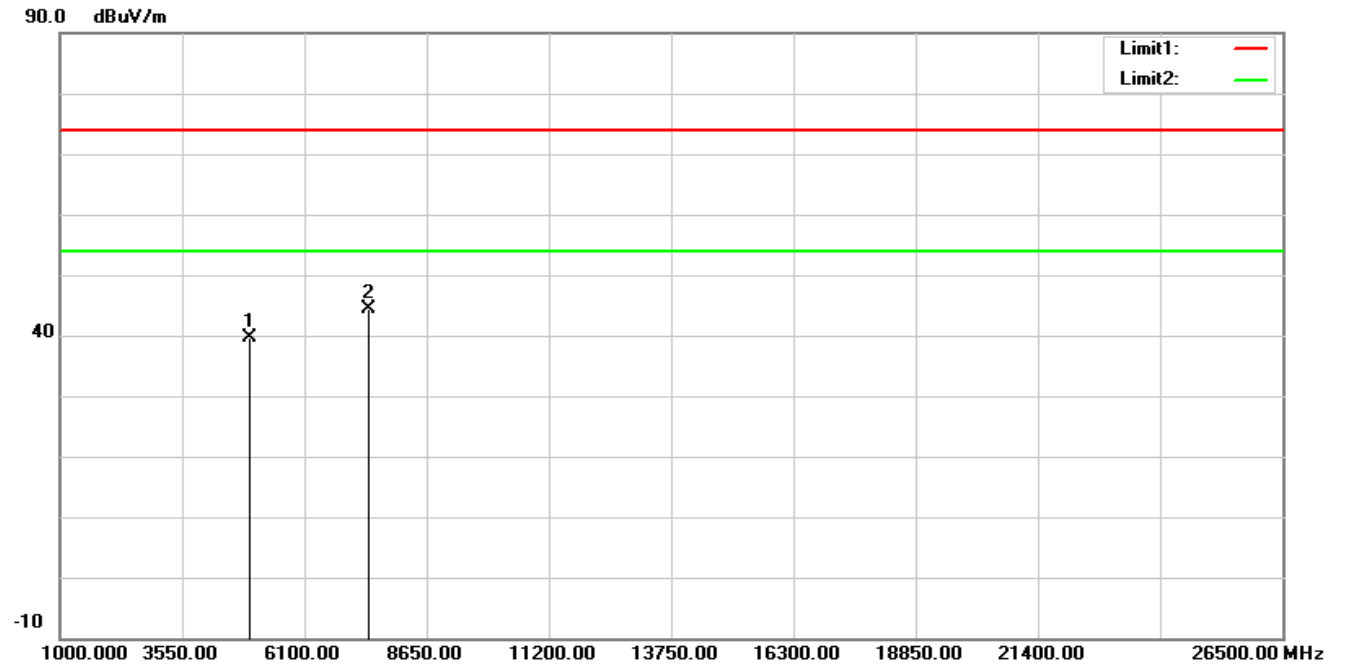

No.	Frequency (MHz)	Reading (dBuV)	Correction (dB/m)	Result (dBuV/m)	Limit (dBuV/m)	Margin (dB)	Remark
1	4960.000	39.39	0.22	39.61	74.00	-34.39	peak
2*	7440.000	38.09	6.40	44.49	74.00	-29.51	peak

Band Edge

Standard:	Part 15C	Test Site:	966 Chamber
Polarization:	Horizontal		
Test Mode:	BT_GFSK 2402 MHz		
Remark:			

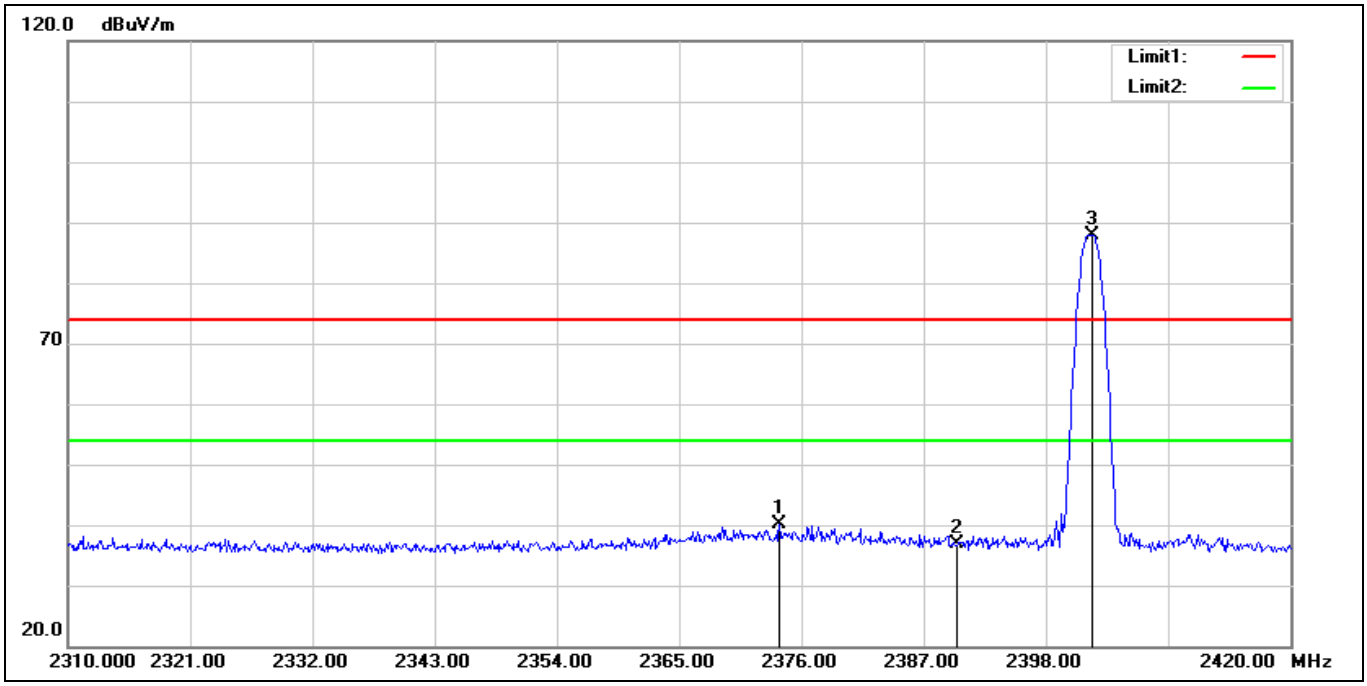

No.	Frequency (MHz)	Reading (dBuV)	Correction (dB/m)	Result (dBuV/m)	Limit (dBuV/m)	Margin (dB)	Remark
1	2374.020	46.53	-6.48	40.05	74.00	-33.95	peak
2	2390.000	43.33	-6.50	36.83	74.00	-37.17	peak
3*	2402.180	94.49	-6.51	87.98	74.00	13.98	peak

Standard:	Part 15C	Test Site:	966 Chamber
Polarization:	Vertical		
Test Mode:	BT_GFSK 2402 MHz		
Remark:			

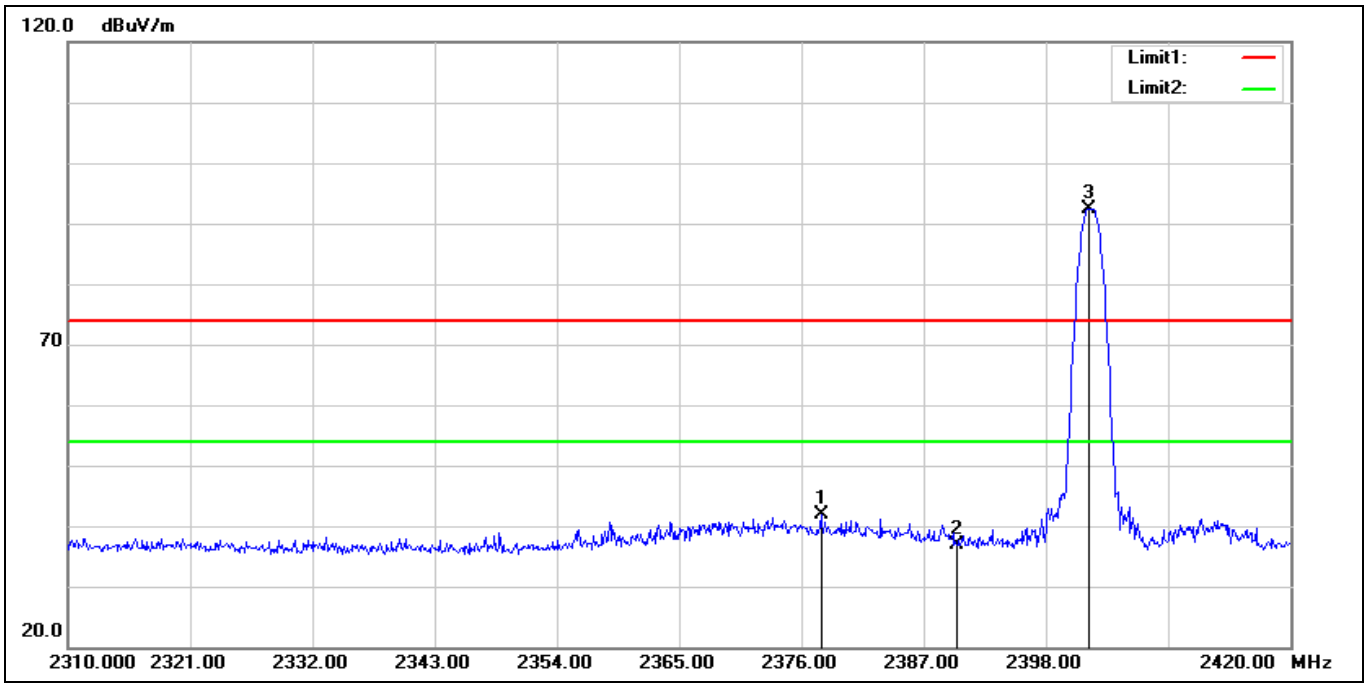

No.	Frequency (MHz)	Reading (dBuV)	Correction (dB/m)	Result (dBuV/m)	Limit (dBuV/m)	Margin (dB)	Remark
1	2377.760	48.44	-6.49	41.95	74.00	-32.05	peak
2	2390.000	43.48	-6.50	36.98	74.00	-37.02	peak
3*	2401.850	98.96	-6.51	92.45	74.00	18.45	peak

Standard:	Part 15C	Test Site:	966 Chamber
Polarization:	Horizontal		
Test Mode:	BT_GFSK 2480 MHz		
Remark:			

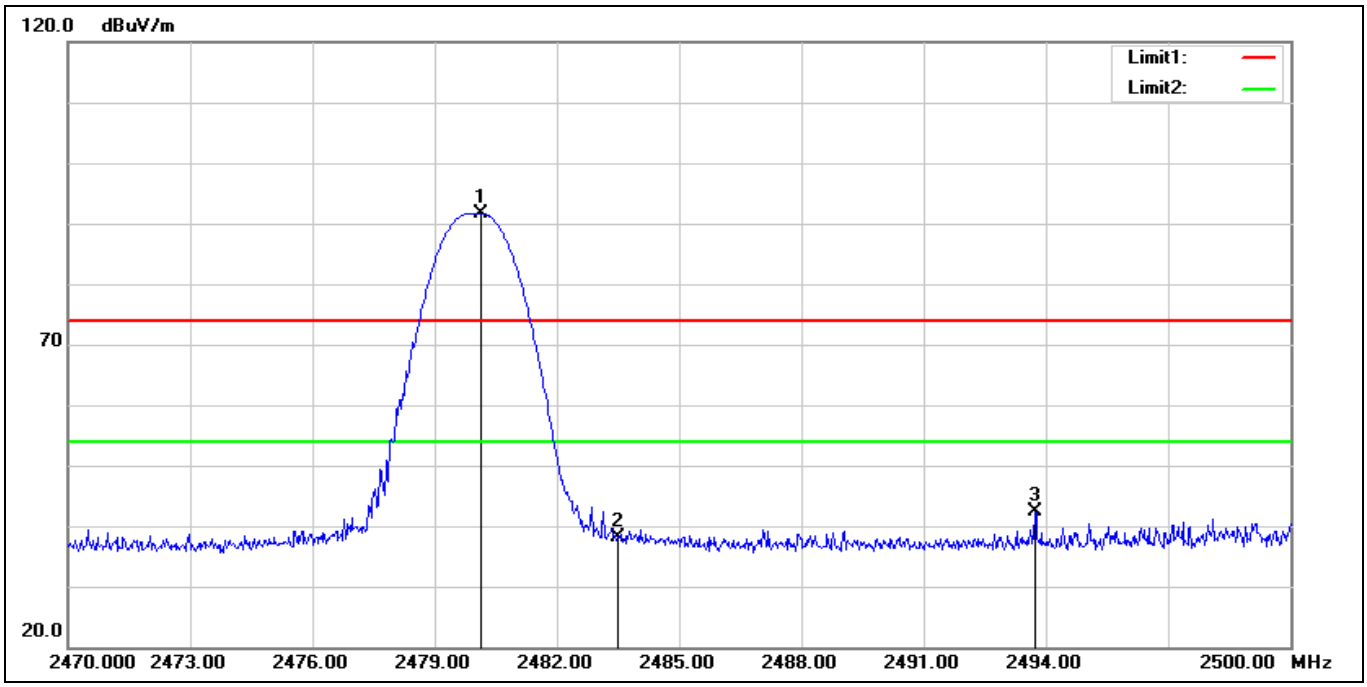

No.	Frequency (MHz)	Reading (dBuV)	Correction (dB/m)	Result (dBuV/m)	Limit (dBuV/m)	Margin (dB)	Remark
1*	2480.140	98.23	-6.58	91.65	74.00	17.65	peak
2	2483.500	44.76	-6.57	38.19	74.00	-35.81	peak
3	2493.730	49.05	-6.59	42.46	74.00	-31.54	peak

Standard:	Part 15C	Test Site:	966 Chamber
Polarization:	Vertical		
Test Mode:	BT_GFSK 2480 MHz		
Remark:			

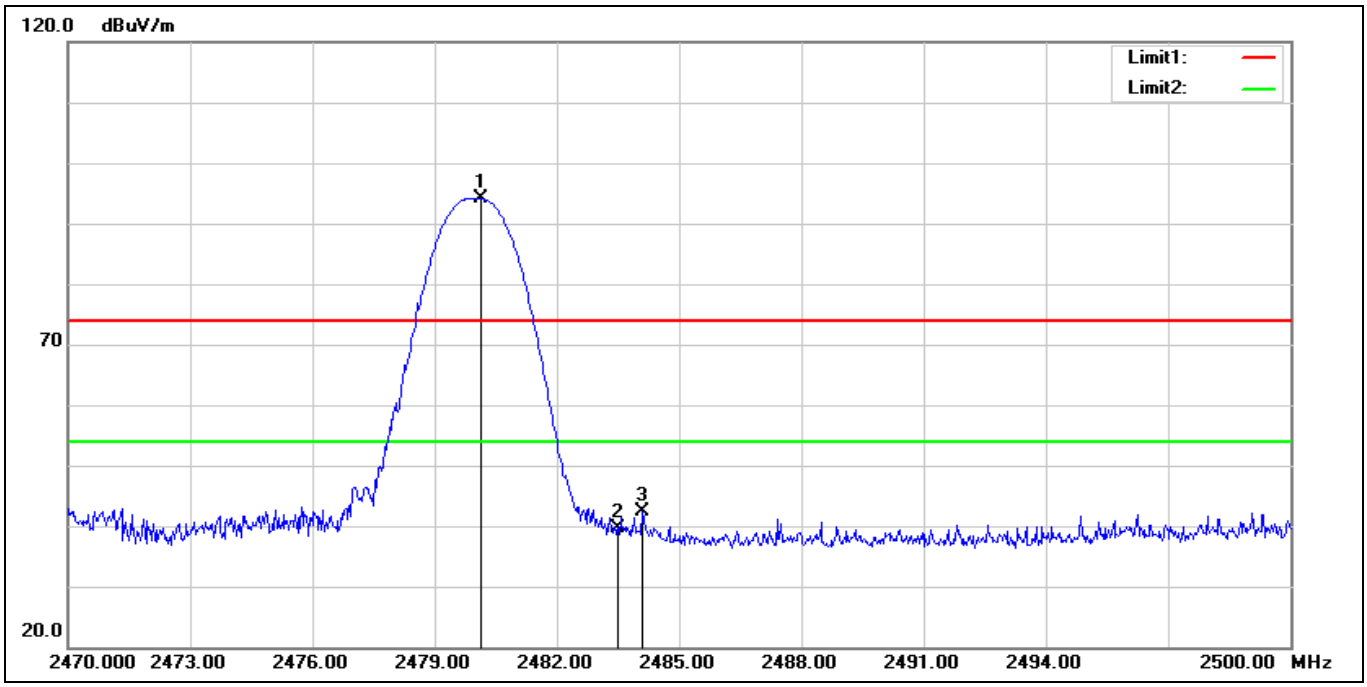

No.	Frequency (MHz)	Reading (dBuV)	Correction (dB/m)	Result (dBuV/m)	Limit (dBuV/m)	Margin (dB)	Remark
1*	2480.140	100.65	-6.58	94.07	74.00	20.07	peak
2	2483.500	46.21	-6.57	39.64	74.00	-34.36	peak
3	2484.100	48.95	-6.57	42.38	74.00	-31.62	peak

Standard:	Part 15C	Test Site:	966 Chamber
Polarization:	Horizontal		
Test Mode:	BT_8DPSK 2402 MHz		
Remark:			

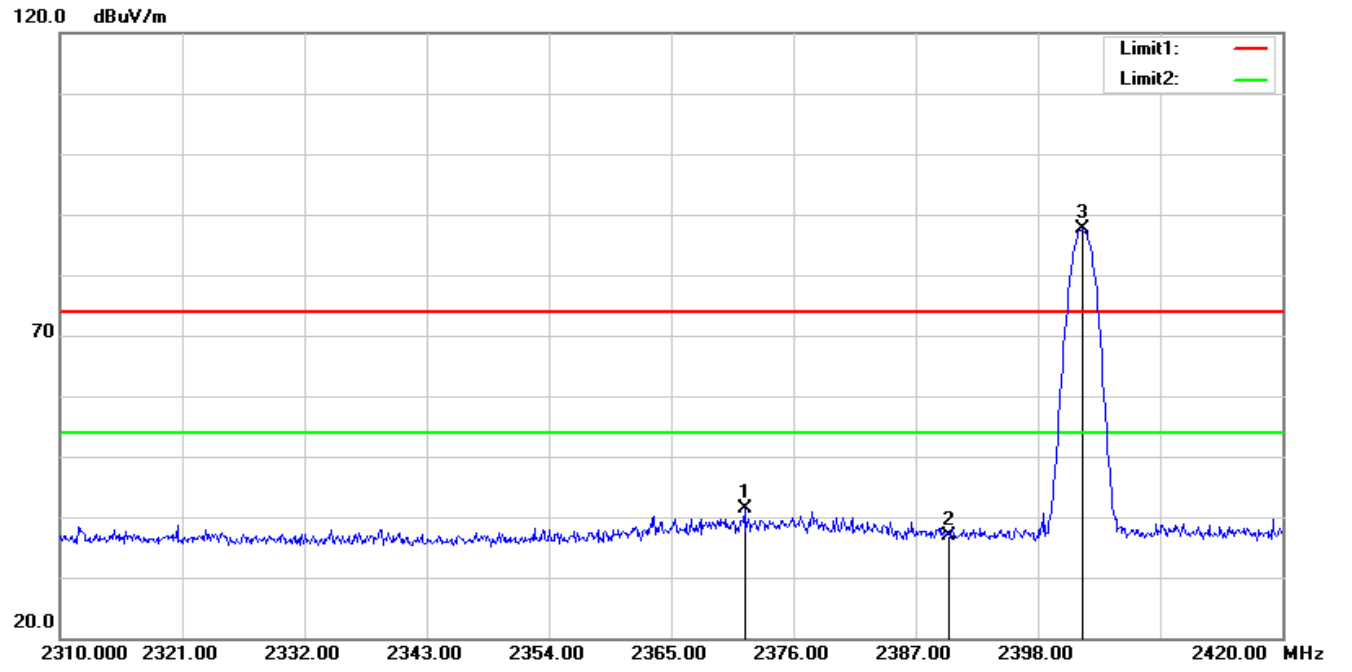

No.	Frequency (MHz)	Reading (dBuV)	Correction (dB/m)	Result (dBuV/m)	Limit (dBuV/m)	Margin (dB)	Remark
1	2371.600	47.85	-6.47	41.38	74.00	-32.62	peak
2	2390.000	43.37	-6.50	36.87	74.00	-37.13	peak
3*	2401.960	94.16	-6.51	87.65	74.00	13.65	peak

Standard:	Part 15C	Test Site:	966 Chamber
Polarization:	Vertical		
Test Mode:	BT_8DPSK 2402 MHz		
Remark:			

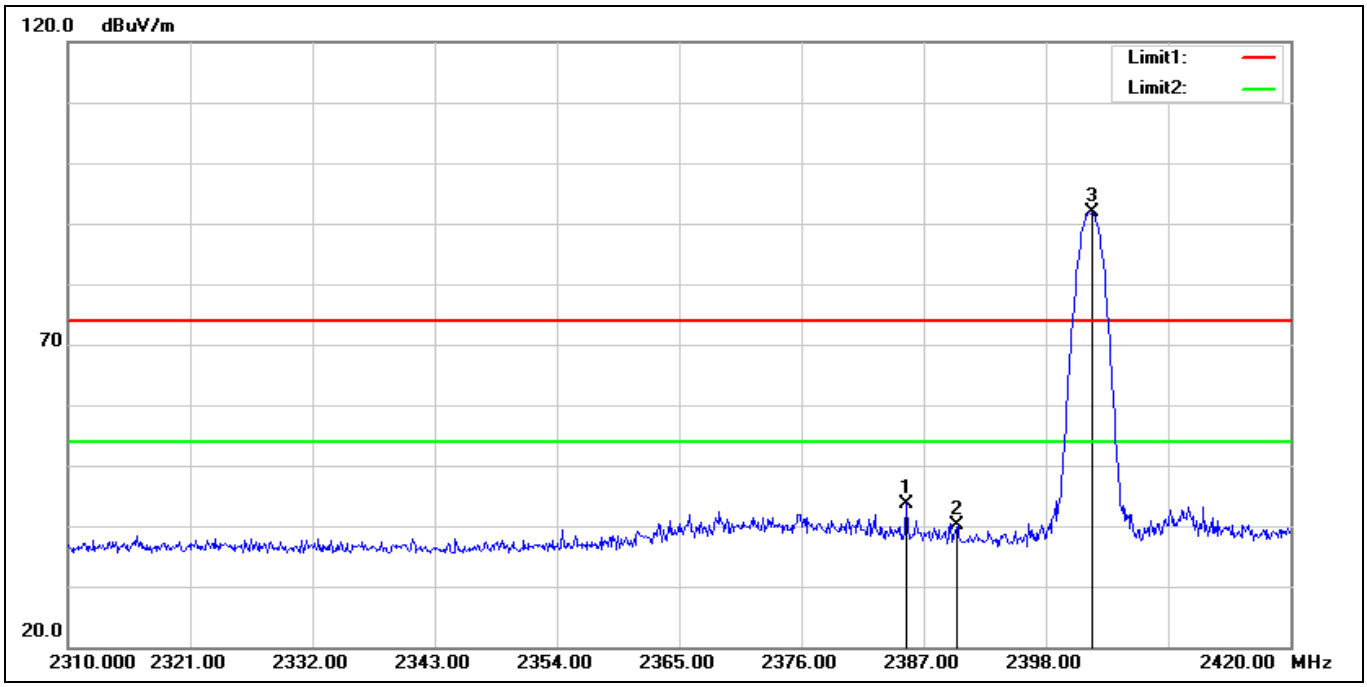

No.	Frequency (MHz)	Reading (dBuV)	Correction (dB/m)	Result (dBuV/m)	Limit (dBuV/m)	Margin (dB)	Remark
1	2385.460	50.21	-6.49	43.72	74.00	-30.28	peak
2	2390.000	46.66	-6.50	40.16	74.00	-33.84	peak
3*	2402.180	98.39	-6.51	91.88	74.00	17.88	peak

Standard:	Part 15C	Test Site:	966 Chamber
Polarization:	Horizontal		
Test Mode:	BT_8DPSK 2480 MHz		
Remark:			

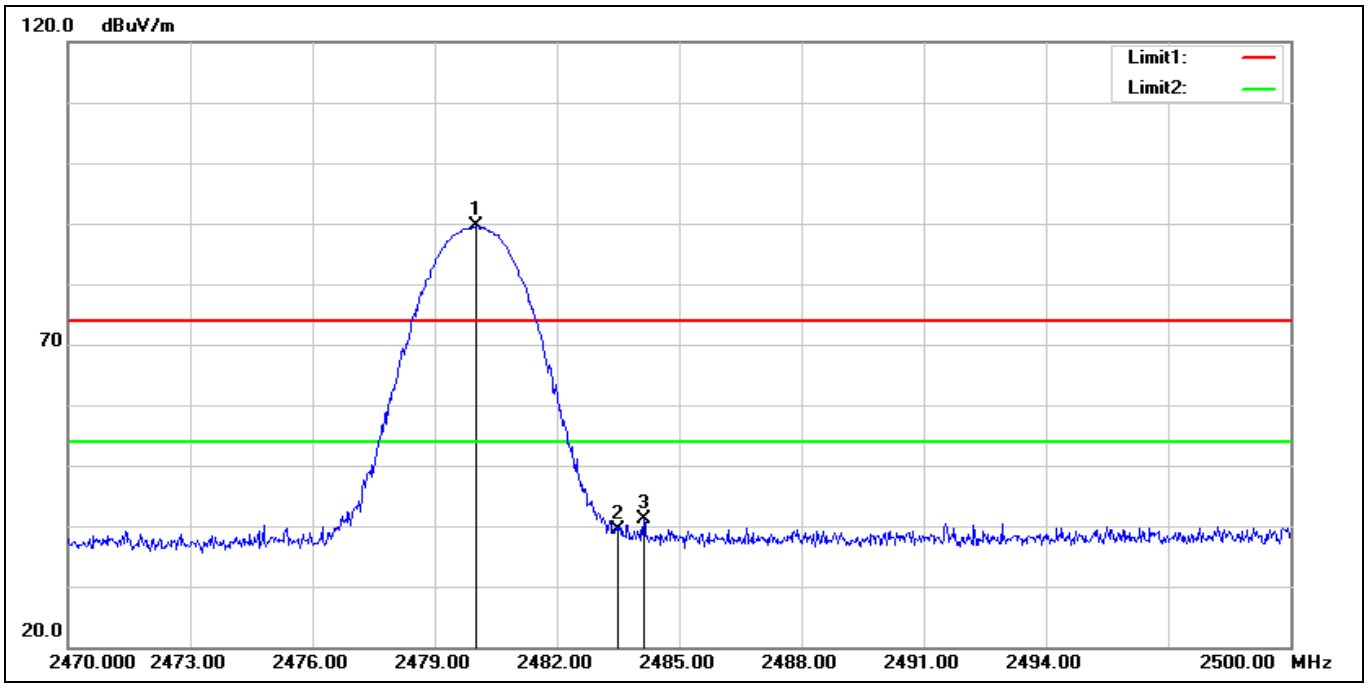

No.	Frequency (MHz)	Reading (dBuV)	Correction (dB/m)	Result (dBuV/m)	Limit (dBuV/m)	Margin (dB)	Remark
1*	2480.020	96.27	-6.58	89.69	74.00	15.69	peak
2	2483.500	45.92	-6.57	39.35	74.00	-34.65	peak
3	2484.130	47.65	-6.57	41.08	74.00	-32.92	peak

Standard:	Part 15C	Test Site:	966 Chamber
Polarization:	Vertical		
Test Mode:	BT_8DPSK 2480 MHz		
Remark:			

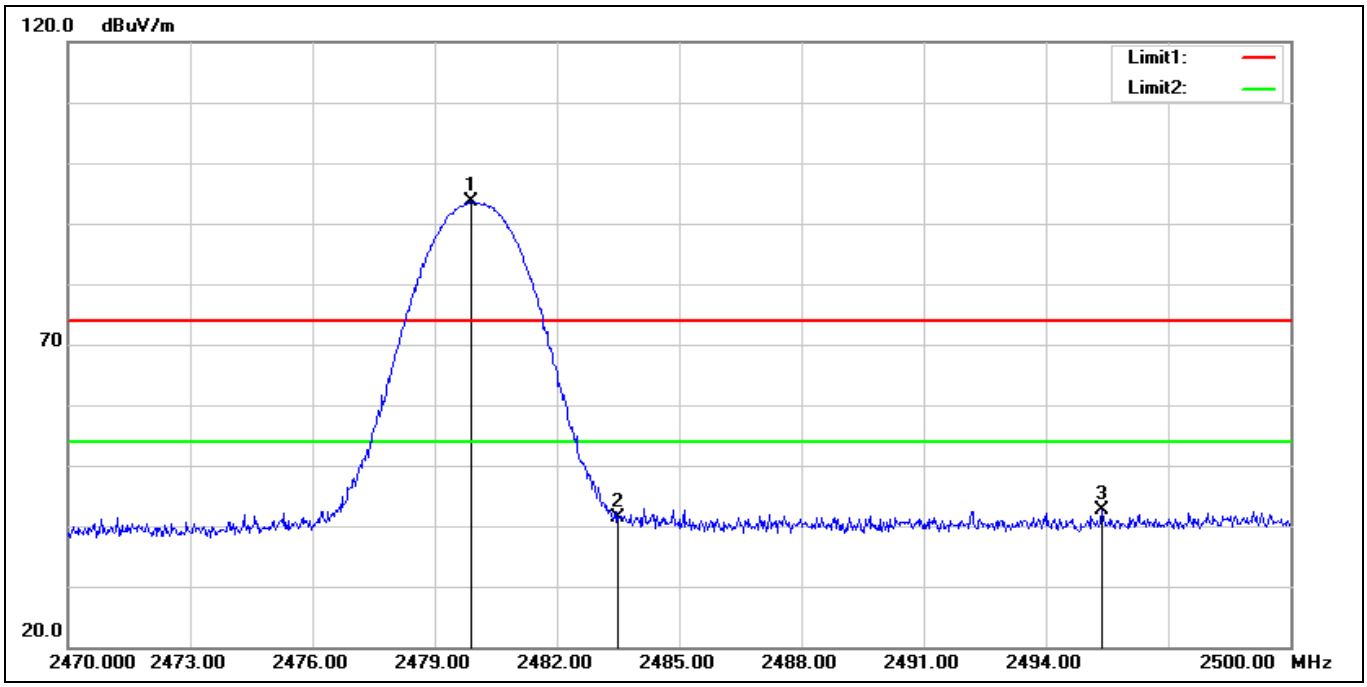

No.	Frequency (MHz)	Reading (dBuV)	Correction (dB/m)	Result (dBuV/m)	Limit (dBuV/m)	Margin (dB)	Remark
1*	2479.900	100.20	-6.58	93.62	74.00	19.62	peak
2	2483.500	48.01	-6.57	41.44	74.00	-32.56	peak
3	2495.380	49.33	-6.58	42.75	74.00	-31.25	peak

Standard:	Part 15C	Test Site:	966 Chamber
Polarization:	Horizontal		
Test Mode:	1M_Hopping		
Remark:			

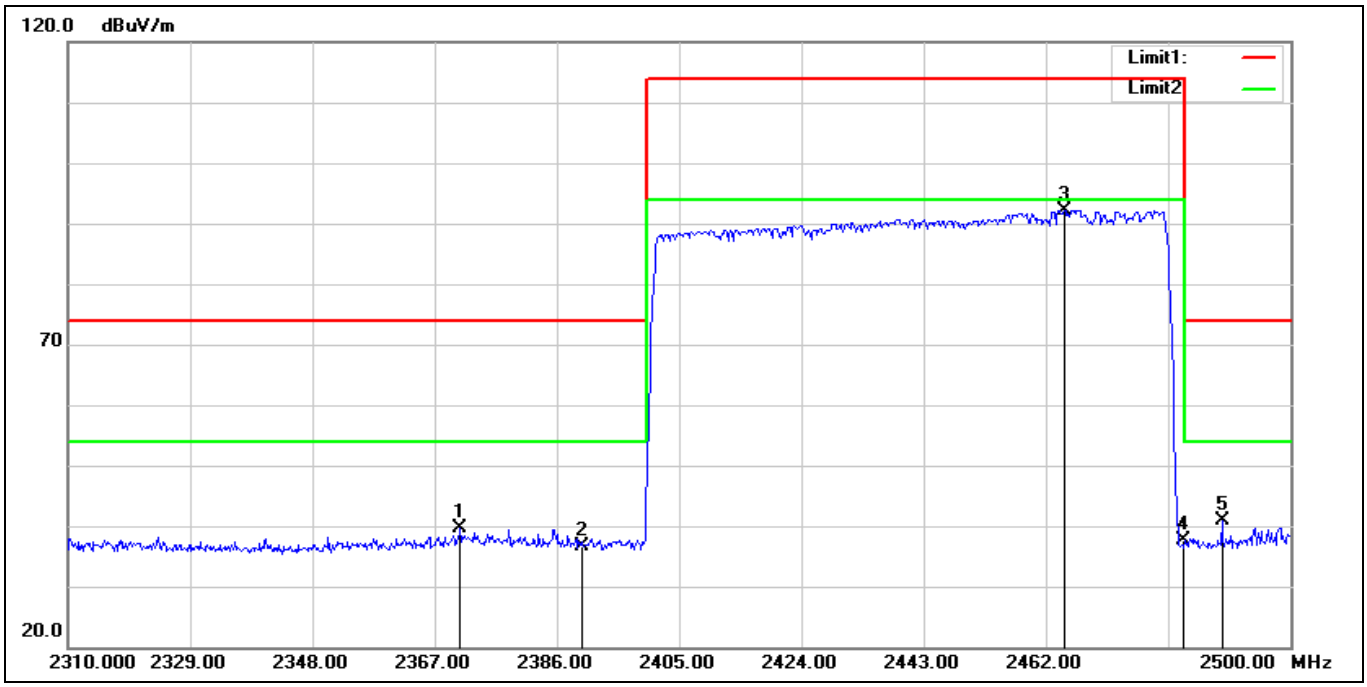

No.	Frequency (MHz)	Reading (dBuV)	Correction (dB/m)	Result (dBuV/m)	Limit (dBuV/m)	Margin (dB)	Remark
1	2370.990	46.00	-6.47	39.53	74.00	-34.47	peak
2	2390.000	43.16	-6.50	36.66	74.00	-37.34	peak
3*	2464.850	98.80	-6.56	92.24	114.00	-21.76	peak
4	2483.500	44.32	-6.57	37.75	74.00	-36.25	peak
5	2489.360	47.46	-6.58	40.88	74.00	-33.12	peak

Standard:	Part 15C	Test Site:	966 Chamber
Polarization:	Vertical		
Test Mode:	1M_Hopping		
Remark:			

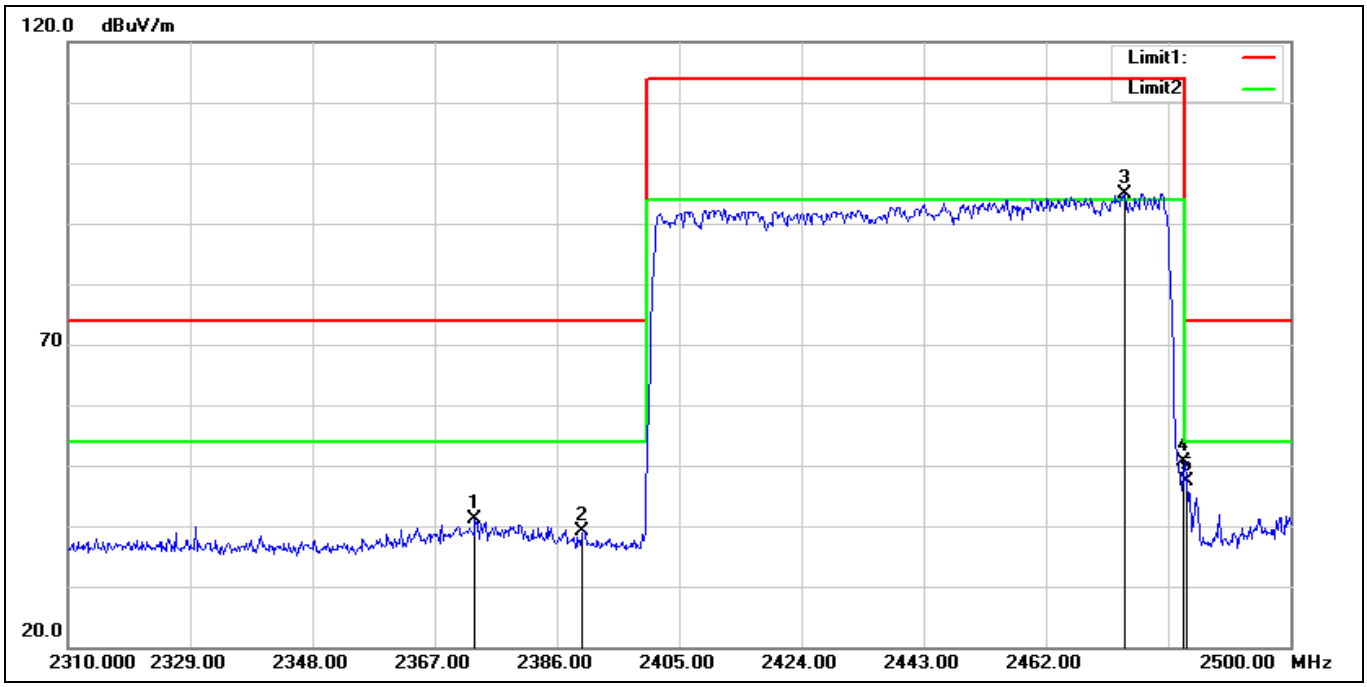

No.	Frequency (MHz)	Reading (dBuV)	Correction (dB/m)	Result (dBuV/m)	Limit (dBuV/m)	Margin (dB)	Remark
1	2373.270	47.60	-6.48	41.12	74.00	-32.88	peak
2	2390.000	45.71	-6.50	39.21	74.00	-34.79	peak
3*	2474.160	101.49	-6.57	94.92	114.00	-19.08	peak
4	2483.500	57.27	-6.57	50.70	74.00	-23.30	peak
5	2483.850	53.93	-6.57	47.36	74.00	-26.64	peak

Standard:	Part 15C	Test Site:	966 Chamber
Polarization:	Horizontal		
Test Mode:	3M_Hopping		
Remark:			

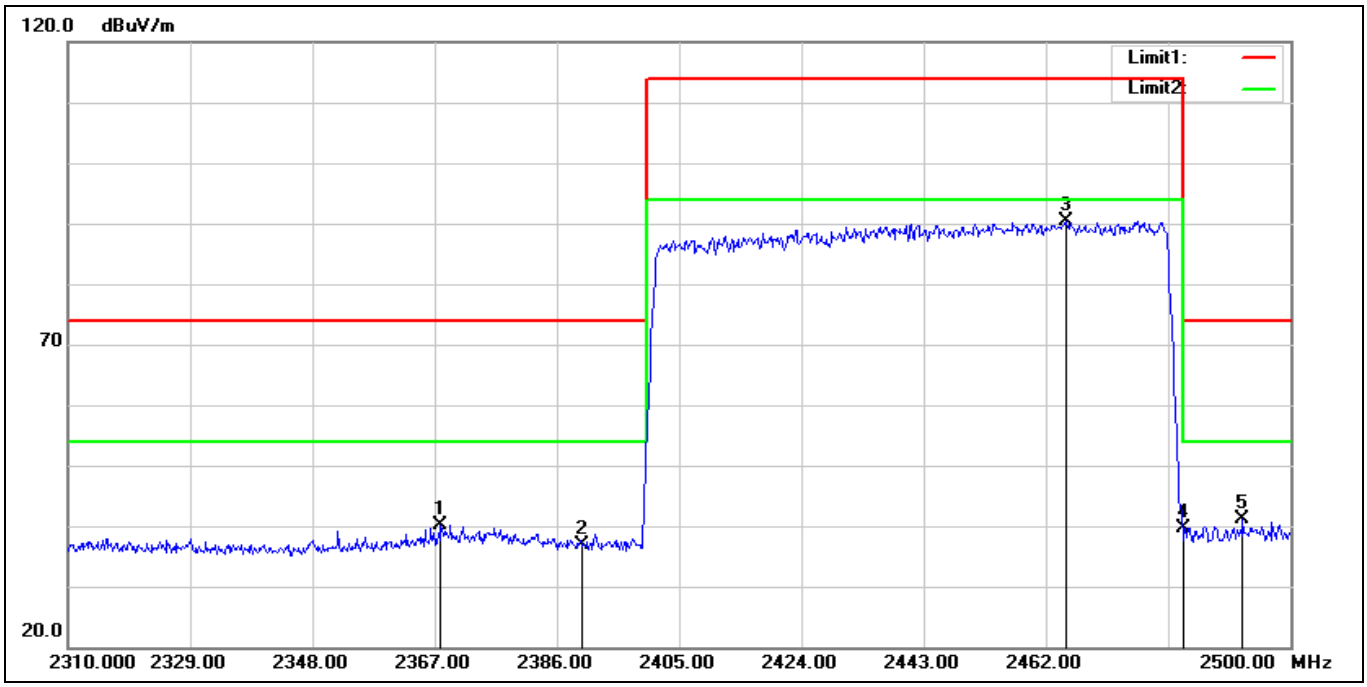

No.	Frequency (MHz)	Reading (dBuV)	Correction (dB/m)	Result (dBuV/m)	Limit (dBuV/m)	Margin (dB)	Remark
1	2367.950	46.58	-6.48	40.10	74.00	-33.90	peak
2	2390.000	43.47	-6.50	36.97	74.00	-37.03	peak
3*	2465.040	97.00	-6.56	90.44	114.00	-23.56	peak
4	2483.500	46.16	-6.57	39.59	74.00	-34.41	peak
5	2492.590	47.60	-6.59	41.01	74.00	-32.99	peak

Standard:	Part 15C	Test Site:	966 Chamber
Polarization:	Vertical		
Test Mode:	3M_Hopping		
Remark:			

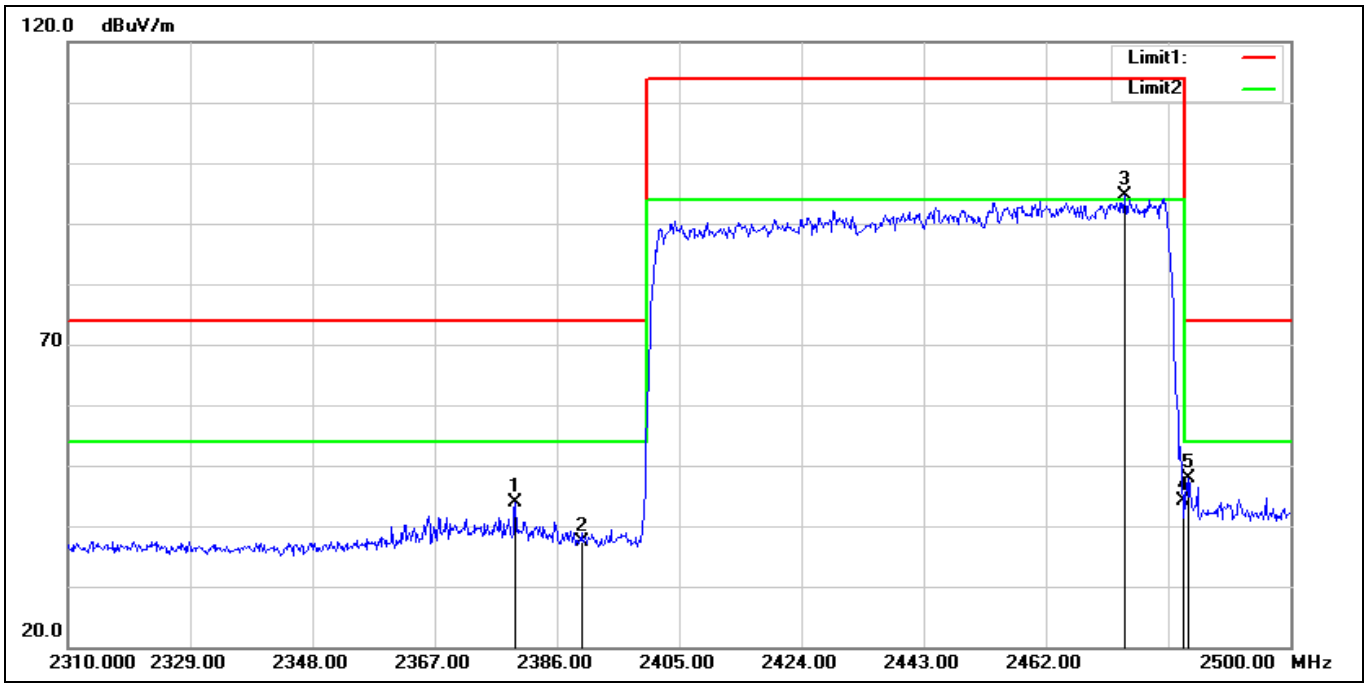

No.	Frequency (MHz)	Reading (dBuV)	Correction (dB/m)	Result (dBuV/m)	Limit (dBuV/m)	Margin (dB)	Remark
1	2379.540	50.33	-6.49	43.84	74.00	-30.16	peak
2	2390.000	43.88	-6.50	37.38	74.00	-36.62	peak
3*	2474.160	101.08	-6.57	94.51	114.00	-19.49	peak
4	2483.500	50.68	-6.57	44.11	74.00	-29.89	peak
5	2484.230	54.50	-6.57	47.93	74.00	-26.07	peak

---END---