Instruction Manual

1. Introduction 1
2. Features 5
3. Block Diagram 6
4. Package Outline and Mounting 6
5. Pin Definition 7
6. Product Pictures 8
7. Key Materials 9
8. General Requirements 9
9. Electrical Characteristics 10
9.1 IEEE 802.11b Section (2.4GHz) 10
9.2 IEEE 802.11g Section (2.4GHz) 11
9.3 IEEE 802.11n HT20/40 Section(2.4GHz) 12
9.4 IEEE 802.11ax HE20/40 Section (2.4GHz) 13
9.5 IEEE 802.11a Section (5GHz) 14
9.6 IEEE 802.11n HT20/40 Section(5GHz) 15
9.7 IEEE 802.11ac VHT20/40 Section(5GHz) 16
9.8 IEEE 802.11ax HE20/40 Section(5GHz) 17
10. Reference Design 18
10.3 Reference schematic 19
11. Mechanical,Environmental and Reliability Tests 20

1. Introduction

- SKI.WB800DS2.1 module is based on AIC8800D solution.SKI.WB800DS2.1 is a Wi-Fi 6 combo low-power, high-performance and high-integrated dual band wireless communication module which is designed for meeting the customers' needs of small size and low cost. This module supports both WLAN functions. Its WLAN function supports the USB 2.0/SDIO 2.0 interface, and the module meets the requirements of standard protocol IEEE 802.11 b/g/n/a/ac/ax. Such units as power management, power amplifier and low-noise amplifier are integrated in the main chip of the module. Its WLAN PHY rate is up to 266.8Mbps@TX. The module can be applied in smart sound boxes, set-top boxes, game machines, printers, IP cameras, tachographs, and other smart equipment. This documentation describes the engineering requirements specification.
- This RF Module have not Bluetooth function.

Warning:

EN

- This device contains licence-exempt transmitter(s)/receiver(s) that comply with Innovation, Science and Economic Development Canada's licence-exempt RSS(s). Operation is subject to the following two conditions:
- 1. This device may not cause interference.
- 2. This device must accept any interference, including interference that may cause undesired operation of the device.
- i. the device for operation in the band 5150–5250 MHz is only for indoor use to reduce the potential for harmful interference to co-channel mobile satellite systems;
- ii. for devices with detachable antenna(s), the maximum antenna gain permitted for devices in the bands 5250-5350 MHz and 5470-5725 MHz shall be such that the equipment still complies with the e.i.r.p. limit;
- iii. for devices with detachable antenna(s), the maximum antenna gain permitted for devices in the band 5725-5850 MHz shall be such that the equipment still complies with the e.i.r.p. limits as appropriate;

This radio transmitter [**30295-K2902**] has been approved by Innovation, Science and Economic Development Canada to operate with the antenna types listed below:

Antenna: External FPC Antenna,
3.7 dBi Gain for 2.4Ghz band,
4.2 dBi Gain for 5GHz band.

Antenna types not included in this list that have a gain greater than the maximum gain indicated for any type listed are strictly prohibited for use with this device.

FR

• cet appareil contient des émetteurs/récepteurs exemptés de licence qui sont conformes aux flux RSS exemptés de licence d'innovation, sciences et développement économique Canada. Le fonctionnement est soumis aux deux conditions suivantes:

- •1. Cet appareil ne peut pas causer d'interférences.
- •2. Cet appareil doit accepter toute interférence, y compris les interférences qui peuvent causer un fonctionnement indésirable de l'appareil.
- •i. Le dispositif pour fonctionner dans la bande 5150-5250 MHz est seulement pour une utilisation à l'intérieur pour réduire le potentiel d'interférence nuisible aux systèmes satellites mobiles co-canaux;
- •ii. Pour les dispositifs à antenne (S) amovible (S), le gain maximal d'antenne permis pour les dispositifs dans les bandes 5250-5350 MHz et 5470-5725 MHz doit être tel que l'équipement respecte toujours la limite de l'e.i.r.p.;
- •iii. Pour les dispositifs à antenne (S) amovible (S), le gain maximal d'antenne permis pour les dispositifs de la bande 5725-5850 MHz doit être tel que l'équipement respecte toujours les limites de l'e.i.r.p. le cas échéant;

Cet émetteur radio [30295-K2902] a été approuvé par Innovation, sciences et développement économique Canada pour fonctionner avec les types d'antennes énumérés ci-dessous:

Antenne: externe FPC antenne,

3.7 dBi Gain pour la bande 2.4Ghz,

4.2 dBi Gain pour la bande 5GHz.

Les types d'antennes non inclus dans cette liste qui ont un gain supérieur au gain maximum indiqué pour tout type listé sont strictement interdits pour une utilisation avec cet appareil.

This device complies with Part 15 of the FCC Rules Operation is subject to the following two conditions:

(1) this device may not cause harmful interference, and

(2) this device must accept any interference received, including interference that may cause undesired operation.

Caution: Changes or modifications not expressly approved by the party responsible for compliance could void the user's authority to operate the equipment.

Note: This equipment has been tested and found to comply with the limits for a Class B digital device, pursuant to part 15 of the FCC Rules. These limits are designed to provide reasonable protection against harmful interference in a residential installation. This equipment generates, uses and can radiate radio frequency energy and, if not installed and used in accordance with the instructions, may cause harmful interference to radio communications. However, there is no guarantee that interference will not occur in a particular installation. If this equipment does cause harmful interference to radio or television reception, which can be determined by turning the equipment off and on, the user is encouraged to try to correct the interference by one or more of the following measures:

—Reorient or relocate the receiving antenna.

—Increase the separation between the equipment and receiver.

—Connect the equipment into an outlet on a circuit different from that to which the receiver is connected.

—Consult the dealer or an experienced radio/TV technician for help.

- To satisfy FCC / IC RF exposure requirements, a separation distance of 20 cm or more should be maintained between the antenna of this device and persons during device operation. To ensure compliance, operations at closer than this distance is not recommended.

To ensure compliance, operations at closer than this distance is not recommended

Antenna Change Notice to Host manufacturer

If you desire to increase antenna gain and either change antenna type or use same antenna type certified, a Class II permissive change application is required to be filed by us, or you (host manufacturer) can take responsibility through.

Unique Identifier	
Model Number	SKI.WB800DS2.1
Trade Name	NA
FCC Compliance Statement	
This device complies with part 15 of the FCC Rules. Operation is subject to the following two conditions: (1) This device may not cause harmful interference, and (2) this device must accept any interference received, including interference that may cause undesired operation.	
Responsible Party – U.S. Contact Information	
Company:	FCC US Agent,LLC
Address:	3722 llinois Avenue,Saint Charles,IL, 60174,USA
Telephone or internet contact information:	TEL：708-571-3148 Email:Support@FCCUSAgent.com

2. Features

Reserving System	IEEE Std. 802.11a
	IEEE Std. 802.11b
	IEEE Std. 802.11g
	IEEE Std. 802.11n
	IEEE Std. 802.11ac
	IEEE Std. 802.11ax
Chip Solution	AIC8800D
Band	2.4GHz/5GHz
Bandwidth	20/40M
Dimensions	12mm×12mm×1.8mm
Remark	--

Modle	Install way	standard	Data rate (MAX)	Frequencyband	Antenna interface	remark
SKI.WB800DS2.1	SMD	IEEE 802.11a/b/g/n/ac/ax	229Mbps@RX 266.8*Mbps*@TX	2.4GHz 5GHz	Stamp hole *1 Compatible stamp holes *2	

3. Block Diagram

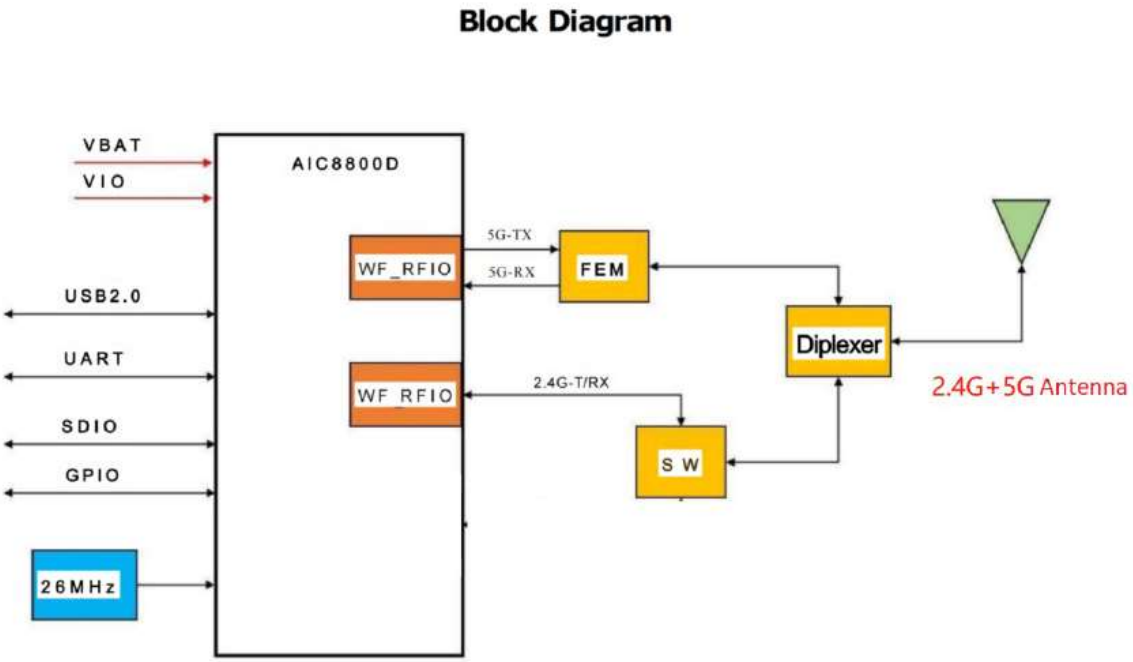

Figure 1 Block Diagram

4. Package Outline and Mounting

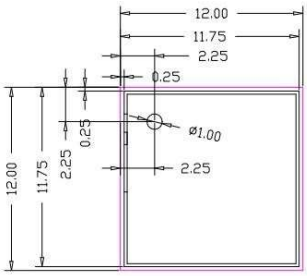

模组俯视图

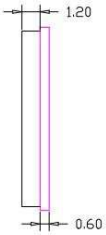

模组侧视图

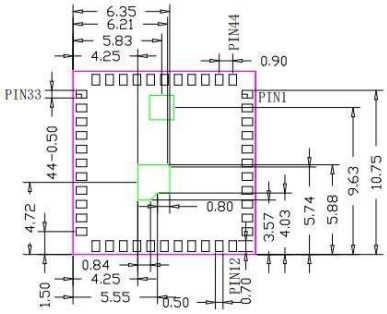

模组底视图

5. Pin Definition

PIN	SYMBOL	DESCRIPTION
1	GND	Connected to Ground
2	WLAN_ANT	WIFI(2.4G+5G)
3	GND	Connected to Ground
4	NC	NC
5	NC	-
6	GPIOB5	GPIO
7	GPIOB3	GPIO
8	NC	-
9	VBAT	3.3V
10	USB_DM	USB_DM
11	USB_DP	USB_DP
12	PWR_KEY	PWR_KEY
13	HOST_WAKE_WIFI	WIFI
14	SDIO_D2	I/O
15	SDIO_D3	I/O
16	SDIO_CMD	I/O
17	SDIO_CLK	I/O
18	SDIO_D0	I/O
19	SDIO_D1	I/O
20	GND	Connected to Ground
21	NC	-
22	VIO	3.3V/1.8V
23	NC	-
24	GPIOB2/WiFi_HOST_WAKE	GPIO/WiFi
25	NC	-
26	NC	-
27	NC	-
28	NC	-
29	UART0_TX	I/O
30	UART0_RX	I/O

31	GND	Connected to Ground
32	NC	-
33	GND	Connected to Ground
34	GPIOB7	GPIO
35	GPIOB6	GPIO
36	GND	Connected to Ground
37	NC	-
38	NC	-
39	NC	-
40	NC	-
41	UART1_RTS	I/O
42	UART1_TX	I/O
43	UART1_RX	I/O
44	UART1_CTS	I/O

6. Product Pictures

机型	CVTE 料号	说明
SKI.WB800DS2.1	002.029.0000791	LGA 封装输出：单天线，WiFi 天线配置

7. Key Materials

Number	Key name	Modle	Specifications Materials	remark
1	Integrated circuit	AIC8800D	QFN48	AIC
2	PCB	SKI.WB800DS2.1	FR-4,2LAY	
3	FEM	CB5717	5.15~5.9GHz	
4	duplexer	SLFD18-5R950G-07T	4900~5950MHz,0.6dB 2400~2500MHz,0.4dB	
5	Radio-frequency switch	WS7872DA-6/TR	2channel,0.1 ~ 6GHz	
6	Crystal oscillator	CN4026M00012T2115181	26MHz	

8. General Requirements

No.	Feature	Description
8-1	Operation Voltage	3.3V±0.3
8-2	Current Consumption	600mA
8-3	Ripple	≤120mV
8-4	Operation Temperature	-10°C to +60°C
8-5	Antenna Type	External antenna
8-6	Interface	SDIO 2.0/USB2.0/UART 接口
8-7	Storage Temperature	-40°C to +85°C

***RF Power Configuration Requirements**

txpwr_index_2.4g:
[0]=10(ofdmlowrate)
[1]=9(ofdm64qam)
[2]=9(ofdm256qam)
[3]=7(ofdm1024qam)
[4]=9(dsss)

txpwr_index_5g:
[0]=9(ofdmlowrate)
[1]=9(ofdm64qam)
[2]=9(ofdm256qam)
[3]=8(ofdm1024qam)

9. Electrical Characteristics

Electrical code tests are carried out under the following conditions: ambient temperature: 25℃±5℃;
Power supply voltage: module input voltage 3.3V (±10%);
The Test for electrical specification was performed under the following condition unless otherwise specified.
Ambient condition Temperature :25℃ ± 5℃;
Power supply voltages: 3.3V (±10%) input power at the Module;

9.1 IEEE 802.11b Section (2.4GHz)

Items	Contents				
Specification	IEEE802.11b@2.4GHz				
Mode	CCK				
Channel	CH1 to CH11				
Data rate	1, 2, 5.5, 11Mbps				
TX Characteristics	Min.	Typ.	Max.	Unit	Remark
1. Power Levels at each rate (1Mbps~11Mbps)	14.0	16.0	18.0	dBm	
2. Spectrum Mask @ target power					
1) fc ±11MHz to ±22MHz	-	-	-30	dBr	
2) fc > ±22MHz	-	-	-50	dBr	
3. Constellation Error(EVM)@ target power					
1) 1Mbps	-	-	-9.11	dB	
2) 2Mbps	-	-	-9.11	dB	
3) 5.5Mbps	-	-	-9.11	dB	
4) 11Mbps	-	-	-9.11	dB	
4. Frequency Error	-20	-	20	ppm	
RX Characteristics	Min.	Typ.	Max.	Unit	
5. Minimum Input Level Sensitivity					
1) 1Mbps (FER ≦8%)	-	-	-83	dBm	
2) 2Mbps (FER ≦8%)	-	-	-80	dBm	
3) 5.5Mbps (FER ≦8%)	-	-	-79	dBm	
4) 11Mbps (FER ≦8%)	-	-	-76	dBm	
6. Maximum Input Level (FER ≦8%)	-10	-	-	dBm	

9.2 IEEE 802.11g Section (2.4GHz)

Items	Contents				
Specification	IEEE802.11g@2.4GHz				
Mode	OFDM				
Channel	CH1 to CH11				
Data rate	6, 9, 12, 18, 24, 36, 48, 54Mbps				
TX Characteristics	Min.	Typ.	Max.	Unit	Remark
1. Power Levels					
1) For antenna port（54M）	12.0	14.0	16.0	dBm	
2. Spectrum Mask @ target power					
1) at fc +/-11MHz	-	-	-20	dBr	
2) at fc +/-20MHz	-	-	-28	dBr	
3) at fc > +/-30MHz	-	-	-40	dBr	
3 Constellation Error(EVM)@ target power					
1) 6Mbps	-	-	-5	dB	
2) 9Mbps	-	-	-8	dB	
3) 12Mbps	-	-	-10	dB	
4) 18Mbps	-	-	-13	dB	
5) 24Mbps	-	-	-16	dB	
6) 36Mbps	-	-	-19	dB	
7) 48Mbps	-	-	-22	dB	
8) 54Mbps	-	-	-25	dB	
4 Frequency Error	-20	-	20	ppm	
RX Characteristics	Min.	Typ.	Max.	Unit	
5 Minimum Input Level Sensitivity					
1) 6Mbps (PER ≦10%)	-	-	-85	dBm	
2) 9Mbps (PER ≦10%)	-	-	-84	dBm	
3) 12Mbps (PER ≦10%)	-	-	-82	dBm	
4) 18Mbps (PER ≦10%)	-	-	-80	dBm	
5) 24Mbps (PER ≦10%)	-	-	-77	dBm	
6) 36Mbps (PER ≦10%)	-	-	-73	dBm	
7) 48Mbps (PER ≦10%)	-	-	-69	dBm	
8) 54Mbps (PER ≦10%)	-	-	-65	dBm	

9.3 IEEE 802.11n HT20/40 Section(2.4GHz)

Items	Contents					
Specification	IEEE802.11n HT20/40@2.4GHz					
Mode	OFDM					
Channel	HT20:CH1 to CH11 HT40:CH3 to CH9					
Data rate (MCS index)	MCS0/1/2/3/4/5/6/7					
TX Characteristics	Min.	Typ.	Max.		Unit	
1. Power Levels (Calibrated)						
1) For antenna port（MCS7）	12.0	14.0	16.0		dBm	
2. Spectrum Mask @target power						
1) at fc +/-22MHz	-	-	-20		dBr	
2) at fc +/-40MHz	-	-	-28		dBr	
3) at fc > +/-60MHz	-	-	-45		dBr	
3. Constellation Error(EVM)@ target power						
1) MCS0	-	-	-5		dB	
2) MCS1	-	-	-10		dB	
3) MCS2	-	-	-13		dB	
4) MCS3	-	-	-16		dB	
5) MCS4	-	-	-19		dB	
6) MCS5	-	-	-22		dB	
7) MCS6	-	-	-25		dB	
8) MCS7	-	-	-28		dB	
4. Frequency Error	-20	-	20		ppm	
RX Characteristics	Min.	Typ.	Max.		Unit	
5. Minimum Input Level Sensitivity			HT20	HT40		
1) MCS0 (PER ≦10%)	-	-	-82	-79	dBm	
2) MCS1 (PER ≦10%)	-	-	-79	-76	dBm	
3) MCS2 (PER ≦10%)	-	-	-77	-74	dBm	
4) MCS3 (PER ≦10%)	-	-	-74	-71	dBm	
5) MCS4 (PER ≦10%)	-	-	-70	-67	dBm	
6) MCS5 (PER ≦10%)	-	-	-66	-63	dBm	
7) MCS6 (PER ≦10%)	-	-	-65	-62	dBm	
8) MCS7 (PER ≦10%)	-	-	-64	-61	dBm	
6. Maximum Input Level (PER ≦10%)	-20	-	-		dBm	

9.4 IEEE 802.11ax HE20/40 Section (2.4GHz)

Items	Contents					
Specification	IEEE802.11ax HE20/40@2.4GHz					
Mode	OFDMA					
Channel	HE20:CH1 to CH11 HE40:CH3 to CH9					
Data rate (MCS index)	MCS0/1/2/3/4/5/6/7/8/9					
TX Characteristics	Min.	Typ.	Max.		Unit	
1. Power Levels (Calibrated)						
1) For antenna port（MCS9）	12.0	14.0	16.0		dBm	
2. Spectrum Mask @VHT20/VHT40/VHT80 target power						
1) at fc +/-11MHz/21MHz/41MHz	-	-	-20		dBr	
2) at fc +/-20MHz/40MHz/80MHz	-	-	-28		dBr	
3) at fc +/-30MHz/60MHz/120MHz	-	-	-40		dBr	
3. Constellation Error(EVM)@ target power						
1) MCS0	-	-	-5		dB	
2) MCS1	-	-	-10		dB	
3) MCS2	-	-	-13		dB	
4) MCS3	-	-	-16		dB	
5) MCS4	-	-	-19		dB	
6) MCS5	-	-	-22		dB	
7) MCS6	-	-	-25		dB	
8) MCS7	-	-	-27		dB	
9) MCS8	-	-	-30		dB	
10) MCS9	-	-	-32		dB	
4. Frequency Error	-20	-	20		ppm	
RX Characteristics	Min.	Typ.	Max.		Unit	
5.Minimum Input Level Sensitivity			HE20	HE40		
1) MCS0 (PER ≦10%)	-	-	-82	-79	dBm	
2) MCS1 (PER ≦10%)	-	-	-79	-76	dBm	
3) MCS2 (PER ≦10%)	-	-	-77	-74	dBm	
4) MCS3 (PER ≦10%)	-	-	-74	-71	dBm	
5) MCS4 (PER ≦10%)	-	-	-70	-67	dBm	
6) MCS5 (PER ≦10%)	-	-	-66	-63	dBm	
7) MCS6 (PER ≦10%)	-	-	-65	-62	dBm	
8) MCS7 (PER ≦10%)	-	-	-64	-61	dBm	
9) MCS8(PER ≦10%)	-	-	-59	-56	dBm	
10) MCS9(PER ≦10%)	-	-	-57	-54	dBm	
6. Maximum Input Level (PER ≦10%)	-30	-	-		dBm	

9.5 IEEE 802.11a Section (5GHz)

Items	Contents				
Specification	IEEE802.11a@5GHz				
Mode	OFDM				
Channel	CH36 to CH48, CH149 to CH165				
Data rate (MCS index)	6, 9, 12, 18, 24, 36, 48, 54Mbps				
TX Characteristics	Min.	Typ.	Max.	Unit	
1. Power Levels (Calibrated)					
1) For antenna port（6M~36M）	9.0	11.0	13.0	dBm	
2) For antenna port（48M~54M）	7.0	9.0	11.0	dBm	
2. Spectrum Mask @VHT20/VHT40/VHT80 target power					
1) at fc +/-11MHz/21MHz/41MHz	-	-	-20	dBr	
2) at fc +/-20MHz/40MHz/80MHz	-	-	-28	dBr	
3) at fc +/-30MHz/60MHz/120MHz	-	-	-40	dBr	
3. Constellation Error(EVM)@ target power					
4) MCS3	-	-	-16	dB	
5) MCS4	-	-	-19	dB	
6) MCS5	-	-	-22	dB	
7) MCS6	-	-	-25	dB	
8) MCS7	-	-	-27	dB	
9) MCS8	-	-	-30	dB	
10) MCS9	-	-	-32	dB	
4. Frequency Error	-20	-	20	ppm	
RX Characteristics	Min.	Typ.	Max.	Unit	
5.Minimum Input Level Sensitivity					
1) 6Mbps (PER ≦10%)	-	-	-82	dBm	
2) 9Mbps (PER ≦10%)	-	-	-81	dBm	
3) 12Mbps (PER ≦10%)	-	-	-79	dBm	
4) 18Mbps (PER ≦10%)	-	-	-77	dBm	
5) 24Mbps (PER ≦10%)	-	-	-74	dBm	
6) 36Mbps (PER ≦10%)	-	-	-70	dBm	
7) 48Mbps (PER ≦10%)	-	-	-66	dBm	
8) 54Mbps (PER ≦10%)	-	-	-65	dBm	
6. Maximum Input Level (PER ≦10%)	-30	-	-	dBm	

9.6 IEEE 802.11n HT20/40 Section(5GHz)

Items	Contents					
Specification	IEEE802.11n HT20/40@5GHz					
Mode	OFDM					
Channel	HT20:CH36 to CH48, CH149 to CH165 HT40:CH38 to CH46, CH151 to CH159					
Data rate (MCS index)	MCS0/1/2/3/4/5/6/7					
TX Characteristics	Min.	Typ.	Max.		Unit	
1. Power Levels (Calibrated)						
1) For antenna port（MCS0~MCS4）	9.0	11.0	13.0		dBm	
2) For antenna port（MCS5~MCS7）	7.0	9.0	11.0		dBm	
2. Spectrum Mask @target power						
1) at fc +/-11MHz	-	-	-20		dBr	
2) at fc +/-20MHz	-	-	-28		dBr	
3) at fc > +/-30MHz	-	-	-45		dBr	
3. Constellation Error(EVM)@ target power						
1) MCS0	-	-	-5		dB	
2) MCS1	-	-	-10		dB	
3) MCS2	-	-	-13		dB	
4) MCS3	-	-	-16		dB	
5) MCS4	-	-	-19		dB	
6) MCS5	-	-	-22		dB	
7) MCS6	-	-	-25		dB	
8) MCS7	-	-	-28		dB	
4. Frequency Error	-20	-	20		ppm	
RX Characteristics	Min.	Typ.	Max.		Unit	
6. Minimum Input Level Sensitivity (each chain)			HT20	HT40		
1) MCS0 (PER ≦10%)	-	-	-82	-79	dBm	
2) MCS1 (PER ≦10%)	-	-	-79	-76	dBm	
3) MCS2 (PER ≦10%)	-	-	-77	-74	dBm	
4) MCS3 (PER ≦10%)	-	-	-74	-71	dBm	
5) MCS4 (PER ≦10%)	-	-	-70	-67	dBm	
6) MCS5 (PER ≦10%)	-	-	-66	-63	dBm	
7) MCS6 (PER ≦10%)	-	-	-65	-62	dBm	
8) MCS7 (PER ≦10%)	-	-	-64	-61	dBm	
6. Maximum Input Level (PER ≦10%)	-30	-	-		dBm	

9.7 IEEE 802.11ac VHT20/40 Section(5GHz)

Items	Contents					
Specification	IEEE802.11ac VHT20/40@5GHz					
Mode	OFDM					
Channel	VHT20: CH36 to CH48, CH149 to CH165 VHT40: CH38 to CH46, CH151 to CH159					
Data rate (MCS index)	MCS0/1/2/3/4/5/6/7/8/9					
TX Characteristics	Min.	Typ.	Max.		Unit	
1. Power Levels (Calibrated)						
1) For antenna port（MCS0~MCS4）	9.0	11.0	13.0		dBm	
2) For antenna port（MCS5~MCS9）	7.0	9.0	11.0		dBm	
2. Spectrum Mask @VHT20/VHT40/VHT80 target power						
1) at fc +/-11MHz/21MHz/41MHz	-	-	-20		dBr	
2) at fc +/-20MHz/40MHz/80MHz	-	-	-28		dBr	
3) at fc +/-30MHz/60MHz/120MHz	-	-	-40		dBr	
3. Constellation Error(EVM)@ target power						
1) MCS0	-	-	-5		dB	
2) MCS1	-	-	-10		dB	
3) MCS2	-	-	-13		dB	
4) MCS3	-	-	-16		dB	
5) MCS4	-	-	-19		dB	
6) MCS5	-	-	-22		dB	
7) MCS6	-	-	-25		dB	
8) MCS7	-	-	-27		dB	
9) MCS8	-	-	-30		dB	
10) MCS9	-	-	-32		dB	
4. Frequency Error	-20	-	20		ppm	
RX Characteristics	Min.	Typ.	Max.		Unit	
5.Minimum Input Level Sensitivity			VHT20	VHT40		
1) MCS0 (PER ≦10%)	-	-	-82	-79	dBm	
2) MCS1 (PER ≦10%)	-	-	-79	-76	dBm	
3) MCS2 (PER ≦10%)	-	-	-77	-74	dBm	
4) MCS3 (PER ≦10%)	-	-	-74	-71	dBm	
5) MCS4 (PER ≦10%)	-	-	-70	-67	dBm	
6) MCS5 (PER ≦10%)	-	-	-66	-63	dBm	
7) MCS6 (PER ≦10%)	-	-	-65	-62	dBm	
8) MCS7 (PER ≦10%)	-	-	-64	-61	dBm	
9) MCS8(PER ≦10%)	-	-	-59	-56	dBm	
10) MCS9(PER ≦10%)	-	-	-57	-54	dBm	
6. Maximum Input Level (PER ≦10%)	-30	-	-		dBm	

9.8 IEEE 802.11ax HE20/40 Section(5GHz)

Items	Contents					
Specification	IEEE802.11ax HE20/40@5GHz					
Mode	OFDMA					
Channel	HE20: CH36 to CH48, CH149 to CH165 HE40: CH38 to CH46, CH151 to CH159					
Data rate (MCS index)	MCS0/1/2/3/4/5/6/7/8/9					
TX Characteristics	Min.	Typ.	Max.		Unit	
1. Power Levels (Calibrated)						
1) For antenna port（MCS0~MCS4）	9.0	11.0	13.0		dBm	
2) For antenna port（MCS5~MCS9）	7.0	9.0	11.0		dBm	
2. Spectrum Mask @VHT20/VHT40/VHT80 target power						
1) at fc +/-11MHz/21MHz/41MHz	-	-	-20		dBr	
2) at fc +/-20MHz/40MHz/80MHz	-	-	-28		dBr	
3) at fc +/-30MHz/60MHz/120MHz	-	-	-40		dBr	
3. Constellation Error(EVM)@ target power						
1) MCS0	-	-	-5		dB	
2) MCS1	-	-	-10		dB	
3) MCS2	-	-	-13		dB	
4) MCS3	-	-	-16		dB	
5) MCS4	-	-	-19		dB	
6) MCS5	-	-	-22		dB	
7) MCS6	-	-	-25		dB	
8) MCS7	-	-	-27		dB	
9) MCS8	-	-	-30		dB	
10) MCS9	-	-	-32		dB	
4. Frequency Error	-20	-	20		ppm	
RX Characteristics	Min.	Typ.	Max.		Unit	
5.Minimum Input Level Sensitivity			HE20	HE40		
1) MCS0 (PER ≦10%)	-	-	-82	-79	dBm	
2) MCS1 (PER ≦10%)	-	-	-79	-76	dBm	
3) MCS2 (PER ≦10%)	-	-	-77	-74	dBm	
4) MCS3 (PER ≦10%)	-	-	-74	-71	dBm	
5) MCS4 (PER ≦10%)	-	-	-70	-67	dBm	
6) MCS5 (PER ≦10%)	-	-	-66	-63	dBm	
7) MCS6 (PER ≦10%)	-	-	-65	-62	dBm	
8) MCS7 (PER ≦10%)	-	-	-64	-61	dBm	
9) MCS8(PER ≦10%)	-	-	-59	-56	dBm	
10) MCS9(PER ≦10%)	-	-	-57	-54	dBm	
6. Maximum Input Level (PER ≦10%)	-30	-	-		dBm	

10. Reference Design

10.1 Timing specification

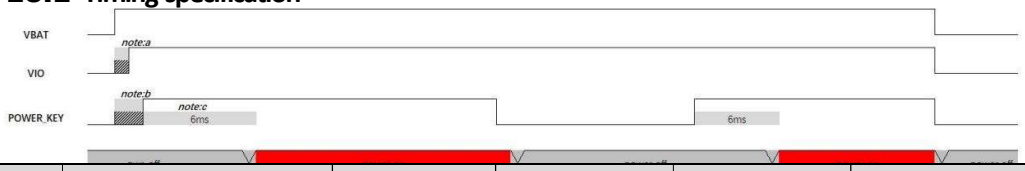

Symbol	Description	conditions	Min.	Typ.	Max.	Unit
VDD33	Power supplies	-	3.0	3.3	3.6	V
VDDIO	I/O input power supplies	-	3.0	3.3	3.6	V
			1.7	1.8	1.9	
I_{VDD33}	Power supply current	-	-	-	800	mA
I_{VDDIO}	I/O supply current	-	-	-	50	mA
V_{IH}	High-level input voltage	VDDIO=3.3V	VDDIO*0.625	-	VDDIO+0.3	V
		VDDIO=1.8V	VDDIO*0.65			
V_{IL}	Low-level input voltage	VDDIO=3.3V	-0.3	-	VDDIO*0.25	V
		VDDIO=1.8V			VDDIO*0.35	
V_{OH}	High-level output voltage	VDDIO=3.3V	VDDIO-0.4	-	VDDIO+0.3	V
		VDDIO=1.8V	VDDIO-0.2			
V_{OL}	Low-level output voltage	VDDIO=3.3V	-0.3	-	0.4	V
		VDDIO=1.8V			0.2	
R_{PU}	Internal pull-up resistor	VDDIO=3.3V	40	75	190	kΩ
		VDDIO=1.8V	10	50	100	
R_{PD}	Internal pull-down resistor	VDDIO=3.3V	40	75	190	kΩ
		VDDIO=1.8V	10	50	100	

10.3 Reference schematic

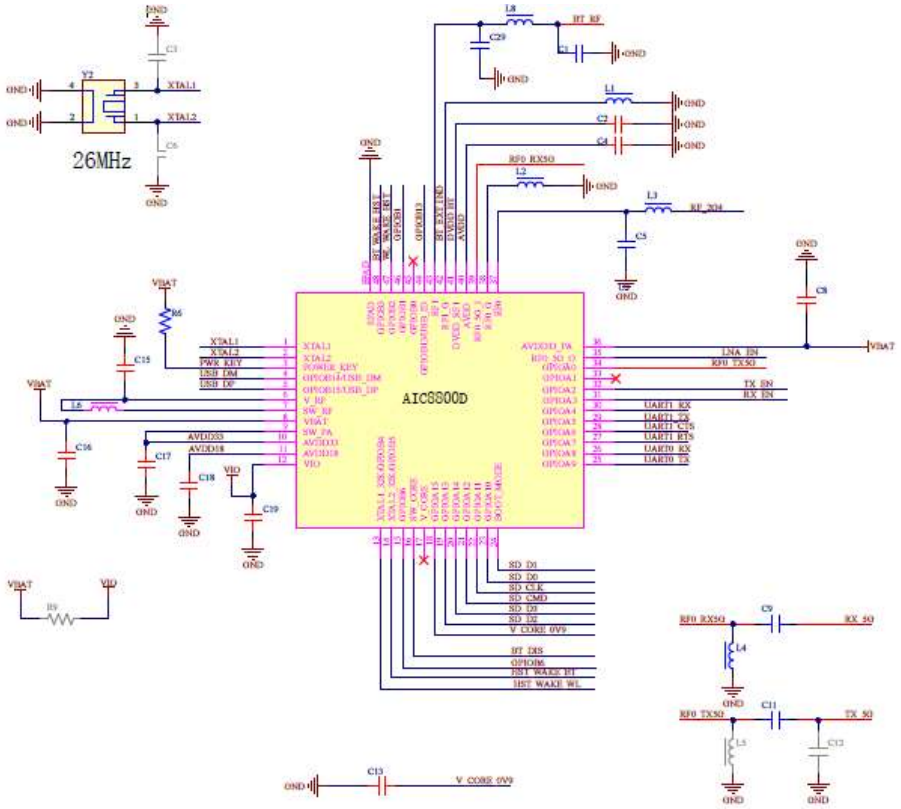

11. Mechanical,Environmental and Reliability Tests

Test Items		Test Conditions	Qty	Criteria Condition
11-1	**Drop test**	The packed samples within 100Kg can be tested Drop height: Face Side: 800/600/450mm Edge line: 600/450/350mm Drop time: 1 each Face and edge.	1xBox	After drop test, the outer box and inner box will not been broken by appearance visual inspection.
11-2	**Vibration test**	X-Y-Z direction, first Frequency changing from 10Hz to 30Hz to 10Hz,amplitude 0.75mm, 5 times vibrations, then frequency Changing from 30Hz to 55 Hz to 30 Hz, amplitude 0.15mm, 5 time vibration.	3	After test, the Appearance, Power EVM and Frequency error shall be satisfied with the specification.
11-3	**Impact test**	Impact acceleration: 50m/sec2; Impact duration: 16ms； Impact times: 1000.	3	After test, the Appearance, Power EVM and Frequency error shall be satisfied with the specification.
11-4	**Soldering ability test**	Soldering temperature: 235±5℃ Soldering duration: 2±0.5S	3	1. After soldering, the soldered area must be covered by a smooth bright solder layer, some deficiencies such as a small amount of the pinhole, not wetting are allowed, but the deficiencies can not be in the same place； 2. At least 90% of soldered area shall be covered continuously by the soldering material.
11-5	**Humidity test**	Leave samples in 40±3℃, 93% RH @ 96 hours	3	Leave samples in standard test condition for 2 hours then test, the Appearance, Power, EVM and Frequency error functional parameter shall be satisfied with the test specification.
11-6	**High temperature load life test**	Thermostat cabinet temperature: 55±5℃	60	After test, leave samples in standard condition for 1 hour and test, Power, EVM and Frequency error shall be satisfied with the test specification.

		Applied voltage: 110% rated voltage Working duration: 200 hour (Supply Voltage Cycle 23h power on, 1h power off)		
11-7	**High temperature load test**	Temperature: 55±5℃ Samples work for 16 hours	3	After test, the Appearance, Power, EVM and Frequency error shall be Satisfied with the test specification.
11-8	**Low temperature storage test**	Leave the samples in -25±3℃@24 hours	3	Leave samples in standard test condition for 2 hours then test, the Appearance, Power, EVM and Frequency error shall be satisfied with the test specification.
11-9	**Low temperature load test**	Leave samples in -15±3℃@ 2 hours, samples' function shall be normal, the let samples work for 1 hour	3	After test, leave the samples in standard condition and tested the Appearance, Power, EVM and Frequency error shall be satisfied with the test specification.
11-10	**Temperature circle test**	One cycle duration -10±3℃@3H 40±3℃ @3H Total cycle: 10x	3	After test, leave the samples in standard condition and tested Power EVM and Frequency error shall be qualified and all the characters shall be satisfied with the test specification.
11-11	**Continuous TP test**	Twice cycle duration -10±3℃@4H +60±3℃@4H, +25@2H@2H	3	During test, There will not been appeared signal disconnection or interruption between DUT and AP.
11-12	**ESD**	Discharge voltage: 1kV C: 150pF Discharge resistance：330Ω Positive10 times 1 time for each second	3	The products can recoverable smoothly after ESD test.

The requirement for KDB 996369 D03:

2.2 List of applicable FCC rules
FCC Part 15.247, FCC Part 15.407.

2.3 Summarize the specific operational use conditions.
EUT use FPC antenna and the antenna through the IPEX connector to connect the RF module.

2.4 Limited module procedures
The module is a single module, so this requirement is not applicable to the product.

2.5. Trace antenna designs
Antenna specification:

Characteristic	Specification	Unit
frequency range	2.4-2.5/5.15-5.85	GHz
input impedance	50	Ω

Antenna size:

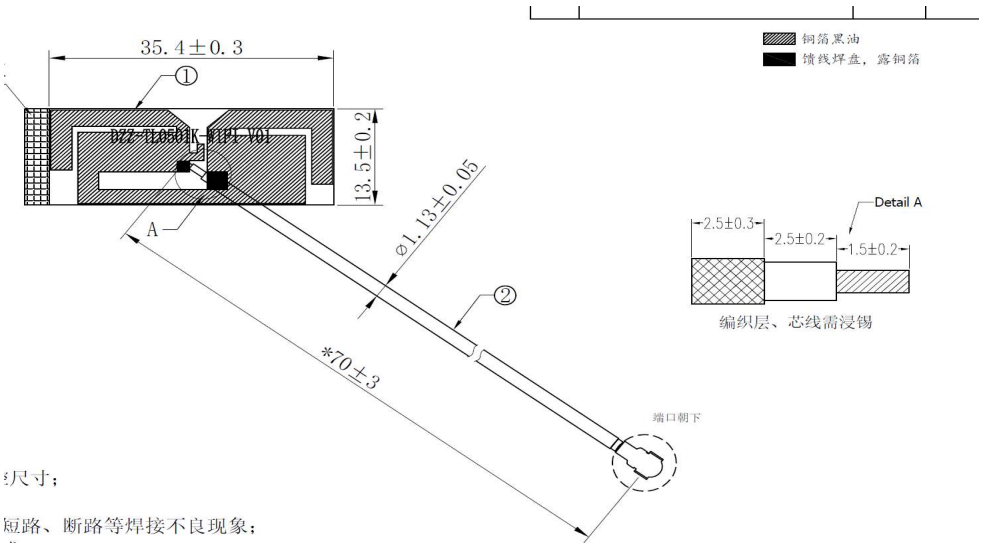

Antenna Gain:
2.4G:

Frequency ID	1	2	3	4	5	6	7	8	9	10	11
Frequency (MHz)	2400.0	2410.0	2420.0	2430.0	2440.0	2450.0	2460.0	2470.0	2480.0	2490.0	2500.0
Gain (dBi)	3.72	3.56	3.35	3.47	3.52	3.64	3.39	3.58	3.55	3.60	3.65
Efficiency (%)	63.31	62.37	61.00	62.51	61.18	60.23	62.81	64.03	61.35	61.21	60.27

5G:

Frequency ID	12	13	14	15	16	17	18	19	20	21	22	23	24	25	26
Frequency (MHz)	5150.0	5200.0	5250.0	5300.0	5350.0	5400.0	5450.0	5500.0	5550.0	5600.0	5650.0	5700.0	5750.0	5800.0	5850.0
Gain (dBi)	3.68	3.34	3.90	3.81	4.05	3.69	4.00	4.16	4.04	4.13	4.22	4.05	4.16	4.15	3.80
Efficiency (%)	62.64	63.77	61.13	63.43	65.11	62.09	65.43	64.29	65.76	66.10	67.97	65.92	65.70	63.59	64.79

The SKI.WB800DS2.1 module will be used on FOOD PRCESSED. The RF trace between antenna and the IC RF pin has to be in 50Ω impedance. The matching circuit has to be in place for better performance. The antenna on the module board is by PCB trace.

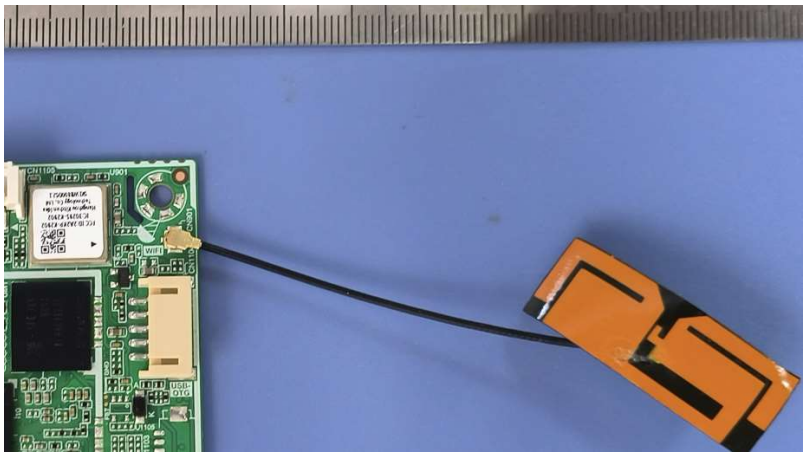

2.4G WIFI path:

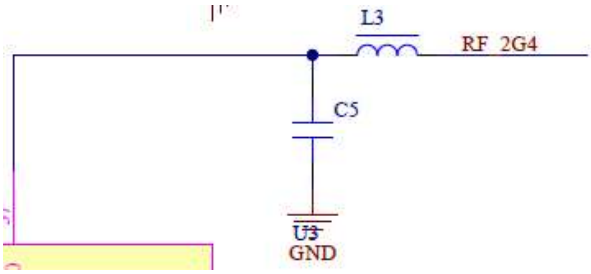

5G WIFI path:

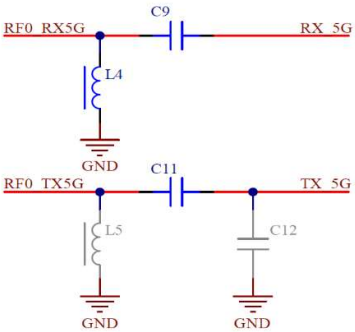

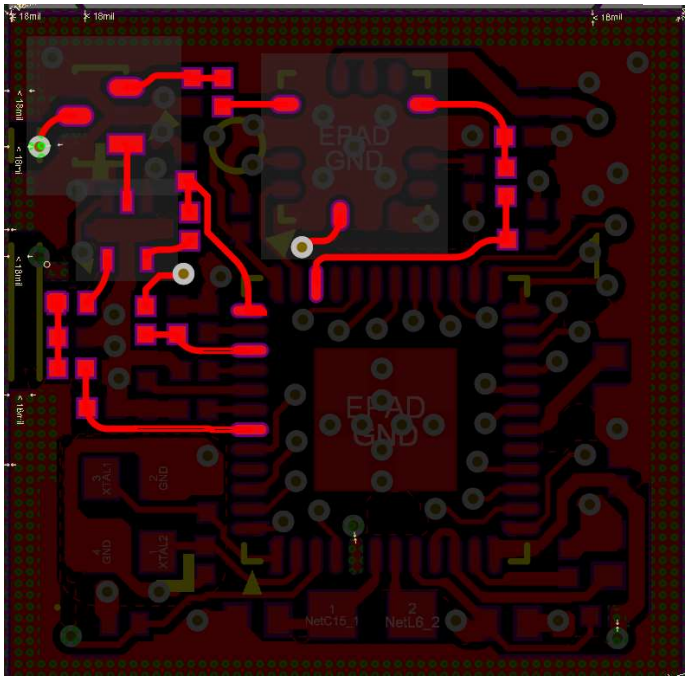

2.6 RF exposure considerations

The host device can be used only mobile device.
The separation distance of 20 cm or more should be maintained between the antenna of this device and persons during device operation.

2.7 Antennas

2.4G
PIFA antenna: 3.7 dBi max
5G
PIFA antenna: 4.2 dBi max.

2.8 Label and compliance information

If this certified module is installed inside the host device, then the outside of the host must be labeled with "Contains FCC ID: 2A2KP-K2902 and IC: 30295-K2902".

2.9 Information on test modes and additional testing requirements

The host manufacturer can use the software of Aic8800_porting_package_2023_0506_1655_3de974 to make the WIF transmit continuously.

2.10. Additional testing, Part 15 Subpart B disclaimer

The module only complies with the FCC Part 15.247 and 15.407. If the module is installed in the host device, the host manufacturer is responsible for the compliance to any other FCC rules that apply to the host not covered by the modular transmitter grant of certification. For example, if the host manufacturer markets their product as being Part 15 Subpart B compliant (when it also contains unintentional-radiator digital circuity), then the host manufacturer shall provide a notice stating that the final host product still requires Part 15 Subpart B compliance testing with the modular transmitter installed.