Hangzhou Kitchen Idea Technology Co., Ltd

Instruction Manual
- K3302 K3502

Important Safety Instruction

The following safety precautions should always be followed, to reduce the risk of electric shock, personal injury or fire. It is important to read all of these instructions carefully before using the product, and to save them for future reference or new users.

- Appliances can be used by persons with reduced physical, sensory or mental capabilities or lack of experience and knowledge if they have been given supervision or instruction concerning use of the appliance in a safe way and if they understand the hazards involved.
- This appliance shall not be used or played by children. Keep the appliance and its cord out of reach of children.
- Take care when handling the sharp cutting blades emptying the bowl and during cleaning.
- Switch off the appliance and disconnect from supply before changing accessories or approaching parts that move in use.
- Always disconnect the appliance from the supply if it is left unattended and before assembling, disassembling or cleaning.
- If the supply cord is damaged, it must be replaced by the manufacturer, its service agent or similarly qualified persons in order to avoid a hazard.
- Accessories, other than those supplied with the appliance, shall include instructions for their safe use.
- WARNING: Do not remove the lid while the machine is working.
- The appliance must not be immersed.
- This appliance is intended to be used in household and similar applications such as:
  - staff kitchen areas in shops, offices and other working environments;
  - farm houses;
  - by clients in hotels, motels and other residential type environments;
  - bed and breakfast type environments.
- Please put the unit on stable, flat table which will not become hot and ensure it is in safe distance from the edge to avoid falling down. When it is used to knead the dough or cut food, the unit may move because of vibration. So please do not use it without supervision of people so as to avoid the equipment falling down to the floor.
- Please pull out the plug when cleaning the appliance or put it away for a long time.
- Regularly check whether the main body, jar, steamer or other components are damaged or not. The damaged parts will decrease the safety of use. Once something wrong is found, please stop using and contact our after sales service center.
- If the appliance stops unexpectedly or appears to malfunction, switch off the power supply, unplug from the mains and stop using immediately. Seek professional advice to rectify the fault or make repairs.
- The measuring cup is the only part which can be used to cover the round hole in the jar lid. Please do not use cloth or similar things to cover the hole.
- Do not touch the edge of blades. Please be careful and hold the top part when you

assemble or remove the blade.

- Pay attention to the capacity mark on the blender jar.
- Open the lid until the food in the jar stops rotating.
- Pay attention to the high-temperature food when you open the jar lid. Please put the measuring cup at the hole of jar lid correctly when processing food.
- Do not touch the stainless steel jar when processing hot food of more than 60°C.The jar is engraved with the following logo

- Do not working exceed 2 minutes when at the highest speed levels 8,9,10, suggest to take break 1 minutes to continue cycle working.
- Please press the lid surround firmly to the jar edge then close the lid to make sure correct lid closed.
- Make sure that steamer and the jar are connected well when using steamer.
- Pay attention that vapor will outflow through the cover top or sides.
- In operation, do not touch any place of the steamer except its handles.
- Do not use the steamer without the steamer lid in place.
- When opening the steamer lid, be careful not to be scalded by vapor.
- When using steaming and boiling setting, pay attention that vapor will outflow through jar mouth when move the steamer.
- Keep on checking that the vent hole on the steamer lid is unblocked, or else the vapor may come out somewhere else.
- Please put the appliance and its hot after-use parts in the place which is out of the children's reach and warn the children that the unit will become hot and do not touch it.
- The leakage of food: Make sure that the blade sealing ring is placed well and the blade assembly is tightly fixed by the fixing bracket on the bottom. The failure of installation will cause the food leakage which will damage the appliance.
- Damage of poor ventilation: Ensure that the vents on the back of the main body are not blocked by any articles, or else the equipment will be damaged.
- It's normal that there will be some tiny motor smell in the first few times use.
- It's normal that there will stop and noise when changing the speed between level 5 and 6.
- Try to fill the container to scale; if the container fills up, boiling water may be spewed out
- Switch off the appliance and disconnect from supply before changing accessories or approaching parts that move in use
- Keep the connector dry, and avoid water spillage on the connector.
- Clean the stainless steel jug and other components by soft cloth.
- The jug may still hot after use because of the residual heat. Pay attention not to get burnt.
- Misuse may bring potential injury, please strictly follow the instruction manual.
- Please do not overload in jug when you use high speed working. Liquid please lower than 1L .

-

Hangzhou Kitchen Idea Technology Co., Ltd

Unique Identifier	
Product Description	Cooking food processor
Model Number	K3302、K3502
Trade Name	NA
FCC ID	2A2KP-K3111
IC	30295-K3111

FCC Compliance Statement

This device complies with part 15 of the FCC Rules. Operation is subject to the following two conditions: (1) This device may not cause harmful interference, and (2) this device must accept any interference received, including interference that may cause undesired operation.

Label (K3502 as sample**)**

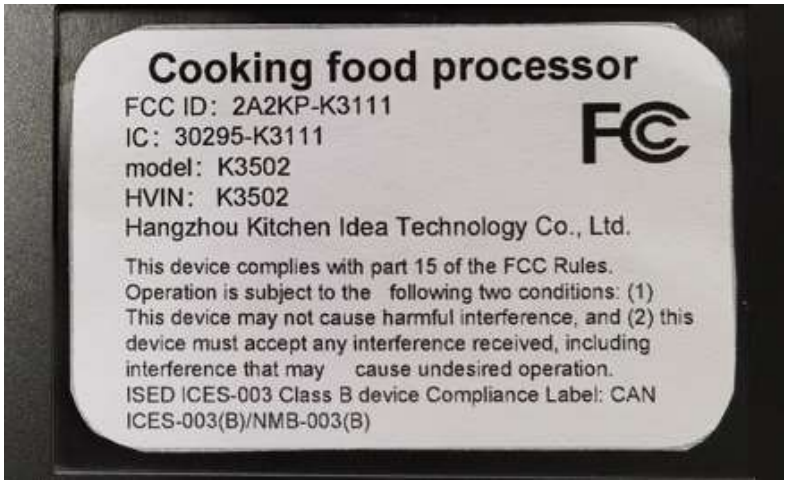

TECHNICAL DATA

Rating	120-127V~, 60Hz, 1600W
Motor	Power 700W;
Heater	Power 900W;

PACKAGE CHECKING

When opening the packing box, take out all the accessories and get to know them according to the components list. The spare parts are as follows:

1	Main body	7	Plastic lid
2	Blending jar	8	Filter basket
3	Jar lid	9	Butterfly
4	Measuring cup	10	Spatula
5	Big steamer	11	Kneading blade
6	Small steamer		

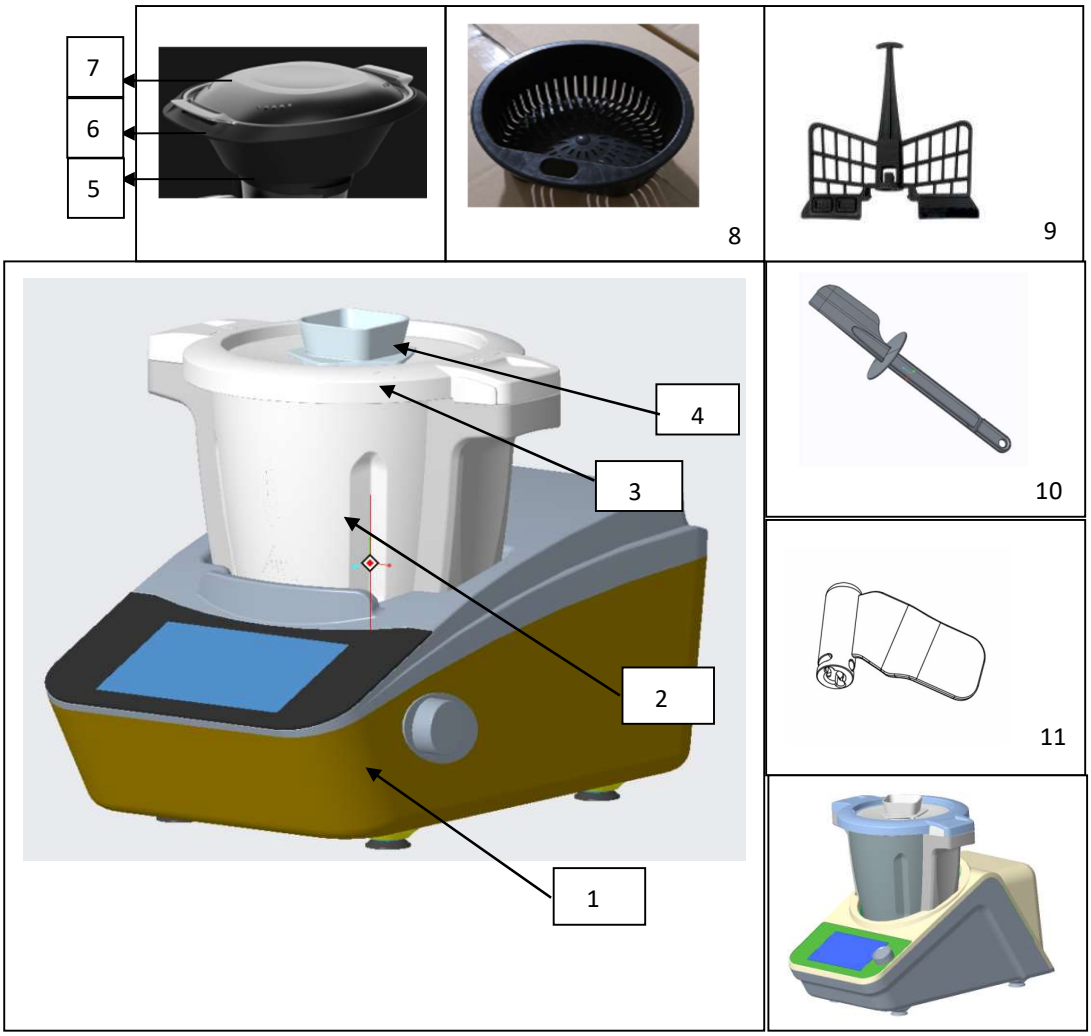

ACCESSORIES

Blending Jar assembly:

- There are jar capacity marks on one side of the jar. The maximum capacity of the jar is 3L.
- Put the lid on the jar, press the lid around firmly to the jar edge and turn the lid clockwise to fix the lid onto the jar, or else the motor cannot be started.
- Put the jar onto the main body at the correct direction and sit properly, or else the machine cannot be started

Blade base assembly:

- Fix the sealing ring on the Blade base assembly, put it into the through the hole of the jar bottom, hold the half top of the Blade base tightly and turn bottom upside, use the fixing bracket to fix the blade base by turning clockwise. Doing oppositely to remove it from the jar. Do not miss the blade base sealing ring between the blade and the jar bottom. Don't forget to remove the detachable blade before assembling or removing the blade base.

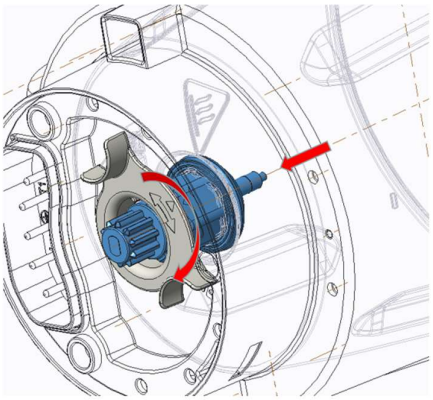

Blade assembly:

- Pinch the top of the blade assembly, press the blade down on the axis of the blade base assembly, then rotate the blade counterclockwise, the blender can be used to stir juice, etc

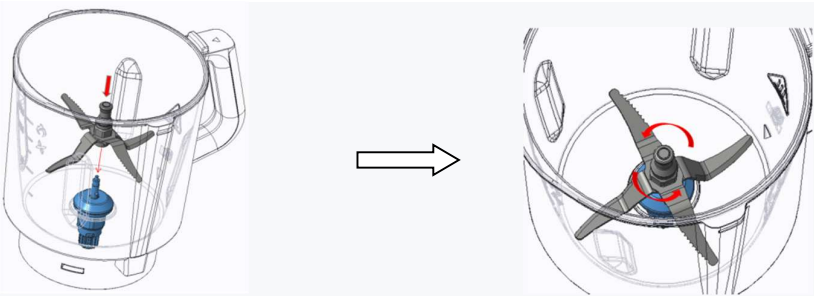

Kneading shaft assembly:

- Remove the blade, fix the kneading shaft the same way as fixing the blade. It can be used for kneading, or stirring and mixing without cutting the food. Do not use it for speed over 3, otherwise it will cause big vibration to the machine and cause risk.

Measuring cup:

- Put the measuring cup into the hole of the lid and press firmly.
- The measuring cup is the only part which can be used to cover the round hole of the lid
- Do not cover the hole by any other articles to avoid splash of the food to cause danger

Spatula:

- The spatula is the only component to be used to scrape the food in the jar. The other articles may cause damage to the non-stick coating inside of the jar.
- Do not use it to mix in the jar when the blade is working.

Filter basket:

- Sieve. Filter fruit and Vegetable juice. After grinding or making fruit sauce with the appliance, put the basket into the jar to help pour out the juice.
- Stew soft food such as pasta or noodles;
- Cook side dishes, such as rice and potatoes.

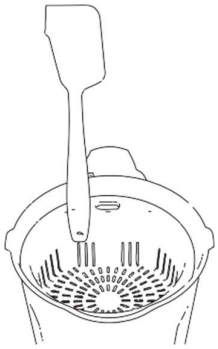

Butterfly:

- Installed on the blade, the butterfly can help to mix the food but preventing from cutting by blades, and prevent the food from being adhesive together and let the food keep on mixing.
- Fix the butterfly on the blade assembly by the hole, and press it with enough force for good connection, turn the butterfly bar counterclockwise to make it locked on the blade.
- Do not use above speed 4 when using butterfly.
- Do not add ingredients into the jar when the appliance is working with the butterfly, or else the butterfly may be damaged or blocked.

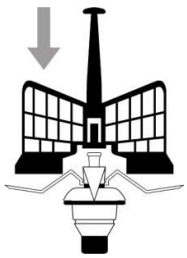

Steamer Assembly:

- Remove the jar lid, sit the steamer on the jar.
- Please make sure that the steamer lid is covered properly before heating and steaming.
- The steamer cannot be used in microwave oven or other electric appliances.
- Do not touch or get close to the holes of the steamer lid to avoid hurt by hot steam.
- Do not cover or block the holes of the steamer lid by any articles or else the steam may come out from the edge or other places and cause danger.

INSTRUCTION FOR USE

At the early stage of using this unit, there will be light smell from the motor which is normal phenomenon. After a period of time, this kind of smell will disappear.

- Please put the appliance on clean, stable and flat table. Do not put it too close to the edge, and keep it away from the built-in wardrobe or hanging bracket.
- It is better to put the appliance on some fixed place for your convenience.
- Please thoroughly clean the appliance before using.
- “Beep” sound shows the sensor button has brought into effect.
-

When the jar, lid are fixed properly, the appliance can start working

- When the jar, or lid is not fixed properly, heating can be started, but the motor cannot start working until locked.

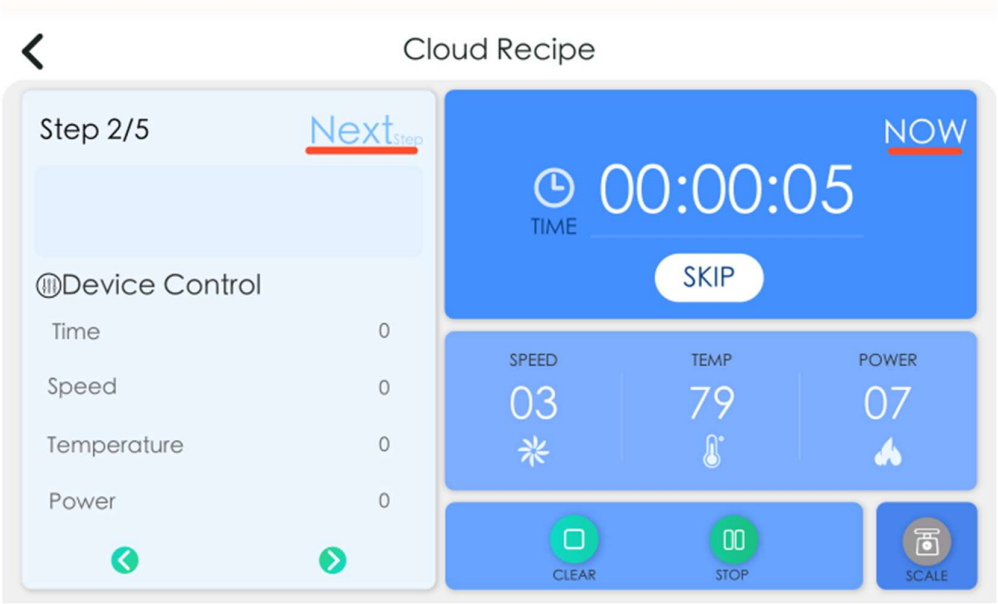
Cloud Recipe
Step 2/5
Next Step
NOW
00:00:05
TIME
SKIP
Device Control
Time 0
Speed 0
Temperature 0
Power 0
SPEED
03
TEMP
79
POWER
07
CLEAR
STOP
SCALE

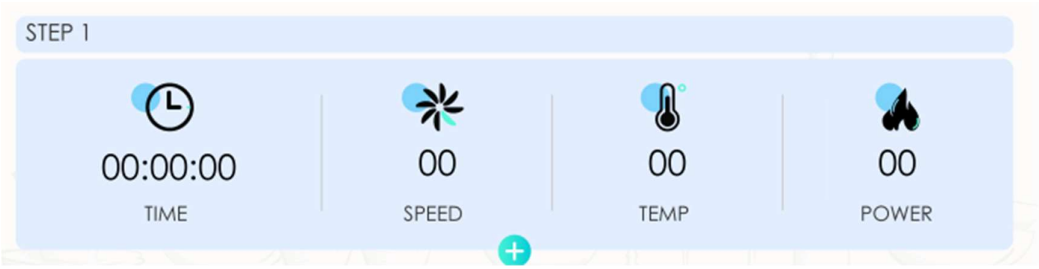
STEP 1
00:00:00
TIME
00
SPEED
00
TEMP
00
POWER

SUGGESTED SPEED AND CAPACITY FOR EACH ACCESSORY

Accessory	Image	Function	Speed	Capacity	Operation time
Multi function Stainless steel blades	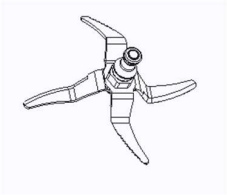	Chop (+)	5	2 L max, chop to be 1-2cm size before operation	1 min.
		Chop (++)	10	2 L max, chop to be 1-2cm size before operation	1 min.
Kneading Blade	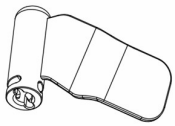	Knead dough for bread, pizza, etc.	2-3	800 g dough max	5-20 min
		Knead dough for noodles	3	600 g dough max	3 min
Butterfly		Stir	1-3	2 L max	30 min
		Whisk egg whites or cream	4	2 L max	10 min
Steamer		Steam vegetables	N/A	3.5 L max	15 min
		Steam meat	N/A	3.5 L max	20-30 min

Warning: Do not assemble or use the kneading blade and the basket at the same time.

Suggestion of practical cooking setting

Programs	Default setting	Setting	Tips
SMOOTHIE	*Speed: 10 *Temperature: 0 *Heat power: 10 *Timer: 30s	*All setting non-adjustable, run once more if not fine enough. *If left idle for 10 minutes after program completion, machine will turn off automatically	* Suggested chopped size of the ingredients with hard articles like carrot, meat is 1-2cm * Suggest not chop meat together with other ingredients. * Suggest to use 'Chop' program to chop meat.
QUICK SOUP	Step 1: *Speed: 10 *Temperature: 0 *Heat power: 0 *Timer: 30s Step 2: *Speed: 2 *Temperature: 100℃ *Heat power: 10 *Timer: 19.5min	*Suitable for vegetable soup, crush first and then cook and stir. Timer adjustable from 15-60m. *If left idle for 10 minutes after program completion, machine will automatically enter 'WARM' mode.	*Suggested chopped size of the ingredients with hard articles like carrot. *Suggest to pause and add butterfly after Step 1. * Suggest to remove the measuring cup and cover the basket after Step 1.
THICK SOUP	Step 1: *Speed: 10 *Temperature: 0 *Heat power: 0 *Timer: 30s Step 2: *Speed: 2 *Temperature: 100℃ *Heat power: 10 *Timer: 29.5min	*Suitable for meat soup, crush first and then cook and stir. Timer adjustable from 15-60m. *If left idle for 10 minutes after program completion, machine will automatically enter 'WARM' mode.	*Suggested chopped size of the ingredients with hard articles like carrot, meat is 1-2cm *Suggest to pause and add butterfly after Step 1.
CHOP	*Speed: 5 *Temperature: 0 *Heat power: 0 *Timer: 1min	*To crush but not to be smoothie. Time adjustable from 1s-5min for desired consistency. *If left idle for 10 minutes after program completion, machine will turn off automatically	*Suggested chopped size of the ingredients with hard articles like carrot, meat is 1-2cm. *If you need to crush the food to be the finest, please use SMOOTHIE
SAUTE	*Speed: 1 *Temperature: 120℃ *Heat power: 10 *Timer: 5min	*Saute and fry, time adjustable from 1-30m for desired consistency. *If left idle for 10 minutes after program completion, machine will automatically enter 'WARM' mode	*Use butterfly or kneading blade

STIR	*Speed: 2 *Temperature: 100℃ *Heat power: 10 *Timer: 30min	*Speed adjustable from level 0-3; *Temperature adjustable from 90-120℃. *Time adjustable from 5-60m *If left idle for 10 minutes after program completion, machine will automatically enter 'WARM' mode.	*Use butterfly or kneading blade
KNEAD	Step 1: *Speed: 3 *Temperature: 0 *Heat power: 0 *Timer: 3min Step 2: *Speed: 2 *Temperature: 0 *Heat power: 0 *Timer: 7min	*Speed adjustable from level 2-3; *Temperature adjustable at 0 or 37℃ for spreading. *Time adjustable from 3-20m *If left idle for 10 minutes after program completion, machine will turn off automatically	*Knead for bread: 330g water + 500g flour + other ingredients; knead 10min by default setting *Knead for noodle: 200g water + 400g flour; knead 3min by speed 2 *Set temperature 37℃ for spreading, and if it doesn't spread enough, choose 37℃ for 30min more without speed
STEAM	*Speed: 0 *Temperature: 120℃ *Heat power: 10 *Timer: 20min	*Time adjustable from 15-60m *If left idle for 10 minutes after program completion, machine will automatically enter 'WARM' mode.	*500g of water for every 20 minutes of steaming *Vegetable 20min; meat 30min
STEW	Step 1: *Speed: 0 *Temperature:100℃ *Heat power: 10 *Timer: no limit, until boil Step 2: *Speed: 0 *Temperature: 95℃ *Heat power:2, not certain, may adjust automatically according to the temperature and food volume *Timer: 3h	*Default timer 3h, adjustable from 1-12h *If left idle for 10 minutes after program completion, machine will automatically enter 'WARM' mode.	*Slow cook
WARM	*Speed: 0 *Temperature: 80℃ *Heat power: 2 *Timer: 1h	*Time adjustable from 1-12h *If left idle for 10 minutes after program completion, machine will turn off automatically	*It will turn to be 12h WARM automatically after the below auto programs finished: QUICK SOUP, THICK SOUP, SAUTE, STIR, STEAM, STEW, REHEAT, BOIL, RICE, PORRIDGE

REHEAT	*Speed: 0 *Temperature: 95℃ *Heat power: 5 *Timer: 30min	*Time adjustable from 1-60m *If left idle for 10 minutes after program completion, machine will automatically enter 'WARM' mode.	*Reheat the cold cooked food, liquid or solid. *If the food is not reheat well, extend the time
BOIL	*Speed: 0 *Temperature: 100℃ *Heat power: 10 *Timer: no limit, will auto stop after boiling	*All setting non-adjustable *If left idle for 10 minutes after program completion, machine will automatically enter 'WARM' mode.	*Heat up the liquid and stop after boiling.
YOGURT	*Speed: 1 at the first 30min, and then stop *Temperature: 37℃ *Heat power: 1 *Timer: 6h	*Time adjustable from 3-12h *If left idle for 10 minutes after program completion, machine will turn off automatically	*Suggested volume: 1 cup yogurt + 1L fresh milk + sugar, 6-12h according to desired consistency
RICE	*Speed: 0 *Temperature:105℃ *Heat power & Timer: not certain, may adjust automatically according to the temperature and volume	*All setting non-adjustable *If left idle for 10 minutes after program completion, machine will automatically enter 'WARM' mode.	*Suggested volume (max): 400g rice + 700g water, run RICE by default setting. Rice crust will form at the bottom. *Or steam rice by setting: 400g rice in the filter basket, 2L water, choose BOIL; then pour out some water with 1L left, choose STEAM for 20min
PORRIDGE	Step 1: *Speed: 1 *Temperature:90℃ *Heat power: 4 Step 2: *Speed: 1 *Temperature:95℃ *Heat power: 3 *Timer: 1h	*Timer adjustable from 30-120min according to desired consistency or food volume *If left idle for 10 minutes after program completion, machine will automatically enter 'WARM' mode.	*Suggested volume: 200g rice + 1.5L water + other ingredients like vegetable or shrimp, run PORRIDGE by default setting * Suggest remove measuring cup and upside down cover the basket to avoid overflow.
PULSE	*Speed: 10 *Temperature:0 *Heat power: 0 *Timer: no limit	*No time limit, press and hold the button, the motor runs; release the button it stops	For ice crushing: suggest to add the ice from the measuring cup hole during max speed running

Hangzhou Kitchen Idea Technology Co., Ltd

WARRANTY INFORMATION

EN

- To satisfy FCC / IC RF exposure requirements, a separation distance of 20 cm or more should be maintained between the antenna of this device and persons during device operation. To ensure compliance, operations at closer than this distance is not recommended.

- Any changes or modifications to this unit not expressly approved by the party responsible for compliance could void the user's authority to operate the equipment.

- This equipment has been tested and found to comply with the limits for a Class B digital device, pursuant to part 15 of the FCC Rules. These limits are designed to provide reasonable protection against harmful interference in a residential installation. This equipment generates, uses and can radiate radio frequency energy and, if not installed and used in accordance with the instructions, may cause harmful interference to radio communications. However, there is no guarantee that interference will not occur in a particular installation. If this equipment does cause harmful interference to radio or television reception, which can be determined by turning the equipment off and on, the user is encouraged to try to correct the interference by one or more of the following measures:

  — Reorient or relocate the receiving antenna.

  — Increase the separation between the equipment and receiver.

  —Connect the equipment into an outlet on a circuit different from that to which the receiver is connected.

  —Consult the dealer or an experienced radio/TV technician for help.

Industry Canada: ICES-003/NMB-003

This device complies with Industry Canada license - exempt RSS standard(s).

Operation is subject to the following two conditions:

1. This device may not cause interference, and
2. This device must accept any interference, including interference that may cause undesired operation of the device.

French

• pour satisfaire aux exigences d'exposition FCC/IC RF, une distance de séparation de 20 cm ou plus doit être maintenue entre l'antenne de cet appareil et les personnes pendant le fonctionnement de l'appareil. Pour assurer la conformité, il n'est pas recommandé d'effectuer des opérations à une distance supérieure à cette distance.
• tout changement ou modification de cette unité non expressément approuvé par la partie responsable de la conformité pourrait annuler l'autorité de l'utilisateur de faire fonctionner l'équipement.
• cet équipement a été testé et jugé conforme aux limites pour un appareil numérique de classe B, conformément à la partie 15 des règles de la FCC. Ces limites sont conçues pour fournir une protection raisonnable contre les interférences nuisibles dans une installation résidentielle. Cet équipement génère, utilise et peut émettre de l'énergie radiofréquence et, s'il n'est pas installé et utilisé conformément aux instructions, il peut causer des interférences nuisibles aux communications radio. Cependant, rien ne garantit que des interférences ne se produiront pas dans une installation particulière. Si cet équipement provoque des interférences nuisibles à la réception de la radio ou de la télévision, qui peuvent être déterminées en éteignant et en allumant l'équipement, l'utilisateur est encouragé à essayer de corriger l'interférence par une ou plusieurs des mesures suivantes:
- réorienter ou déplacer l'antenne de réception.
- augmenter la séparation entre l'équipement et le récepteur.
-brancher l'équipement sur une prise sur un circuit différent de celui auquel le récepteur est connecté.
-consultez le revendeur ou un technicien radio/TV expérimenté pour obtenir de l'aide.
Industrie Canada: ICES-003/NMB-003
Cet appareil est conforme aux normes RSS exemptées d'industrie Canada.
Le fonctionnement est soumis aux deux conditions suivantes:
1. Ce dispositif ne peut pas causer d'interférence, et
2. Cet appareil doit accepter toute interférence, y compris les interférences qui peuvent causer un fonctionnement indésirable de l'appareil.

CLEANING AND MAINTENANCE

- The stainless-steel jar is dishwasher safe. To wash it in the dishwasher, remove the blades, as they are not dishwasher safe.
- The ceramic jar is not dishwasher safe. To wash it, remove the KitchenideaMix spoon and use warm water and soap. Then rinse and dry it thoroughly.
- To wash the ceramic jar, you must be careful not to wet the lower part of the jar, where connections are placed. If connections become wet, the jar will not work correctly.

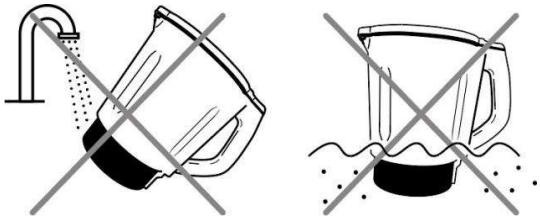

-Turn off and unplug the appliance from the power supply and allow it to cool down before cleaning Clean the food processor after each use.

- Wash the butterfly whisk and the rest of the accessories with warm soapy water. Rinse again and dry well.
- Wipe the main body with a clean damp cloth. If food residue remains, dampen the cloth in warm soapy water before wiping it. Never immerse the main body in water or other liquid.
- In order to maintain the good performance of your appliance, check and clean the removable bottom part of the jar after each use. Wipe it with a soft damp cloth and dry it thoroughly before using it again.
- If the appliance is not going to be used for a long time, unplug it from the power supply and store it in a cool and safe place.

Jar pre-washing advice

For better results,you can do a previous rinse in the jars with the food processor. Both the ceramic jar and stainless-steel jar can carry out this process. To do so, follow these steps:

- Place the batterfly on the blades to rinse the stainless-steel jar and the KitchenideaMix spoon to rinse the ceramic jar.
- Introduce 500 ml of water and 10ml of soap.
- Close the cover and set speed 3, temperature 50 and a maximum time of 3 minutes.
- Empty the jar, there may be some food leftovers, so finish washing the jar by hand (both the ceramic and stainless-steel har) or introduce the stainless-steel jar in the dishwasher.

Warning

- Do not immerse or expose to water the connectors located on the bottom part of the ceramic jar.

The blades and the KitchenideaMix spoon are dishwasher safe.

TROUBLE-SHOOTING

- The below error information appeared on the screen is normal. If it still appears the problem after you acted according to the solution below, please contact our customer service center.

Error code	Description	Possible reasons	Solution
E1	Safety switch not fixed	Jar or jar lid is not fixed properly.	Re-assemble the jar and jar lid, make sure all the parts are assembled properly and tightly
E2	Temperature sensor missing	The jar is not in place, or connection of the temperature sensor at the jar base is damaged	Re-assemble the jar and make sure it is fixed properly and tightly
E3	Motor blocked	Too big loading in the jar	Decrease the volume of the food in the jar, or cut the food to smaller pieces and re-start the machine.
E4	Too high temperature	No food in the jar, or very little food with high temperature setting for too long time.	Add food in the jar
E5	Motor temperature too high	The machine works at high loading for too long time Motor NTC temperature≥90℃	Stop and let the machine to cool before re-started
E7	Speed transfer failure	Speed changing between low level (1-5) and high level (6-10) blocked Speed transfer failure	Stop machine, re-started
E08	Motor NTC failure	When starting speed program , the motor NTC is not detected .	Stop machine and re-started
E11	Cannot use Pulse or speed over level 4 use high speed and high temperature at the same time.	The temperature in the jar is over 90℃,use level 4 at the same time.	Cool down the food lower 90℃ and Pulse again, or use lower speed 4
E12	Weight overload	Weight heavy than 5kg	1. Reduce weight to less than 5kg 2. Press any other setting button or press knob to back to normal setting mode

WARRANTY INFORMATION

The manufacturer provides warranty in accordance with the legislation of the customer's own country of residence, with a minimum of 1 year, starting from the date on which the appliance is sold to the end user. The warranty only covers defects in material or workmanship.
The repairs under warranty may only be carried out by an authorized service centre. When making a claim under the warranty, the original bill of purchase (with purchase date) must be submitted.
The warranty will not apply in cases of:

- Normal wear and tear
- Incorrect use, e.g. overloading of the appliance, use of non-approved accessories
- Use of force, damage caused by external influences
- Damage caused by non-observance of the user manual, e.g. connection to an unsuitable mains supply or non-compliance with the installation instructions
- Partially or completely dismantled appliances

DISPOSAL AND ENVIRONMENT

If your electrical appliance requires replacement or is of no further use, please think of protecting the environment. Contact your local authority for advice as many have facilities for environmentally safe disposal

Correct Disposal of this product

This marking indicates that this product should not be disposed with other household wastes throughout the EU. To prevent possible harm to the environment or human health from uncontrolled waste disposal, recycle it responsibly to promote the sustainable reuse of material resources. To return your used device, please use the return and collection systems or contact the retailer where the product was purchased. They can take this product for environmental safe recycling.

COPYRIGHT

Our company will keep the right of the documentation,designand picture description. Without the approval of the copyright owner, thepublication should not be allowed to be reprinted orcommunicated in the form of electronic information(photograph or video).

The copy of the instruction manual is available to download on website:
www.kitchenidea.com.cn