FJ DYNAMICS Disinfection Robot

Product Manual

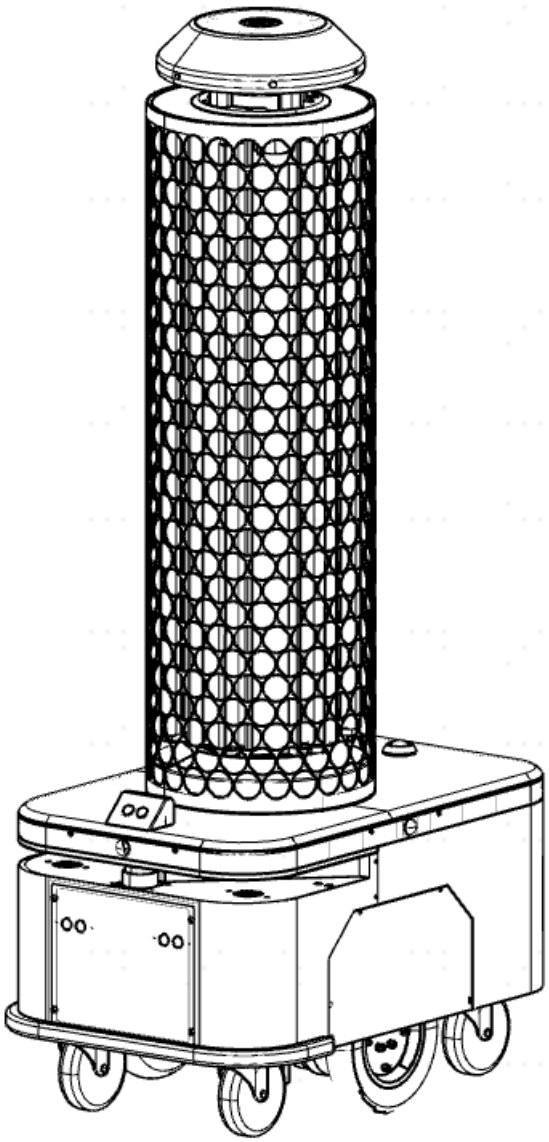

I. Declaration

Copyright©2020 FJ Dynamics Technology Co., Ltd.

All rights reserved.

Without an express written approval of FJ Dynamics Technology Co., Ltd., no unit or individual shall counterfeit, copy, transcribe or translate all or part of this manual, or disseminate it in any manner (electronic, photocopied, recorded, etc.) for profit.

This manual is for guidance only. The statement made herein shall not constitute any form of warranty.

II. Foreword

Dear users, thank you for choosing FJ DYNAMICS Disinfection Robot. Please read this manual carefully before use, and follow the instructions to know and use your disinfection robot.

III. Introduction

This manual mainly introduces the functional characteristics, installation and usage of FJ DYNAMICS Disinfection Robot and matters of attention during use.

This manual includes the following content:

1. Safety precautions

   Robot operation specification and precautions for use.

2. Usage scenarios

   Detailed requirements for robot application scenarios and precautions.

3. Robot introduction

   Brief introduction to the basic functions and detailed description of the structure of the robot.

4. Operation steps

   Robot installation and application methods.

5. Annexes

   Introduction to important functions including charging, voice broadcast and emergency handling, recommended disinfectant types, hazardous substances in product, product list, product maintenance, common faults and solutions, detailed technical specifications, etc.

6. After-sales service

7. Warranty period of main components

Contents

I. Declaration.....2
II. Foreword.....3
III. Introduction.....4
IV. Safety precautions.....6
V. Usage scenarios.....8
VI. Robot introduction (know your robot).....10
VII. Main structure of the robot.....10
VIII. Operation steps (use your robot).....13
IX. Charging.....36
X. Robot status indicator light.....37
XI. Voice broadcasting scenarios.....39
XII. Emergency handling.....41
XIII. Recommended disinfectant types.....41
XIV. Hazardous substances.....43
XV. Product list.....44
XVI. Product maintenance.....45
XVII. Common faults and solutions.....46
XVIII. Major hardware specifications.....47
XIX. After-sales service.....48
XX. Warranty period of main components.....54

IV. Safety precautions

Requirements for operators:

1. Operators must receive relevant operation trainings and wear professional garments for disinfection.

Operating environment:

1. Please keep away from crowds, animals and plants, to prevent damage to human body, animals and plants by disinfectant spray and UV light.
2. This wheeled robot is for indoor use on level ground only (smooth ground, gradient<5°, projection no higher than 1cm). Do not use this robot in outdoor environment (e.g., open balcony) or rough terrain (e.g., stairs).
3. Do not use this robot when the temperature is above 50℃ or below 0℃ or on ground covered with fluid or sticky substance.
4. Please clear away wires from the ground before operation to avoid interference with the host and sharp objects (decoration waste, glass, iron nails, etc.) to avoid damage to the chassis.

Operation specification:

1. No one shall be allowed into the working area when this product is working.
2. The entire disinfection process of the robot shall be monitored by the operator in real time to ensure timely manual intervention.
3. When driven in public places in non-work mode, the robot must be operated manually with UV and spray disinfection functions turned off.

Examination before use:

1. Ensure that the robot is fully charged with sufficient disinfectant.
2. Ensure that relevant parameters in the tablet device are calibrated before automatic operation.

3. Ensure normal Wi-Fi and network communication, and complete troubleshooting before use in case of abnormality.

Battery and charging:

1. Do not use batteries, battery adapters or charging piles supplied by any third party.
2. Do not disassemble, repair or modify batteries and charging piles without permission
3. Do not wipe or clean the contact pieces of charging piles with damp cloth or wet hand.
4. Disused batteries should be disposed of properly. It is recommended to hand over to professional organizations.
5. Keep charging piles away from heart sources (such as radiators).
6. When this product is not used for a long time, please store it in a cool and dry place after charging it fully and turning off the host, and charge it at least once per month to avoid battery damage.
7. Please check the power supply requirements before charging. Charging piles require an input voltage of 100-240 V AC and an output voltage/current of 54.6 V/5 A DC.

UV disinfection lamp:

1. To prevent damage, the UV disinfection lamp must not be assembled and disassembled except for by trained professionals.
2. Please keep a distance of at least 10m or more from human and animals when the robot is working, to avoid burns from UV radiation.
3. Do not look straight at the UV disinfection lamp to avoid burning eyes.
4. If the robot cannot be shut down remotely, please wear protective clothing and sunscreen before manual operation, to avoid burns from UV radiation.
5. High humidity (60%-70%) will reduce the disinfection performance of the UV

lamp, and the radiation time should be prolonged by 30 min. When humidity exceeds 80%, UV light has stimulation effect (opposite effect) on microorganisms, and the UV lamp should not be used.

6. The ideal temperature for UV disinfection is a room temperature of 20-40℃, otherwise the disinfecting effect of the UV lamp will be directly affected. At -4℃, its disinfecting effect will be reduced by 60%-80%, and the radiation time should be prolonged by 30 min.

Others:

1. To receive warranty service, the shell of this product must remain intact.
2. The scope of free repair service does not include damage to the device by force majeure (lightening stroke, high voltage, collision, etc.).
3. Please connect the device in strict accordance with the requirements in the manual. Cables including the USB cable should be plugged and unplugged gently by holding the bottom of the plug. Do not pull cables with force to prevent needle breakage.

V. Usage scenarios

	No.	Requirements	Precautions
Disinfection Robot	1	No stairs in the moving path of the robot.	Designed for operation on level ground with the maximum gradient 5° and the maximum height of surmountable obstacle 20mm, the robot cannot pass through stairs. Please make sure the robot is used on level ground.
	2	The width of the moving path for disinfection must be ⩾1 m.	The robot is 0.48m wide, and the left-right distance for ultrasonic and LiDAR detection is 1m. A path less than 1m in width will be misjudged as an obstacle.

	3	No presence of human or animals at the work place of the disinfection robot.	1. The effective disinfection radius of the UV lamp is 2m. 2. Do not look straight at the UV disinfection lamp, as UV light will cause damage to the eyes of human and animals.
	4	Total coverage of each disinfection: radius ≤ 50 m; total area≤10000 ㎡ (L 100m, W 100m).	1. The robot creates a disinfection map with the starting point as the center by moving 50m in a straight line towards the front, back, left and right, covering 1000 ㎡ in area. 2. The disinfection map must be created from the central point, as the maximum moving distance covered by LiDAR is 50m. If the map is created from the edge, the maximum area of disinfection will be reduced to 2500m^2.

VI. Robot introduction (know your robot)

- Designed for indoor operation, FJ DYNAMICS disinfection robot applies to indoor public places such as hospital, hotel, office, supermarket, restaurant, Internet café and KTV.

- FJ DYNAMICS disinfection robot utilizes machine vision and LiDAR to realize core functions including autonomous positioning and navigation and intelligent obstacle avoidance. In the indoor environment, it supports both autonomous operation and manual control with a remote control tablet installed with the robot control software developed by FJ DYNAMICS independently.

- The disinfection system of FJ DYNAMICS disinfection robot includes liquid atomization and UV lamp disinfection functions.

VII. Main structure of the robot

Figure 1 shows the host structure of FJ DYNAMICS disinfection robot. Its chassis includes two driving wheels and four driven wheels. Machine vision and LiDAR are adopted to achieve autonomous positioning, with multiple sensors including infrared, ultrasonic and touch switch integrated to realize intelligent obstacle avoidance.

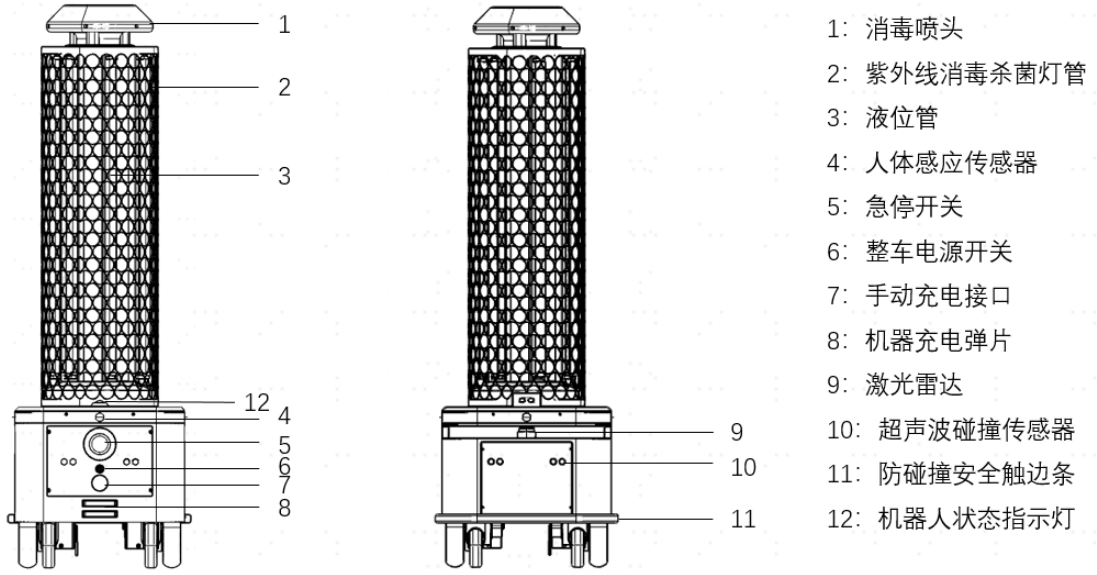

Figure 1. Host structure

1. Disinfectant sprayer

2. UV tube

3. Dip tube

4. Human body detection sensor

5. Emergency stop

6. Power switch

7. Manual charging port

8. Charging connector

9. LiDAR

10. Ultrasonic collision sensor

11. Bumper

12. Status indicator light

Figure 2 demonstrates the charging pile structure. The robot is capable of autonomous recharge, which includes autonomous charging pile searching, matching and contacting.

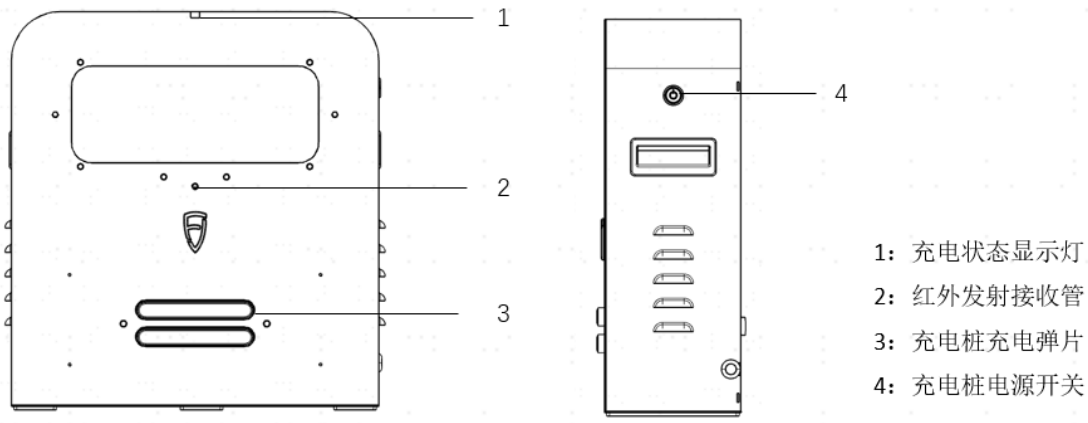

Figure 2. Charging pile structure

1. Charging state indicator light

2. Infrared LED

3. Charging connector

4. Power switch

Figure 3 illustrates the operation of remote control tablet. The robot can be operated through the buttons or the software installed on the remote control tablet.

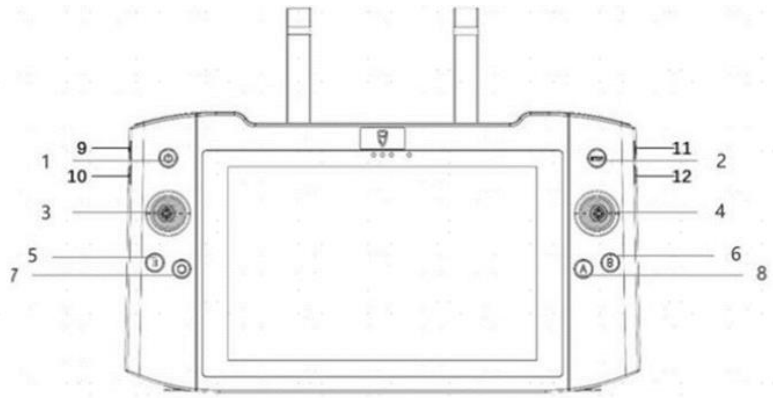

1、开关键：点击点亮、熄灭屏幕；长按开机、关机；
2、紧急制动键：点击停止机器人行进，关闭消毒开关；
3、方向键：控制机器人前、后、左、右行进，仅手动模式和构建地图时生效；
4、方向键：控制机器人前、后、左、右行进，仅手动模式和构建地图时生效；
5、关闭紫外线灯：关闭紫外线灯，仅手动模式下生效；
6、关闭喷雾：关闭喷雾，仅手动模式下生效；
7、暂无定义；
8、打开喷雾：打开喷雾，仅手动模式下生效；
9、增大机器人音量；
10、减小机器人音量；
11、减小平板音量；
12、增大平板音量；

Figure 3. Operation of remote control tablet

1. On/off switch: click to turn on or off the screen; long press to turn on or off the machine.

2. Emergency stop: click to stop the robot and turn off the disinfection switch
3. Direction button: control the robot to move towards the front, back, left or right, only effective when creating a map under the manual mode
4. Direction button: control the robot to move towards the front, back, left or right, effective when creating a map under the manual mode
5. UV light off: turn off the UV light, effective under the manual mode
6. Atomization off: turn off atomization, effective under the manual mode
7. Undefined
8. Atomization on: turn on atomization, effective under the manual mode
9. Robot volume up
10. Robot volume down
11. Tablet volume up
12. Tablet volume down

VIII. Operation steps (use your robot)

Please use your robot following the operation steps below:

Use the charging pile

1. The charging pile should be placed in an open space against a wall, without any obstacles in an area of 2 ㎡.
2. Use 100-240 V AC power.
3. Press the power switch to turn on the charging pile.
4. Push the robot to the charging pile, for the charging connectors of the robot and the charging pile to contact.
5. Match the remote control to the robot, and click “Return” on the App to start charging.
6. Status indicator light of the charging pile:

- Red light is on when not charging.
- When charging begins, red and green light flash alternatively to indicate charging status.
- When charging is completed, green light is on before the robot is detached from the charging pile.
- The indicator light turns from green to red after the robot is detached from the charging pile.

- Flashing red light indicates a fault during charging.

Add disinfectant

1. Wear protective gloves and goggles to prevent damage to the human body by disinfectant.

2. Turn off the machine.

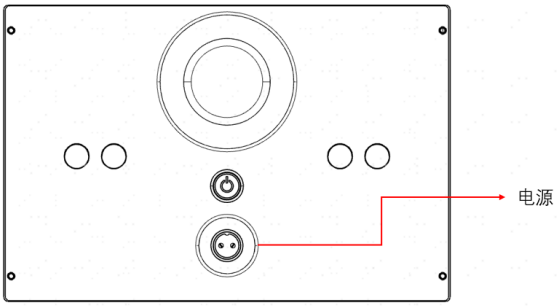

Power

3. Prepare disinfectant in a container.

4. Disassemble the disinfectant sprayer: rotate the sprayer clockwise and lift it up, pull down the USB cable to remove the cork from the trunking, unplug the USB, and the disinfectant sprayer is disassembled successfully.

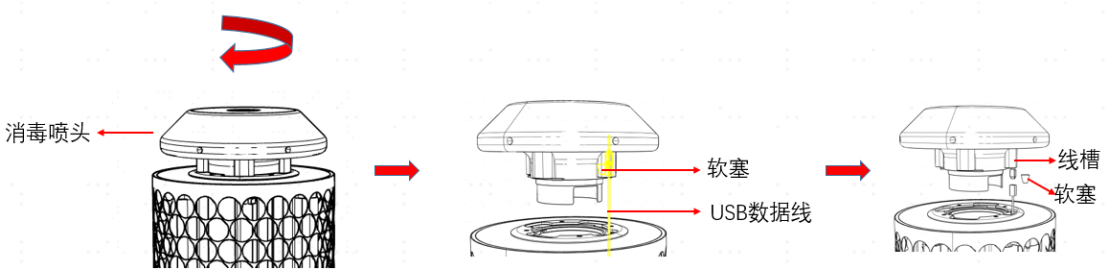

消毒喷头 Disinfectant sprayer

软塞 Cork

USB 数据线 USB cable

线槽 Trunking

5. Plug the air outlet with the stopper, to prevent machine damage caused by disinfectant seeping into the robot.

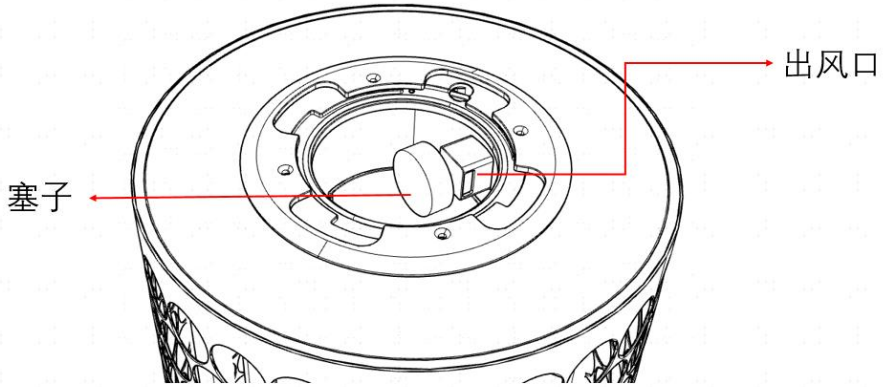

塞子 Stopper

出风口 Air outlet

6. Put in the funnel.

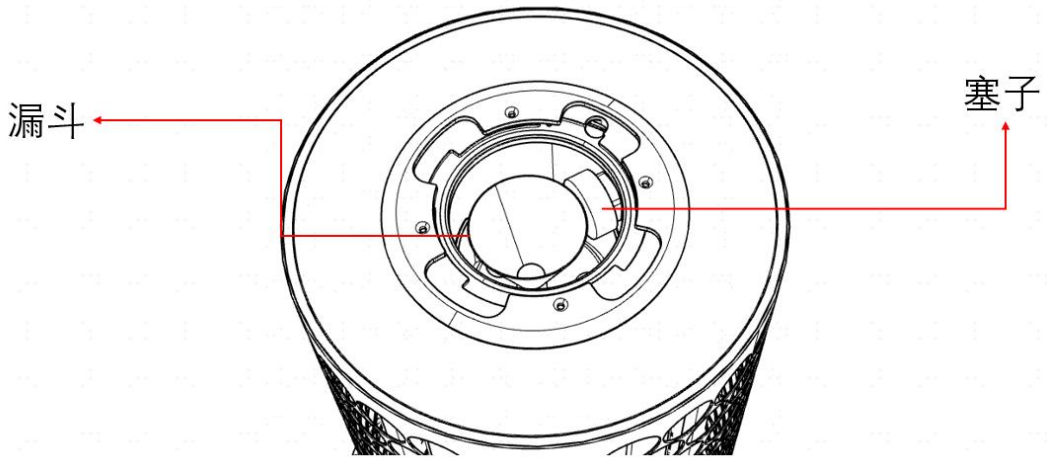

漏斗 Funnel

塞子 Stopper

7. Use a measuring cup to slowly inject disinfectant into the disinfectant barrel through the funnel. The maximum capacity of the barrel is 10L. Observe the liquid level throughout the process, and make sure that the disinfectant injected is between the minimum and the maximum scale marks, to prevent short circuit of other devices caused by overflowing disinfectant.

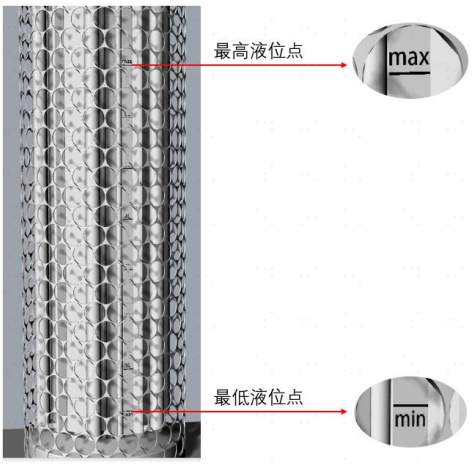

最高液位点 Maximum liquid level

最低液位点 Minimum liquid level

8. Take off the funnel, and remove the stopper from the air outlet.

9. Install the disinfectant sprayer: connect the USB cable and place it in the trunking, put in the cork to prevent the USB plug from slipping off, insert the disinfectant sprayer and rotate anticlockwise, and the disinfectant sprayer is installed successfully.

10. Disinfectant atomizers may produce high temperature during normal use. Please do not touch with hands to prevent burning.

Discharge disinfectant

1. Pull out safety shield from above.

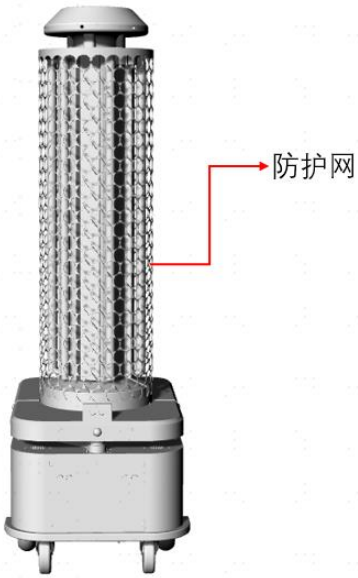

Safety shield

2. Unscrew and take off the base.

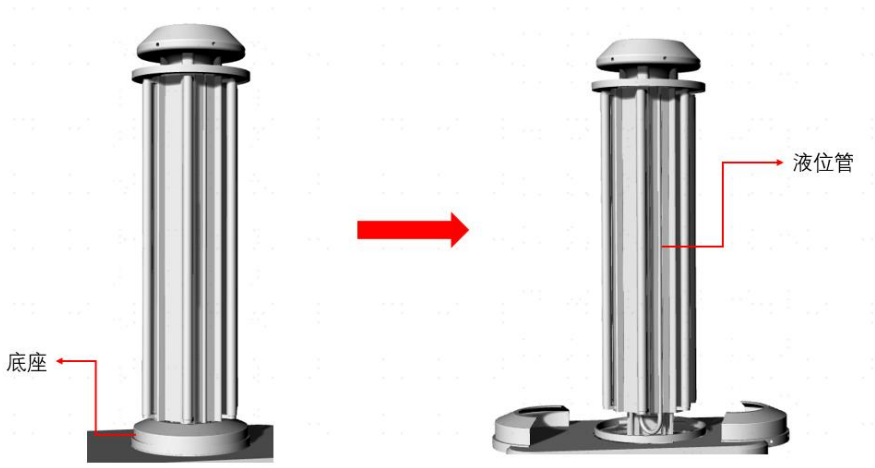

底座 Base

液位管 Dip tube

3. Lay flat the dip tube to drain disinfectant out.

App guide

Please check the following before operation begins:

- The robot should start operation from the charging pile.
- Its battery level should be maintained above 50%.
- Ensure sufficient disinfectant.
- Ensure no obstacles around the robot.

1. Matching and networking

Match the remote control to the robot:

(1) Click “Connect robot” in the middle of the main interface to access connection settings.

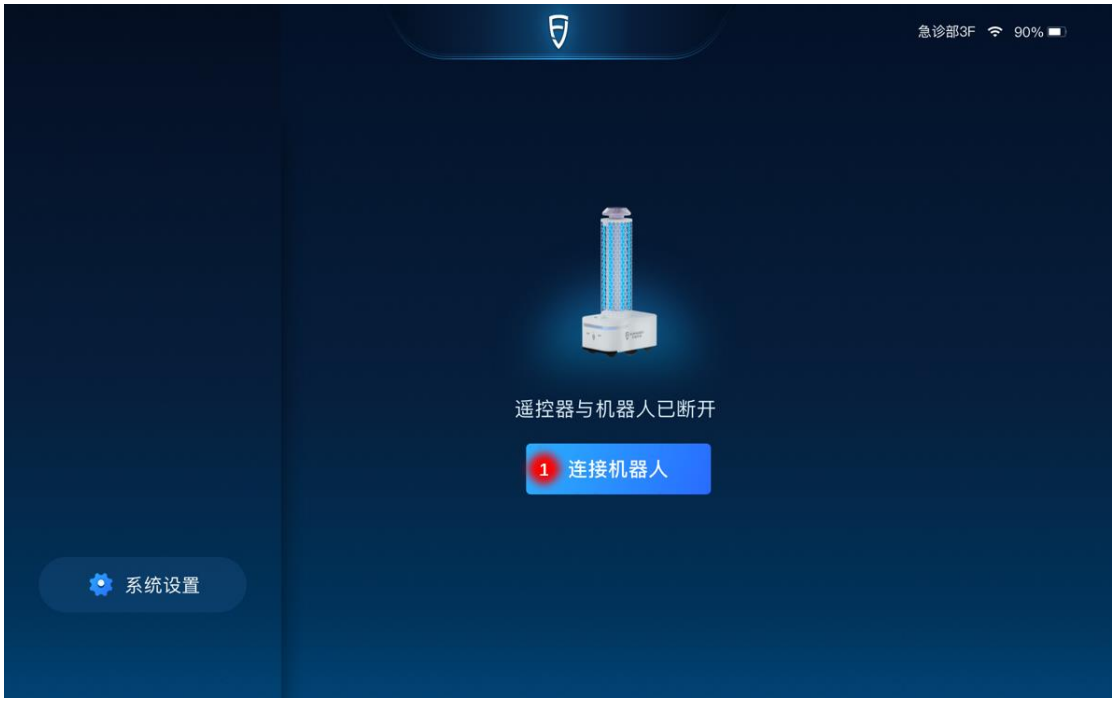

(2) Click “Direct connection” to access the robot list.

(3) Select the robot to be matched, and a password entry window pops up.

(4) Enter the password and click “Confirm”.

Connect the robot to local Wi-Fi:

(1) Click the robot information box in the top left corner of the main interface, and the robot information box pops up.

(2) Click “Network settings” to access the matching and networking interface.

(3) Select the local Wi-Fi.

(4) Enter the network password, and click “Connect to network”.

Connect the remote control to local Wi-Fi:

(1) Click “System settings” in the bottom left corner of the interface to access system settings.

(2) Click “network settings” to access the Wi-Fi list.

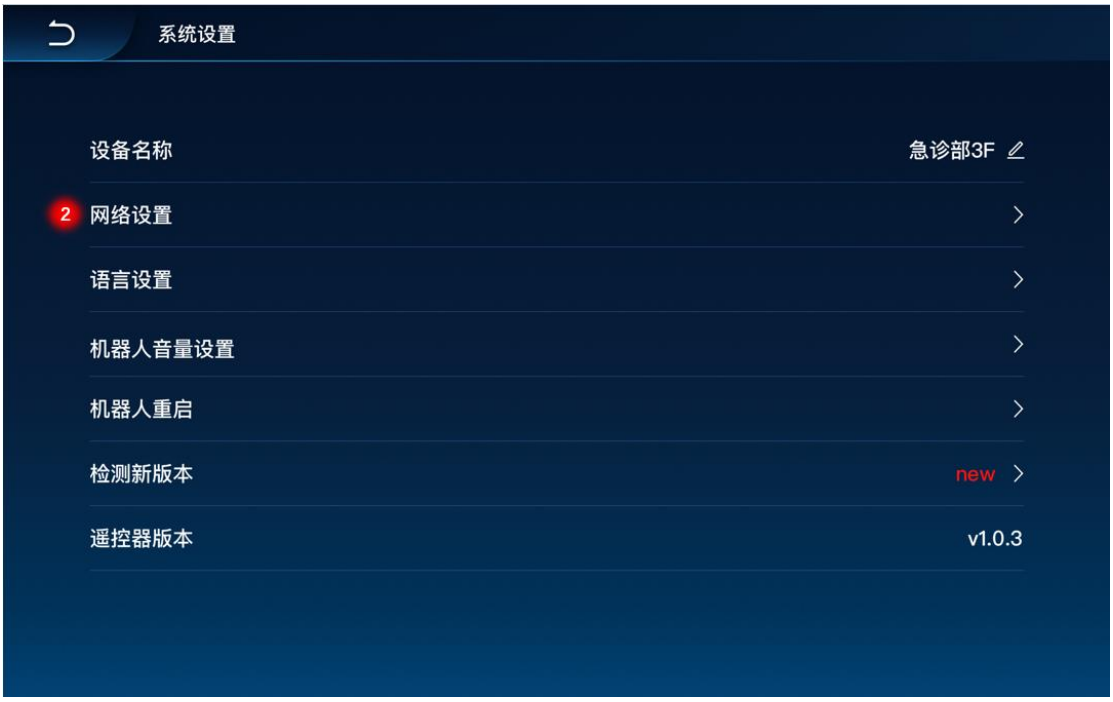

(3) Select the local Wi-Fi.

(4) Enter the network password, and click “Connect to network”.

2. Mode instructions

After successful matching and networking, the robot is in auto mode by default. Click “Manual control” in the bottom right corner of the interface, it will switch to manual mode; click “⮌” in the top left corner, it will switch back to auto mode.

2.1 Manual mode

Under the manual mode, robot movement can be controlled with the levers on the left and right of the remote control, which can set the moving mode of the robot, control the spray and UV functions, adjust the moving speed of the robot, pause the robot, or demand the robot to return immediately.

2.2 Auto mode

2.2.1 Create a map

Step 1: make sure the robot starts from the charging pile with above 50% of battery level and no obstacles in the front.

Step 2:

1. Create an environmental map

(1) Click “Create map” in the middle of the interface to start creating a map.

(2) Control the robot with remote-control levers to circle the area awaiting disinfection.

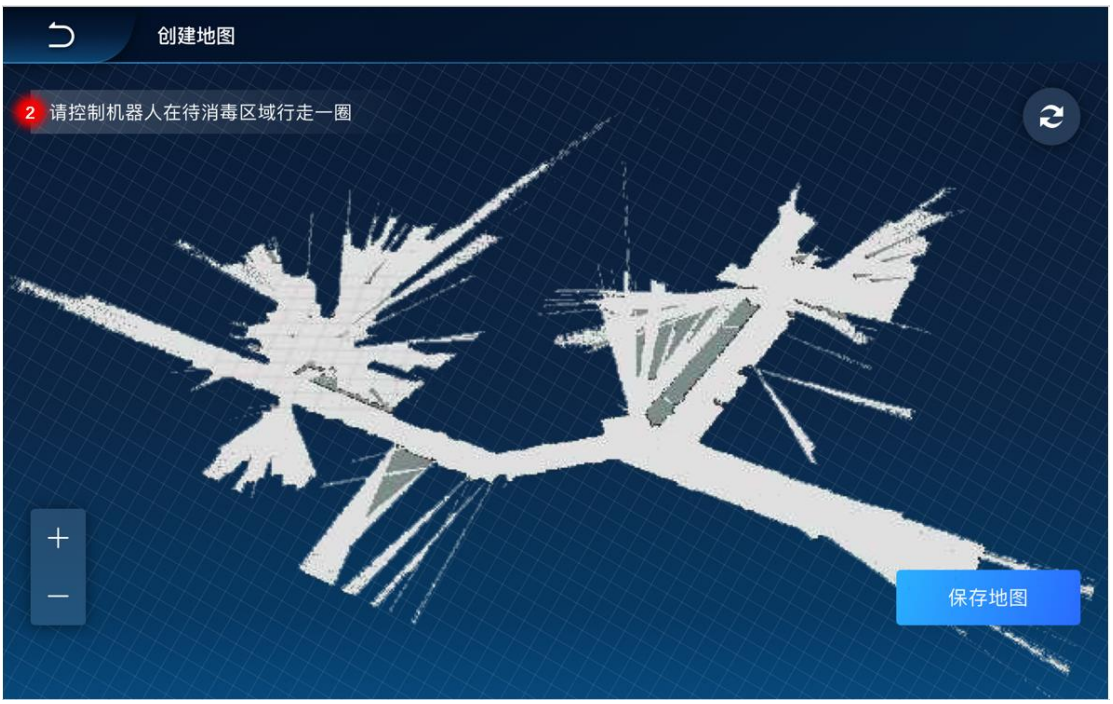

(3) Click “save map”.

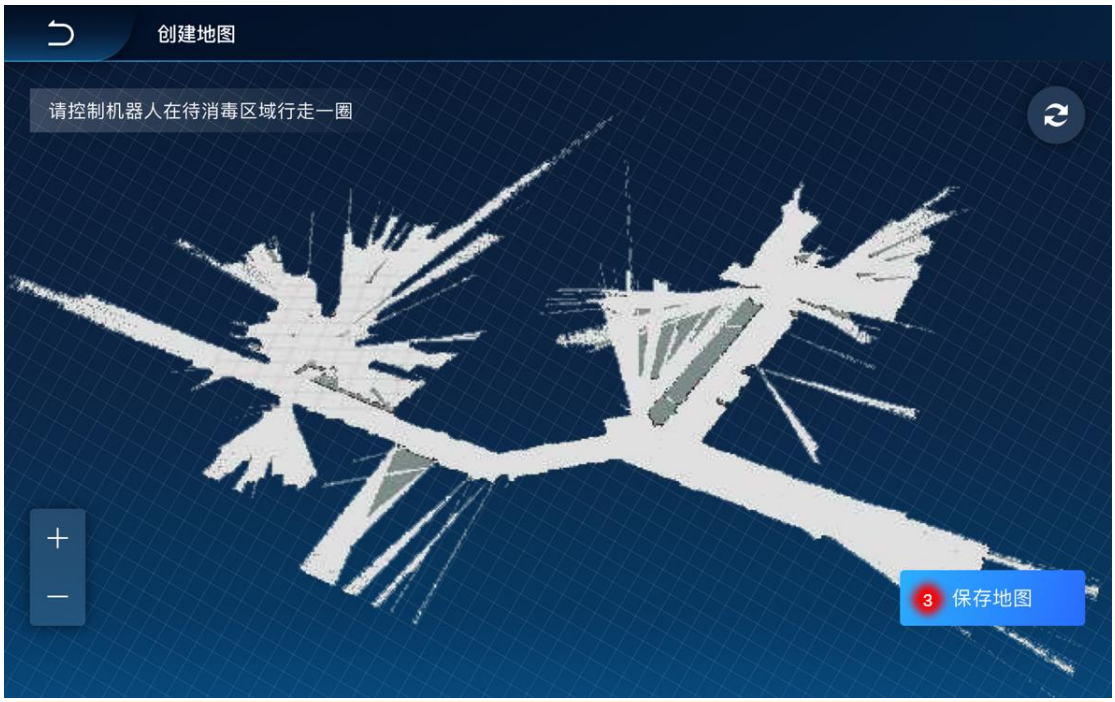

2. Create a virtual wall:

(4) Click “Map” in the top right corner, to access the map management interface.

(5) Click “Virtual wall management” to draw a virtual wall.

(6) Click to confirm the starting point and ending point of the virtual wall. Click “+” to draw a new virtual wall. Click “↩” to undo, and click “🗑” to delete.

(7) Click “Save virtual wall”.

(8) Click “⮌” to return to the map management interface.

3. Create a new route:

(9) Click “Route management”.

(10) Click “Create new route” to start creating a route.

(11) Click nodes on the map for creating a new route. Click "↰" to undo, and click "√" to end drawing and edit the route name.

(12) Enter a name for the route and click "Save". A new route is created.

2.2.2 Add a task

(1) Click “Add task” in the middle of the interface to access task settings:

Select the area for disinfection—select the disinfection duration per unit area and the disinfection type—set starting time—select whether to repeat disinfection—edit task name—select a route.

2.2.2.1 Select the area for disinfection

(2) Select an area (or multiple areas) for disinfection, and click “Next”.

2.2.2.2 Set the disinfection duration per unit area and the disinfection type

(3) Set the disinfection duration per unit area by clicking “+” or “-” to increase or decrease the disinfection duration per unit area. Set the type of disinfection as mist/UV or both. Then click “Next” to set the time for disinfection.

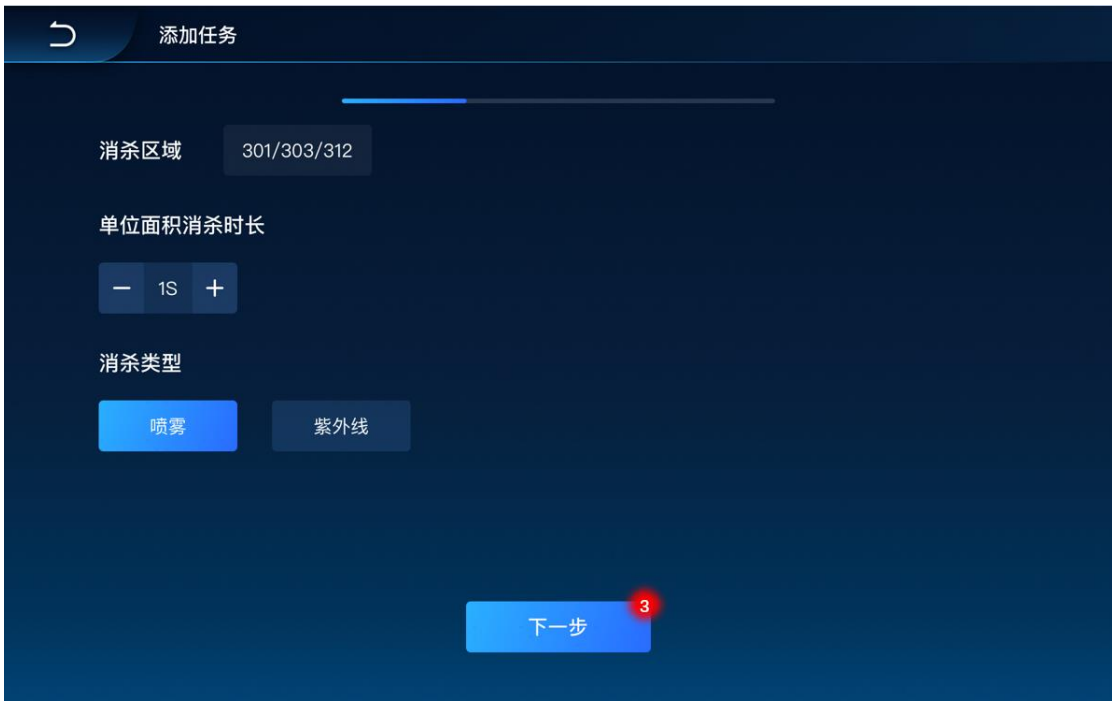

2.2.2.3 Set starting time

(4) Click “Start now” and the robot will perform the task after completion of task editing. Or click “Timed task” to set the time for the task in advance; after setting the

time for disinfection, click “Next” to select a date.

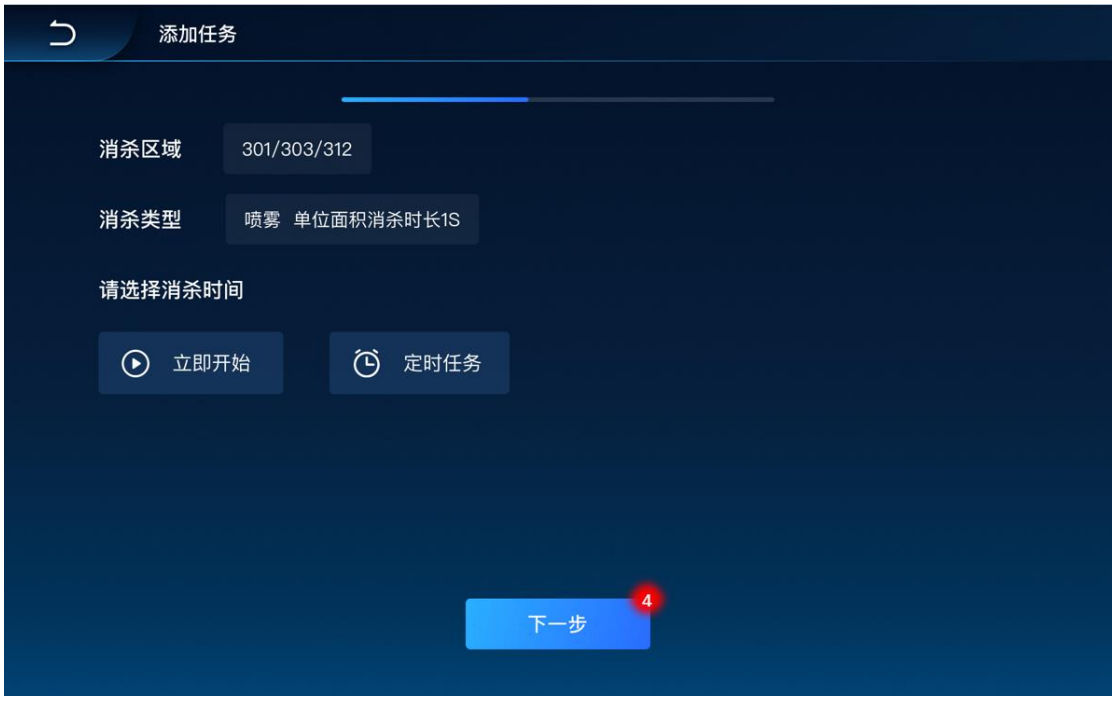

2.2.2.4 Select whether to repeat disinfection

(5) Select the date (or multiple dates) for repeated execution, and click “Next” to edit the task name.

2.2.2.5 Edit the task name

(6) Edit the task name, and click “Next” to select a route.

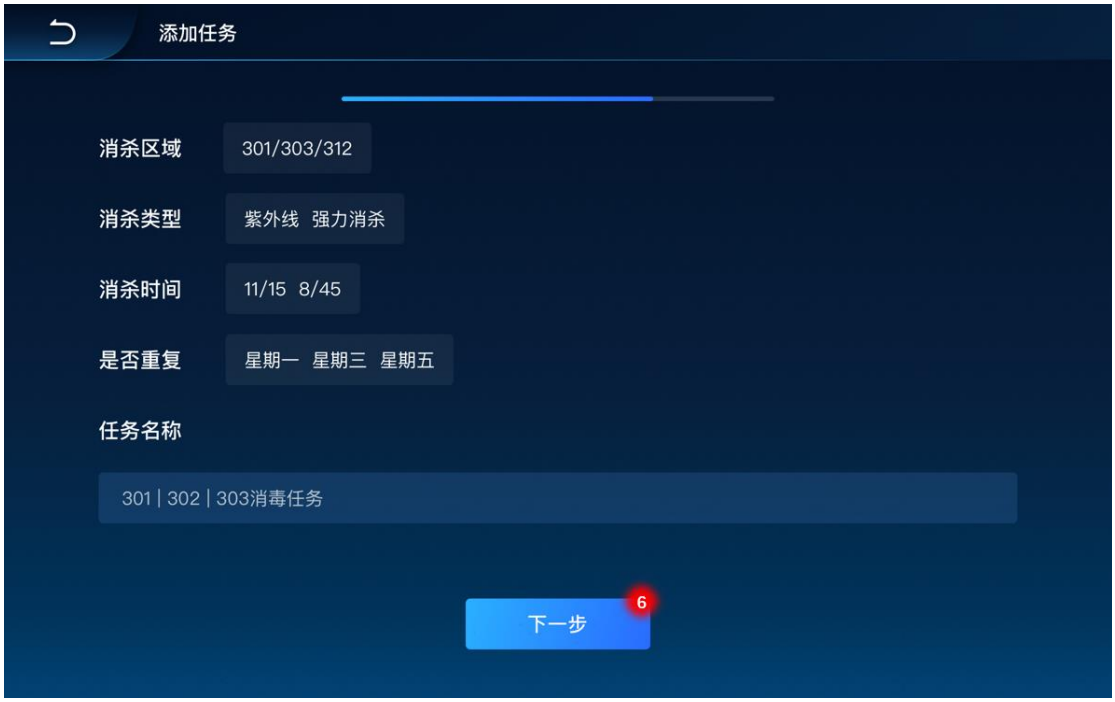

2.2.2.6 Select a route for the task

(7) Select a route for the task, and click “Confirm”.

2.2.3 Start/Delete a task

(1) Click the task display panel in the middle of the main interface, and task details will pop up.

(2) Click “Delete” or “Start” to delete or start a task.

2.2.4 Return

(1) After a disinfection task is completed, the robot will automatically return to the charging pile for charging. The user may also click “Return now” in the bottom left corner to terminate the task and demand the robot to return immediately.

IX. Charging

1. Autonomous recharge

FJ DYNAMICS disinfection robot is capable of autonomous recharge. When the two conditions below are met, the robot will autonomously return to the charging pile for charging (please ensure that the charging pile is fixed in place and powered on):

- Battery level of the robot is below 20%.
- The robot is not working, and battery level is below 100%.

2. Charge the robot manually

1. Match the remote control to the robot.

2. Push the robot to the charging pile manually.

3. Aim the back of the robot at the charging pile; then push the robot for the charging connectors of the robot and the charging pile to contact; finally, click “Return now” on App. The charging pile status indicator will flash red and green light alternatively to indicate that charging has begun.

3. Charge through the adapter

When the robot cannot be turned on normally due to battery depletion, it can be charged with the charging pile adapter following the steps below:

1. Turn off the power of the robot.

2. Detach the rear panel from the charging pile with a screwdriver, pull out the charging plug of the charging pile adapter, screw out the lid on the manual charging port, and insert the charging plug of the charging pile adapter into the manual charging port.

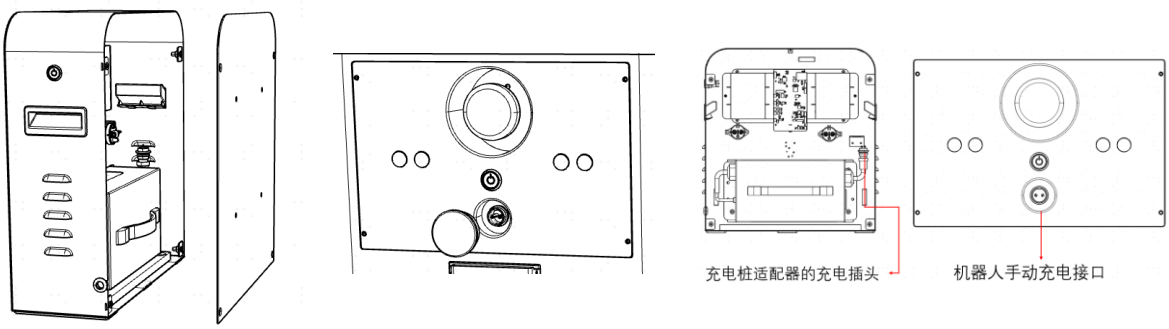

充电桩适配器的充电插头 Charging plug of the charging pile adapter

机器人手动充电接口 Manual charging port of the robot

3. After successful connection, the charging pile status indicator will flash red and green light alternatively to indicate that the robot is being charged.

4. Upon completion of charging, the charging status indicator light will turn green. Please unplug the charging pile adapter, install the rear panel onto the charging pile, and put back the lid on the manual charging port. The charge through an adapter is now completed.

X. Robot status indicator light

1. When the robot is being turned on, the indicator will flash red, green and blue light in turn at high frequency, until the robot is connected.

2. When the robot is only connected to the network, the indicator light will remain green.

3. When the robot is only connected to the remote control, the indicator will flash blue light at high frequency.

4. When the robot is networked and directly connected to the remote control, the indicator light will remain blue.

5. When the robot is paused, the indicator will flash green light at high frequency.

6. When disinfectant spray is insufficient, the indicator will flash red and green light at high frequency.

7. When the battery level is between 20%-30%, the indicator will remain red; when the battery level is below 20%, the indicator will flash red light at high frequency.

8. When the robot is being upgraded, the indicator will flash green light at low frequency.

9. When the robot is being charged, the indictor will flash green and blue light at low frequency until charging ends.

XI. Voice broadcasting scenarios

No.	Scenario		Broadcasting content	Remarks
1	Starting	High battery level and high disinfectant level	Hello, I'm FJ Little White. High battery and disinfectant level. Glad to be of service.	When powered on, the robot will automatically detect the battery and disinfectant level, and start broadcasting when both have reached the set threshold.
2		Low battery level	Hello, I'm FJ Little White. Low battery level. Please charge soon.	When powered on, the robot will automatically detect the battery and disinfectant level, and start broadcasting when both have reached the set threshold.
3		Low disinfectant level	Hello, I'm FJ Little White. Low disinfectant level. Please replenish soon.	When powered on, the robot will automatically detect the battery and disinfectant level, and start broadcasting when both have reached the set threshold.
4		Low battery level and low disinfectant level	Hello, I'm FJ Little White. Low battery and disinfectant level. Please charge and replenish soon.	When powered on, the robot will automatically detect the battery and disinfectant level, and start broadcasting when both have reached the set threshold.
5	Operating	Before operation	I have reached the destination. Disinfection will begin in 20 seconds. Please leave the room soon.	Upon arrival at the destination, the robot will start broadcasting after turning on the LED light.
6		During operation	Disinfection under way. Please stay out of the way for your safety.	The robot will broadcast once every 40 seconds.
7		After operation	Disinfection has been completed successfully. Returning soon.	The robot will broadcast upon completion of disinfection.
8	Driving	Detected human while disinfecting	Disinfection under way. You are too close. Please keep a safe distance for your health.	When the robot detects human while disinfecting, it will repeat broadcasting until

				the person leaves.
9		Detected human while driving	Make way, please. Thank you!	The robot will broadcast when meeting obstacles while driving.
10	Low battery		Battery to be depleted soon. I need charging.	The robot will broadcast when the battery level reaches the set threshold.
11	Charging		Connected to power. Charging to be completed in 4 hours.	The robot will broadcast when connected to power.
12	Charging completed		Charging completed. I will end charging automatically.	The robot will broadcast when fully charged.
13	Low disinfectant		Oops! Low disinfectant. Please replenish soon.	The robot will broadcast when the disinfectant level reaches the set threshold.

XII. Emergency handling

When the robot is in abnormal operating state or emergency arises, the user may stop the stop by pressing the emergency stop on its back. The position of the emergency brake is indicated below:

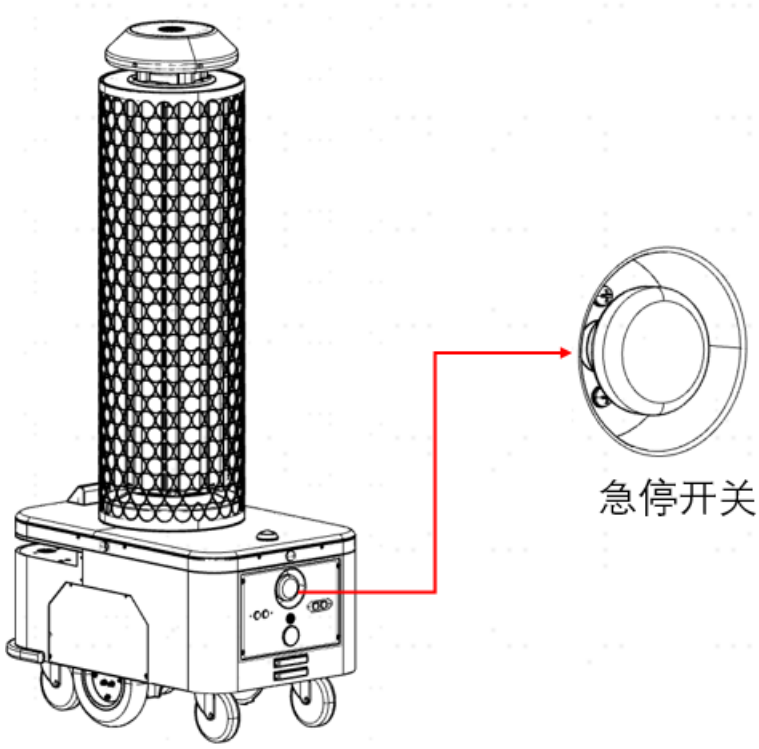

急停开关 Emergency stop

XIII. Recommended disinfectant types

3% hydrogen peroxide disinfector and 150 mg/L hypochlorous acid disinfector are recommended for FJ DYNAMICS Disinfection Robot. The disinfection effect is not guaranteed with other types of disinfectant, which may even cause damage to the machine. Please use with caution.

Suggestion: It is recommended to disinfect each room for around 10 min, and wait another 30 min to enter the room after completion of disinfection.

XIV. Hazardous substances

Hazardous substance / Component	Lead and its compounds	Mercury and its compounds	Cadmium and its compounds	Chromium VI compounds	PBB	PBDE	Remarks
Circuit board assembly	X	O	O	O	O	O	
Remote control	X	O	O	O	O	O	
Battery	X	O	O	O	O	O	
Harness	X	O	O	O	O	O	
Non flame-retardant plastic and polymer parts	O	O	O	O	O	O	
Flame-retardant plastic and polymer parts	O	O	O	O	O	O	
Metal parts	X	O	O	O	O	O	

This table is prepared in accordance with the stipulations of SJ/T 11364.

O indicates that the content of the hazardous substance in all homogenous materials of the part meets the limitation requirement in GB/T 26572.

X indicates that the content of the hazardous substance in at least one homogenous martial of the part does not meet the limitation requirement in GB/T 26572.

XV. Product list

Tablet display terminal (remote control)	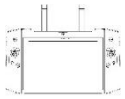
Disinfection robot	
Charging pile	
Funnel	
Measuring cup	
Stopper	
Screwdriver	
Visual QR code	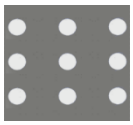
Manufacturer’s certificate	
Warranty	

Notes: Certain accessories may be packed separately. Be careful to prevent loss. Refer to the manual for the installation and use of this product. As for the installation of visual QR code, please see the Installation Instructions for Visual QR Code.

XVI. Product maintenance

Safety shield, driving wheels and driven wheels

Please check and clean the safety shield at least once every 2 weeks. Wipe with clean cotton cloth. If the bottom wheels are entangled or adhered to stuff, lift the robot for cleaning.

Sensor maintenance

The top positioning sensor and the human body detection sensor should be checked and cleaned at least once every week. Stains and damage should be handled in time, as they may block the sensors and result in abnormal operation of the machine; please clean with soft tissues or other lens cleaning products.

Body maintenance

Maintain the cleanliness of the body by wiping with clean cotton cloth. It is forbidden to lift, climb, bump, push or break the robot, or pile up stuff on it. In case of malfunction, please contact customer service and leave the handling to professional technicians.

Robot transportation

The transportation of the robot shall comply with the requirements in GB/T 4857.23-2012 for road transportation by truck with damping steel springs.

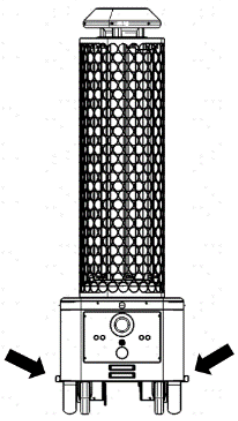

This robot is valuable equipment. When it has to be moved by man, please the following instructions shall be followed strictly: the section bars on the left and right of the chassis (indicated by arrows) are designed to bear force, through which the robot can be lifted up. To move the robot, two men can lift up the section bars on the left and right sides at the same time while maintaining balance. Please keep the robot in upright position throughout the transportation process.

QR code maintenance

Do not hang objects (e.g., balloons, wire mesh and slogans) below the QR code, or put up billboards or emergency exit signs near the QR code. Be careful to not damage the QR code during the daily cleaning and maintenance of the ceiling. Do not move or rotate the QR code.

XVII. Common faults and solutions

No.	Fault	Solutions
1	Tablet remote control not working	If the robot is not connected, please make sure the remote control is successfully connected to the robot. If the robot or the remote control is disconnected from the network, please make sure they are connected to the same network. If the robot is blocked, please clear the obstacles in its front. For other reasons, please contact customer service.
2	No Wi-Fi signal	If the local network is not working, please make sure it's connected to the Internet. Reboot the robot and the remote control. For other reasons, please contact customer service.
3	Robot cannot be charged	If the robot is not successfully docked with the charging pile, please make sure the charging connectors of the robot and the charging pile contact each other. If the charging pile is not connected to power, please connect it to power. Reboot the charging pile and the robot. For other reasons, please contact customer service.
4	Robot cannot be turned on	If the emergency stop is pressed, please release the button. If the emergency stop is destroyed, please contact customer service. If the battery level is low, please charge the robot through the adapter. For other reasons, please contact customer service.
5	Robot cannot perform automatic navigation	If the robot is outside of the map, please turn it off, push it towards the charging pile, and restart navigation. If the visual module is blocked, please clean the visual positioning module. If the LIDAR malfunctions, please check whether it's turning normally. If the collision switch malfunctions, please check whether it's crushed. If the robot is blocked, please clear the obstacles in its front. If the battery level of low, please charge the robot. For other reasons, please contact customer service.

6	UV lamp not working	Turn on or off the UV lamp manually to confirm whether it's damaged. If the UV lamp is damaged, please contact customer service for replacement.
7	Atomization not working	If the disinfectant level is low, please add disinfectant. Turn on or off atomization to confirm whether the atomizer, water pump or fan is damaged. If any atomization component is damaged, please contact customer service for replacement.
8	Robot movement out of control	Please power off immediately, and contact customer service.
9	Robot overturned	Please power off immediately, and contact customer service.
11	Aging dig tube	Please contact customer service for replacement.
12	No voice broadcasting	The voice broadcasting function is off or the volume is too low. Please reset the voice. For other reasons, please contact customer service.

XVIII. Major hardware specifications

No.	Equipment	Specifications
1	Tablet display terminal	Net weight: 2 Kg Face shell: plastic injection molding Chip: RK3288 Memory: 2 GB+8 GB System: Android 7.1 Network: Wi-Fi/image transmission Screen module: 8 inch /800*1280 Speaker: dual track Wi-Fi coverage: 100 m Wi-Fi frequency range: 2.4 GHz /5.8 GHz Language: Chinese, English, Japanese, Swedish OTA: supported Working temperature: 0-50 ℃ Battery capacity: 7.4V/10.4 Ah Cell type: Polymer batteries Working time: 10 h Charging time: 5 h Charger: 15 V/2 A Waterproof and dustproof: IP54
2	Disinfection robot	Machine size: 745*480*1561.5 mm Host material: aluminum alloy Net weight: ≤80 kg Waterproof and dustproof: IP54 Navigation method: SLAM Operating noise: ≤36 dB Walking speed: ≤1.2 m/s Maximum height of surmountable obstacle: 20 mm Maximum permissible gradient: 5° Working temperature: 0-50℃ Working time: 8 h Charging time: 4 h

		Battery capacity: 48 V/20 Ah Driving wheel size: 10 inch Wi-Fi coverage: 100 m Wi-Fi frequency range: 2.4 GHz /5.8 GHz Rated power of driving motor: 500 W UV lamp power: 80 W UV lamp quantity: 6 Sterilization rate: ≥ 99.9999 % UV lamp life: 9000 h UV irradiation direction: 360° Sterilization speed: 240 ㎡/h UV light coverage radius: 5~8 m Disinfection tank capacity: 10 L Spray particle size: ≤10 um Spray rate: 0.5 L/h
3	Charging pile	Host size (L*W*H): 160*410*440 mm Host material: aluminum alloy Host net weight: ≤10 kg Waterproof and dustproof: IP54 Working temperature: 0-50℃ Adapter input parameter: AC 100~240 V 50/60 Hz Adapter output parameter: DC 54.6 V/5 A Charging pile input parameter: AC 100~240 V/50/60 Hz Charging pile output parameter: DC 54.6 V/5 A

XIX. After-sales service

Free warranty

FJ DYNAMICS provides free warranty service within the valid warranty period of the product from the date of receipt (the warranty period of different parts varies; see the Warranty Period of Main Components for details), when the following conditions are met. If the warranty period has expired or it is not covered under free warranty service, a fee will be charged as per the price list. Please call the after-sales service hotline on the official website for maintenance.

Conditions for free warranty service

1. Quality issues occur within the specified warranty period of the product.
2. Product serial number, ex-factory label and other marks are not torn or obliterated.
3. Valid proof of purchase, receipt and order number are provided.

4. The spare parts damaged and replaced during the free warranty period belong to FJ DYNAMICS, and shall be sent back as required. Otherwise, FJ DYNAMICS is entitled to refuse to offer free warranty service.

Circumstances ineligible for free warranty service

1. Damage to the product (e.g., damaged by water, shattered by external force, and scratching and damage of external components) caused by negligence, fault, misuser or disasters.
2. The machine is disassembled by the user, or repaired and modified without authorization.
3. Damage to the product due to connection to improper parts.
4. Damage to the product due to transportation by the user or other accidents.
5. Damage to the product or injury to human, animals and plants caused by the application of the disinfection robot in non-conformity scenarios.
6. The user demands more onsite deployment or installation and debugging services for personal reasons.
7. Fault or damaged due to force majeure (e.g., earthquake and fire).
8. Other circumstances ineligible for free warranty service.

Warranty term

The warranty period shall commence with the receipt of the product according to the record of FJ DYNAMICS after-sales service system.

Circumstances eligible for return

Within 7 calendar days upon receipt of the product, if an obvious manufacturing defect is found before use, the product can be returned with all shipping fees borne by FJ DYNAMICS.

Under the following circumstances, FJ DYNAMICS is entitled to refuse the request for return

1. The product is damaged, but no request has been made for return to the deliveryman upon receipt of the product.
2. The request for return is made more than 7 calendar days since the date of receipt.
3. The product to be returned lack certain parts; its outer package, accessories, gifts and manual are incomplete; or the product appearance is damaged by human.
4. No valid proof of purchase or receipt is provided; or the receipt is faked or obliterated.
5. Collision or destruction by fire due to problems other than the product's quality issues; or the problems are caused by unauthorized refitting, incorrect installation, or failure to use and operate the product according to the instructions.
6. Labels, machine serial number, etc. are torn or obliterated.
7. Damage to the product due to force majeure (e.g., fire, flood, lightening stroke and traffic accidents).
8. If relevant product is not sent within 7 days after confirmation of return, FJ DYNAMICS is entitled to refuse acceptance.

If any of the following conditions is met, a request for exchange can be made

1. Within 15 calendar days upon receipt of the product, if an obvious manufacturing defect is found before use, the product can be exchanged with all shipping fees borne by FJ DYNAMICS.
2. Within 15 calendar days upon receipt of the product, if the unpacked product cannot be started according to the instructions or the guidance of technicians, or any quality defect due to non-human factors is found, the product can be exchanged with all shipping fees borne by FJ DYNAMICS.
3. If any damage to the product due to transportation is found while the customer unpacks and inspects the product in front of the deliveryman, the product can be exchanged with all shipping fees borne by FJ DYNAMICS.
4. In case of any obvious inconsistency between the product description and the actual product received, the product can be exchanged with all shipping fees borne by FJ DYNAMICS.

Under the following circumstances, FJ DYNAMICS is entitled to refuse the request for exchange

1. No valid proof of purchase or receipt is provided; or the receipt is faked or obliterated.
2. The product is damaged, but no request has been made for return or exchange to the deliveryman upon receipt of the product.
3. The request for exchange is made more than 15 calendar days since the date of receipt.
4. The product to be exchanged lack certain parts; its outer package, accessories, gifts and manual are incomplete; or the product appearance is damaged by human.
5. The product has no quality issues according to the testing result of the technical support department of FJ DYNAMICS.
6. Collision or destruction by fire due to problems other than the product's quality issues; or the problems are caused by unauthorized refitting, incorrect installation, or failure to use and operate the product according to the instructions.

7. Labels, machine serial number, etc. are torn or obliterated.

8. Damage to the product due to force majeure (e.g., fire, flood, lightening stroke and traffic accidents).

9. If relevant product is not sent within 7 days after confirmation of exchange, FJ DYNAMICS is entitled to refuse acceptance.

After-sales service process

1. Please contact our technical support staff at 400-777-6160.

2. Our technical support staff will fill in relevant forms according to your situation.

3. Your request will be reviewed, confirmed and processed within 7 working days.

Return & exchange and free maintenance

1. Remote technical guidance service

FJ DYNAMICS provides official online and remote technical support for customers to conduct problem diagnosis and fault handling under the guidance of technical engineers.

2. Onsite service

If onsite services are required according to the diagnosis of its technical engineers, FJ DYNAMICS will offer free onsite services by professional technicians.

3. Return processing time

After the application for return is accepted, FJ DYNAMICS will complete return processing within 7 days upon receipt of the returned product.

4. Exchange processing time

After the application for exchange is accepted, FJ DYNAMICS will complete exchange processing within 15 days upon receipt of the exchanged product.

5. Maintenance processing time

After the application for maintenance is accepted, FJ DYNAMICS will complete maintenance within 30 days upon receipt of the product for maintenance. The processing time may be prolonged due to national statutory holidays or delay in

services provided by the after-sales service centers of certain manufacturers. Thank you for your understanding.

6. Refund processing time

After the application for refund is accepted, FJ DYNAMICS will refund to the bank account provided within 10 working days upon receipt of the returned product.

After-sales service beyond the scope of warranty

FJ DYNAMICS will charge a fee for after-sales services beyond the scope of warranty (the product is beyond the warranty period or does not meet the terms of free warranty).

Charging standard for after-sales service

For after-sales services beyond the scope of warranty, the FJ DYNAMICS After-sales Service Record shall be filled in as required. The service charge of FJ DYNAMICS includes the after-sales maintenance fee and the cost of spare parts.

When the after-sales problem is handled by the customer under the remote technical guidance of technicians, FJ DYNAMICS shall only charge the cost of spare parts.

When the after-sales problem is handled by technicians through onsite service, the service charge shall include the cost of spare parts and the after-sales maintenance fee.

After-sales service consultation

If you have any questions, please contact our customer service at 400-777-6160.
Our human after-sales service is available at 9:00-12:00 and 14:00-18:00 from Monday to Friday.

XX. Warranty period of main components

Main component	Warranty period
Water pump	6 months
Visual module	12 months
USB camera	12 months
LiDAR	12 months
Algorithm board	12 months
VCU board	12 months
Voice module board	12 months
LFP battery	12 months
Wheel-side motor driver	12 months
Wheel-side motor	12 months
Plug-in charger	12 months
Five-hole atomizer + transformer	12 months
Turbo fan	12 months
Inverter	12 months
DC power	12 months
Ultrasound	12 months
Infrared human body detection sensor	12 months
Liquid level sensor	12 months

FCC warning:
Any Changes or modifications not expressly approved by the party responsible for compliance could void the user's authority to operate the equipment.

Note: This equipment has been tested and found to comply with the limits for a Class B digital device, pursuant to part 15 of the FCC Rules. These limits are designed to provide reasonable protection against harmful interference in a residential installation. This equipment generates uses and can radiate radio frequency energy and, if not installed and used in accordance with the instructions, may cause harmful interference to radio communications. However, there is no guarantee that interference will not occur in a particular installation. If this equipment does cause harmful interference to radio or television reception, which can be determined by turning the equipment off and on, the user is encouraged to try to correct the interference by one or more of the following measures:
-Reorient or relocate the receiving antenna.
-Increase the separation between the equipment and receiver.
-Connect the equipment into an outlet on a circuit different from that to which the receiver is connected.
-Consult the dealer or an experienced radio/TV technician for help.

This device complies with part 15 of the FCC Rules. Operation is subject to the following two conditions: (1) This device may not cause harmful interference, and (2) this device must accept any interference received, including interference that may cause undesired operation.

This equipment complies with RF radiation exposure limits set forth for an uncontrolled environment.
This equipment should be installed and operated with a minimum distance of 20 centimeters between the radiator and your body

FJ Dynamics Technology Co., Ltd.

400-777-6160

alliance@fjdynamics.com

502, Building 7, Xili Yangguang Industrial Zone,
Nanshan District, Shenzhen

Official website: https://www.fjdynamics.com/