User Manual

ROXX®

E.FLEX | A.FLEX

USER MANUAL

CONTENT

1. Safety Informations

1.1. General Preventive Measures 4
1.2. Regulations for equipment that connects to power mains 5
1.3. Technical warnsigns and explanation 6
1.4. Battery Safety 7

2. Introduction

2.1. About us 8
2.2. B.FLEX/A.FLEX 8

3. General Product Information

3.1. Scope of delivery 9
3.2. Control Functions 9
3.3. Features 9

4. Installation & Setup

4.1 Physical Installation and Rigging 10
4.2 Anti-theft
4.3 Connections 11
4.3.1.1 DC Power 12
4.3.1.2 Charging the battery, operating and storage 12
4.3.2. DMX Connection 13
4.3.2.1. Cable Connection 13
4.3.2.2. Wireless Connection 13

5. Operation

5.1 Start up 16
5.2 Control Display 16
5.3 Display Short Cuts 16
5.4 Configuration 18
5.4.1 Battery Charge Status 18
5.4.2 Selecting DMX Mode 18
5.4.3 Stand Alone 19
5.4.4 Slave Mode 26
5.4.5 Settings 26
5.4.6 System Info 30

6. Accessories

6.1. Filters (Light Shaping Diffusors) 31
6.2. More accessories 32

7. Technical Data / Diagrams

7.1 Technical drawings and measurements 33
7.2 IP Rating 35
7.3 Technical Data - B.FLEX 36
7.4 Technical Data - A.FLEX 38
7.5 DMX-Charts / Color Macro Charts / CCT Chart 41
7.6 RDM Templates 75
7.7 Firmware Update 77

8. Troubleshooting 77

9. Manufacturer´s Declaration 78

1. SAFETY INFORMATION

1.1. General Preventive Measures

1.1.1. Please read, understand and follow the instructions.

1.1.2. Store the instructions and information in a safe place.
Best solution is the ring binder provided by ROXX.

1.1.3. Follow all safety warnings. Under no circumstances remove safety warnings or other information from the equipment.

1.1.4. Don't use the equipment for any other intended purpose or manner.

1.1.5. Use only stable and compatible stands and/or brackets. Especially when fix installed.
Make sure the wall brackets are properly installed and safe. Make sure the device is securely installed and cannot fall.

1.1.6. Check the safety regulations applying for your country before and during installation.

1.1.7. Keep the device away from heat! Don't place/install near heaters, ovens or any source of heat.
Make sure that the device always is efficiently cooled and cannot overheat.

1.1.8. Always guarantee that ventilation and cooling slots are clean and not blocked.

1.1.9. Item must be away minimum 20cm from anything around and above it.

1.1.10. Do not use this device close to water.

1.1.11. Do not expose this equipment to flammable materials.

1.1.12. Make sure that no objects can fall into the device.

1.1.13. Only use this device with the accessories recommended by the manufacturer.

1.1.14. Always check the equipment for housing damages, so that no water can enter the device.
No containers containing liquids of any kind should be place on top of the unit.

1.1.15. Opening or modifying this device is only allowed by authorized and qualified persons.

1.1.16. All cables need to be checked after connecting the device in order to prevent damage or accidents.

1.1.17. Make sure that the device is transported safe and packed proper in order to prevent damage of any kind.

1.1.18. Once you notice improper function of your device due to damage, electric shock or anything similar, immediately unplug the unit from the mains outlet and contact our service department.

1.1.19. Clean the device with a dry cloth.

1.1.20. Observe all disposal laws applicable in your country. Especially for the packaging.

1.1.21. Plastic bags are not a toy! Keep away from children!

1.1.22. Please note that changes or modifications which are not approved by the party responsible for compliance will void the user's authority to operate the device.

1.2 Regulations for equipment that connects to power mains

1.2.1. If an earthing contact is available in the used power cord, it must used in combination with an power outlet, providing a protective ground. In no circustances should the protective ground be deactivated.

1.2.2. Do not switch on the device immediately after it has been in strong different temperatures, especially after transport. Let the device acclimatize to the temparature in the room of usage first to prevent moisture and condensation.

1.2.3. Verify that the correct voltage and frequency are available in the area of operation, before connecting the unit to the mains outlet.

1.2.4. If the plug doesn‘t fit in your mains outlet, contact your electrician.

1.2.5. Make sure your power cord/adapter/connector does not show signs of kinks/warps or is being stepped on.

1.2.6. Allwas disconnect the unit when not in use or being cleaned. Don‘t pull on the cord to disconnect. Only touch power connections with dry hands!

1.2.7. Don‘t switch the unit on/off rapidly. This may cause damage.

1.2.8. If a fuse needs to be replaced, ALWAYS make sure that exact the same fuse will be used (type and rating). Repeatedly blown fuses need to be checked by an authorised service technician.

1.2.9. In the risk of lighting strike all units need to be unpluged from the mains in order to prevent damage.

1.2.10. During installation there must be a voltage free condition.

1.2.11. The device needs to be cleaned and serviced regularly and will credit this with a longer life cycle. Dust, dirt, moist, water, smoke, nicotine or anything similar inside the unit will cause damage/malfunction.

1.2.12. The unit needs to have at least 0,5m distance to anything flammable.

1.2.13. You have to make sure that any electrical installation applys to the laws of your country. Correct power cables and applying standards have to be used.

1.3. Technical warnsigns and explanation

In order to prevent the risk of an electric shock, under no circumstances remove the cover/back or open the unit in any way! No user serviceable parts are inside. Service, maintenance and repairs should only be done by qualified service personnel or the manufacturer.

Dangerous uninsulated voltage inside the device can cause an electrical shock when opened by unqualified personnel.

Important operating and maintenance instructions apply!

Do not operate this device in tropical climates.

CAUTION! Intense LED light source! Risk of eye damage. Do not look into the light source

The housing surface of the spotlight can heat up to temperatures as high as 70 °C in regular use. Ensure that it is not possible to come into contact with the housing unintentionally. Always allow sufficient time for the lamp to cool down before dismantling, carrying out maintenance work or charging etc..

The fixture has an integrated, non-removable battery, do not attempt to remove the battery. Do not open the headlamp. To replace the battery, take the device to an authorized service center.

Fully charge the battery again immediately after discharging. Batteries that are not fully charged lose capacity and service life.
For short to medium-term storage of the headlamp, fully charge the battery.
If the headlamp will not be used for a longer period of time, use the "Storage" function inside the device settings to charge the battery. This limits the maximum charging capacity to 40% and thus preserves the life of the battery.
Do not charge the battery of the E.FLEX / A.FLEX headlamp at ambient temperatures below 0°C / 32° F and above 40°C / 104°F.
If the headlamps are charged inside a flightcase, the case lid must remain open during the entire charging process in order to avoid heat accumulation.

- This is a product which has been developed for professional usage in event technology. It is not suitable as a houshold lighting.
- NEVER stare, not even temporarily, directly into the light source.
- Don‘t use magnifiers or any other optical instrument to look at the beam.
- The effects of this device, expecially the stroboscope effect, can cause problems for sensitive people or may even cause epileptical seizures.

1.4. Battery Safety

1. Keep the battery poles away from conductive objects, such as keys, jewelry, or other materials. Otherwise, the battery may be short-circuited, resulting in injury and burns.
2. Never change the polarity of the battery's contacts.
3. Keep the battery away from excessive heat and direct sunlight. Do not place it on or in heating devices, such as microwaves, ovens, or radiators. Batteries may explode if overheated.
4. Do not attempt to modify or rework the battery, insert foreign objects into the battery, or immerse the battery in water or other liquids.
   Do not attempt to modify or rework the battery, insert foreign objects into the battery, or immerse or come into contact with water or other liquids. Failure to do so may result in fire, explosion, or other hazardous dangerous situations.
5. In case of battery acid leakage, make sure that it does not get on the skin or in the eyes. if it does, rinse immediately with clean water and consult a doctor.
6. In case of deformation, color change or overheating of batteries during charging or storage, stop using the device immediately. Immediately stop using the device and remove the battery. If you continue to use the device, battery acid may leak or a fire or explosion may occur.
7. Do not dispose of batteries in fire as they may explode. Damaged batteries may also explode.
8. Dispose of used batteries in accordance with local regulations. Improper use of the battery may result in a fire, explosion, or other hazardous situation.
9. Do not allow children or pets to chew, suck or suck on the battery. Doing so may cause damage or an explosion may occur.
10. Do not smash or puncture the battery and do not subject it to high pressure. Otherwise, it may cause a short circuit or overheating.
11. Do not drop the device or battery. If the device or battery is dropped, especially on a hard surface, it may be damaged.
12. If the standby time of the device shortens significantly, replace the battery.
13. If the device has a built-in, non-removable battery, do not attempt to remove the battery as the device may be damaged. otherwise the device may be damaged. To replace the battery, take the device to an authorized service center.

2. INTRODUCTION

2.1. About us

The name ROXX® came easily.
Combined with the concentrated knowledge and many years of experience, our three founders, who have been leaving their mark in the event and lighting industry for many years already, came together in 2020 to start this outstanding venture.
Product development, sales and marketing as well as the exceptional know-how and the profound rooting in the field of the professional lighting technology belong to our core competences and therefore guarantee extremely innovative and reliable products, excellent support and professional service in every aspect.

Designed & developed in Germany
ROXX® products are developed and designed in Germany. Always in tight consultation with our customers and experts who will eventually be working with these tools. This ensures innovative, easy-to-use and performance-oriented solutions, which provide added value for our customers.

Made to last
Recommended for permanent outdoor use, most ROXX® products feature additional corrosion protection and enhanced IP66 equipment protection, thereby providing that crucial extra for a wider range of applications. In addition to architectural or theme park applications, even fixed installations in coastal or offshore areas with high salt exposure can be reliably implemented over long periods of time.

2.2. E.FLEX A.FLEX

The E.FLEX /A.FLEX is a battery driven, dual light source fixture for professional use in indoor and outdoor applications such as wall washer, spotlight, deco-effect light and many more. The very narrow beam lens from centric LED, in combination with various filters and the single pixel controllable HALO EFX ring gives room for unlimited creativity. Due to the special designed dual-bayonet system all our one-size accessories like holographic filters, glare-shields or creative adaptors such as FLEX Light Tubes, HAT and HALO can be combined and fit tool-free to all FLEX models. Thanks to the inner bayonet, filters can be changed easily, from native 3° to circular 5°, 10°, 20°, and elliptical 5°x20° or 5°x30°. A special batwing filter creates a V-shaped beam as a wall wash effect for even more creativ effects. One central high-power LED, in combination with twenty-four ultra-bright SMD LEDs create amazing, bi-color effects in wall-wash and deco-light applications. Due to its single pixel control, ROXX® HALO EFX engine allows advanced and creative effect possibilities and a stunning eye-candy look. The individual LED´s can be controlled by any DMX source, or by using our internal preprogrammed Macro patterns and chasers. The versatile tool for wall-wash, bi-color, eye-candy effects and light tubes. The individual LED´s can be controlled by any DMX, Wireless DMX (Lumenradio® CRMX), via bluetooth by ROXX.APP, or by using our internal preprogrammed Macro patterns and chasers. 6 different sized, white light tubes can be attached to the FLEX series, creating stunning deco effects. Combining the two light sources will create spectacular fading colors or fire effects, due to the different ra-diation angles. To prevent the E.FLEX A.FLEX from theft a Kensington Security Slot is built inside.

3. GENERAL PRODUCT INFORMATION

3.1. Scope of delivery

- 1x E.FLEX A.FLEX 1x
- Safety-Eye bolt
- 1x Single DC Power Supply

We´re offering a wide range of professional accessories (optional). Please see under menu 6 or at our website www.roxxlight.com

3.2. Control Functions

- 3CH CCT, 8CH COLOR MACRO, 6/9/10/19/21CH RGB, 7/11/20/23CH DIRECT, 28/29CH PATTERN, 80CH PIXEL
- Stand Alone Functions including cinema effects, various auto programs, customisable scenes, CCT, LEE adjusted color macros and custom color templates (RGBL)
- Master & Slave (by DMX and Wireless DMX)
- Wireless DMX (Lumenradio CRMX®)
- ROXX App - Bluetooth 5.0

3.3. Features

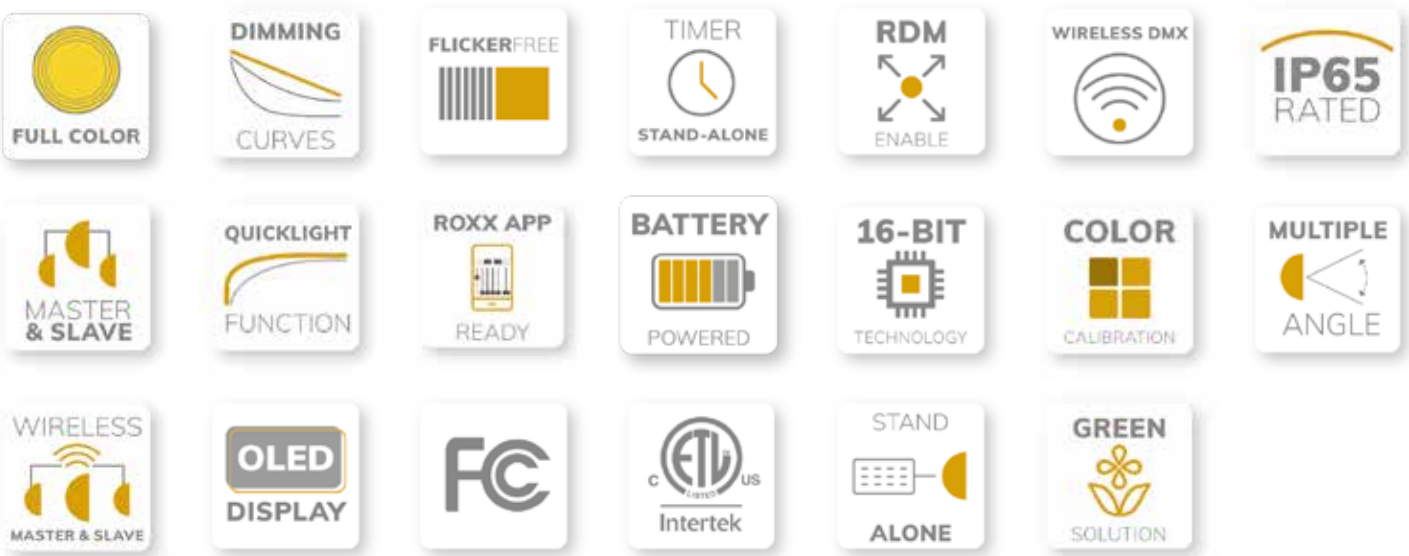

4. INSTALLATION & SETUP

4.1 Physical Installation and Rigging

ROXX E.FLEX A.FLEX may be installed in any orientation. For this purpose the product provides several options:

Standing:
For vertical high beam illumination like typical wall washing effects, the fixture is designed to use directly without optional Yoke. An integrated tilt screw allows adjustments up to 12°.

The optional fixtures yoke with its implemented rubber feet is designed to ensure a secure stand on nearly every plane surface with every possible angle/orientation of the lamp´s head. Please take care that supporting surfaces are loadable and stable.

Hanging:
A centric hole on the yoke´s bottom (d=13mm / 0,51 inch) provides a mounting point for more rigging options like a (Mini-) TV Spigot, to use the E.FLEX A.FLEX on a tripod or for example with a superclamp.

Pendant Light*:
The sophisticated and attractive design of the ROXX® E.FLEX A.FLEX makes the luminaire predestinated for the use as a pendant light, e.g. for exhibition booths, galas,... The position of the safety eyelet and the lamp body balancing makes that possible in a perfect way. Included safety eye bolt for hanging down the E.FLEX / A.FLEX.

ⓘ **Note:**
To hang down the fixture as a pendant light with only one wire and without the need of a secondary safety the setup has to be done as a „stationary installation“. Please mounting material, that is not dismountable without tools (e.g. halfcoupler with nut and chain link).

Also in this application, please take care of the current requirements and regulations for dimensioning and design of the used wires, clamps and all other possible mounting materials.
ⓘ Always take care of an adequate distance between the fixture and surrounding surfaces and be sure to keep the fixture free enough for good air circulation.

4.2 Anti-theft

To secure the FLEX headlamp against unauthorized removal, the housing includes a small opening through which a standard and commercially available Kensington® lock can be attached.

ⓘ ***Note:**
In order to provide protection from spraying water, in accordance with protection class IP65, special IP65-rated XLR connectors must be used correctly with the DMX input and output sockets.

4.3.1.2 Charging the battery, operating and storage

- As soon as the headlamp is connected to DC power and either the headlamp is switched off or the LED is not in operation, the internal battery starts charging.
- The battery charge status is shown on the display both when the headlamp is on and when it is in standby mode.
- The charging time from 0% charge status to 100% charge status is approximately 5 hours at E.FLEX and 3 hours at A.FLEX.
- The battery runtime is approx. 7.5 hours (E.FLEX and approx. 5 hours (A.FLEX) for a two-color mix (both colors at 100%). The battery runtime can be extended up to 24 hours by using the runtime function with correspondingly reduced brightness.
- The headlamp automatically calculates the brightness based on the color setting and runtime used.
- After approximately 300 charging cycles (0% - 100%), the battery capacity is still approximately 70% of the nominal capacity.
- The electronic Battery Management System protects against overcharging and deep discharge.
- The battery may only be replaced with original accessories by an authorized service center.
- Do not charge the battery of the E.FLEX / A.FLEX headlamp at ambient temperatures below 0°C and above 40°C.
- When operating the E.FLEX / A.FLEX floodlight with mains voltage, the ambient temperature must not fall below 0°C and must not exceed +40°C.
- When operating with internal rechargeable battery, the ambient temperature must not fall below -20°C and must not exceed +40°C.
- Immediately recharge the battery completely after discharging. Batteries that are not fully charged lose capacity and service life.
- For short to medium-term storage of the headlamp, fully charge the battery.
- If the headlamp will not be used for a longer period of time, use the "Storage" function inside the device settings to charge the battery. This limits the maximum charging capacity to 40% and thus preserves the life of the battery.
- If the headlamps are charged inside a flight-case, be aware the case lid must remain open during the entire charging process in order to avoid heat accumulation.
- When operating in a cold environment, battery life may be shorter than expected.
- Store the headlamp in a cool, dry place to allow optimal storage conditions for the battery.

4.3.2. DMX Connection

The E.FLEX A.FLEX is fully controllable by DMX (USITT DMX512-A standard, based on RS-485) and RDM. It can be connected using either DMX cables or via the built-in LumenRadio CRMX wireless system.

DMX Termination
on last fixture DMX out

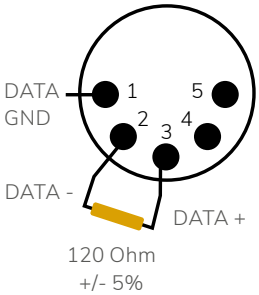

XLR pin out

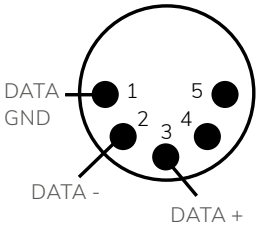

4.3.2.1. Cable Connection

If using a cabled DMX system, connect the DMX IN cable to the input connector (male 5-pin XLR connector).Once you want to connect DMX Out at the same time, please use optional ROXX DMX I/O split cable (male/female 5-pin XLR connectors). For outdoor installations, use only IP65-rated XLR connectors.
Use shielded twisted pair cable designed for RS-485 devices. The cables are daisy chained between the fixtures, and up to 32 fixtures can be connected to the same DMX link. Up to 300 meters (1000ft.) of cable is achievable with high quality DMX cables. All DMX links must be terminated in the last fixture by connecting a DMX termination plug to the last fixture's 5 pin DMX out connector. Standard microphone cable is not suitable for transmitting DMX.

E.FLEX A.FLEX -DMX I/O
Cable (Optional)

4.3.2.2. Wireless Connection*

E.FLEX A.FLEX is equipped with a LumenRadio ™ Transceiver module. This
enables the fixture to work with the following connectivity options:

- Working in Receiver Mode: receive wireless DMX- and RDM Signals via CRMX
- Working in Transmitter Mode: transmit DMX (1 universe) to other units via CRMX
- Full Control via Bluetooth 5.0 and ROXX App

The Fixture is able to send DMX-data received by CRMX or Bluetooth to its physical DMX-Output XLR Connector and hereafter, plugged in by cable, to any DMX-capable unit. For this please enable "Pass to DMX Out" inside Wireless DMX Settings.
B.FLEX/A.FLEX can act as a fully operative CRMX Receiver and be paired to an active wireless transmitter (CRMX) simultanously as being connected to a cabled DMX. The device will prioritize cabled DMX input over wireless DMX and over Bluetooth. A small indicator infront of "DMX", "CRMX" or "BLE" gives an easy overview which protocol is curently active. Please see the display graphics below.
If using a wireless DMX system, ensure that the DMX input and the DMX output are properly sealed. Connect both DMX IN and DMX OUT, or seal, in order to maintain the fixture's IP65 rating.

ⓘ ***Note: If you are using XLR for DMX and not Bluetooth we recommend to not connect to Bluetooth unless you need to since it can cause a few dropped DMX packets.**
BLE and CRMX RX are not available simoultaneously.
- **If CRMX RX is enabled and BLE will enabled after, CRMX automatically changes to TX mode.**
- **If CRMX TX operating mode is changed to RX, BLE will be disabled automatically.**

4.3.2.2. Wireless Connection

CRMX	Disabled	The indicator infront of "DMX" shows that DMX is active.
Operation Mode	n.a.	
Linked	No	
Receive Reset	No	
DMX	**Enabled**	
BLE (Bluetooth)	Disabled	

CRMX	**Enabled**	The indicator infront of "CRMX (RX)" shows that the fixture is now working in wireless DMX receive mode. "(RX)"= CRMX operating mode is set to receive
Operation Mode	**RX**	
Linked	**No**	
Receive Reset	Yes	
DMX	Disconnect	
BLE (Bluetooth)	Disabled	

CRMX	**Enabled**	The indicator infront of "CRMX (TX)" shows that the fixture is now working in wireless DMX transmit mode. "(TX)"= CRMX operating mode is set to transmit
Operation Mode	**TX**	
Linked	**No**	
Receive Reset	Yes	
DMX	Disconnect	
BLE (Bluetooth)	Disabled	

CRMX	**Enabled**	Once the fixture is linked to an external transmitter, the CRMX signal-symbole appears on upper left side. 1 dash= 1-30% signal strength 2 dashs= 31-70% signal strength 3 dashs= 71-100% signal strength
Operation Mode	**RX**	
Linked	**Yes**	
Receive Reset	Yes	
DMX	Disconnect	
BLE (Bluetooth)	Disabled	

CRMX	**Enabled**	Once the fixture is linked to an external transmitter, the CRMX signal-symbole appears on upper left side. 1 dash= 1-30% signal strength 2 dashs= 31-70% signal strength 3 dashs= 71-100% signal strength
Operation Mode	**TX**	
Linked	**Yes**	
Receive Reset	Yes	
DMX	Disconnect	
BLE (Bluetooth)	Disabled	

CRMX	**Enabled**	In case the external transmitter is switched off or out of signal range the signal-symbole starts to blink.
Operation Mode	**RX**	
Linked	**Yes, out of range**	
Receive Reset	Yes	
DMX	Disconnect	
BLE (Bluetooth)	Disabled	

4.2.2.2. Wireless Connection

CRMX	**Enabled**	An exclamation appears and blinks although the external transmitter is switched on and is inside the signal range but no DMX is connected to the external transmitter.
Operation Mode	**RX**	
Linked	**Yes, but no DMX**	
Receive Reset	Yes	
DMX	Disconnect	
BLE (Bluetooth)	Disabled	

CRMX	Disabled	The indicator infront of "BLE" shows that the fixture is now working in Bluetooth mode and is paired to ROXX App.
Operation Mode	n.a.	
Linked	No	
Receive Reset	No	
DMX	Disconnect	
BLE (Bluetooth)	**Enabled + Paired**	

CRMX	**Enabled**	The indicator infront of "BLE" shows that the fixture is now working in Bluetooth mode and is paired to ROXX App. As CRMX TX is enabeld and linked a full DMX universe is send out by CRMX (wireless DMX).
Operation Mode	**TX**	
Linked	**Yes**	
Receive Reset	No	
DMX	Disconnect	
BLE (Bluetooth)	**Enabled + Paired**	

CRMX	**Enabled**	No indicator infront of "BLE", fixture is not paired to ROXX App.
Operation Mode	**TX**	
Linked	**Yes**	
Receive Reset	No	
DMX	Disconnect	
BLE (Bluetooth)	**Enabled, not paired**	

CRMX	**Enabled**	DMX is active. As CRMX TX is enabled and linked a full DMX universe is send out by CRMX (wireless DMX).
Operation Mode	**TX**	
Linked	**Yes**	
Receive Reset	No	
DMX	**Connect**	
BLE (Bluetooth)	Enabled	

5. OPERATION

5.1 Start up*

Once the fixture is switched On, the boot process starts and the following information will appear on the display: “Ready to ROXX”, the product name and the current software version.

After this process, the fixture is ready for operation, and starts in the previously enabled mode.

5.2 Control Display*

ENTER — OLED Display with Touch-Sensitive controls

ESC — **Press ENTER** to access the selection menu for system settings or confirm changes.

△ ▽ — **Press ESC** to take a step back in the menu.

Press arrows to scroll up and down inside the menu and change values, such as DMX address.

ⓘ ***Note:**
For a smooth navigation thru the menu settings, please make sure the display surface is dry and dust free.

After approximately 1 minute of inactivity inside the menu settings, the display will automatically jump back to home screen.

5.3 Display Short Cuts*

Short Cuts
For some always recurring functions the fixture allows quick and user-friendly access at home screen over some display control short-cuts:

ENTER ⊕ ESC — **User Reset or Factory Reset***

Pressing ESC+ENTER simultaneously a Factory Reset or User Reset can be started.
By using the up/down arrows the Factory- or User Reset can be selected.
For confirming press ENTER, to jump back please press ESC.

ⓘ ***Note:**
After Factory Reset all fixture settings are set back to factory default values.
After User Reset all user selected reset functions and user default values will set back.
Also a short self-test will start immediately while dimming in and out each single color.

Display Off

ESC + ▽

Pressing ESC + arrow down simultaneously the display backlight function will set to off and the display will turn off immediately. Once a control is pressed the display backlight will turn on.

BLE enabled / disabled

ESC + △

Pressing ESC + Arrow Up simultaneously the Bluetooth will enabled or disabled.
Confirm by pressing ENTER, step back by pressing ESC.

Manual display flip function*

△ + ▽

Use the manual display flip function by pressing arrow up + arrow down simultaneously. The display will rotate 180. By pressing both arrows simultaneously again the display will flip back.

ⓘ ***Note:**
Once the display is flipped both Up / Down controls will work according to the display rotation.

Quick Light function

ENTER (hold 3 seconds)

For easy and fast operation during setting the lights the fixture includes a user-friendly Quick Light function (Daylight 5600 Kelvin). If DMX, CRMX or Bluetooth is not assigned please press and hold ENTER for 3 seconds at homescreen, after the Quick Light function will appear.
Here dimmer can be adjusted from 0-100% by using up/down arrows, to take over the dimming value please press ENTER to confirm.

5.4 Configuration

Home Screen

After boot process the fixture is ready for operation and starts in the previously enabled mode. At home screen the following information will appear, depending on the current operating mode:

A DMX Adress
B Operating Mode (DMX Mode, Quick Light or Standalone Mode)
C Next available DMX address depending on the fixtures DMX footprint
D External Data protocol (CRMX, DMX, BLE).
E CRMX status and strength
F The dot indicates the active protocol
G Battery Status
H The flash symbole indicates that DC power supply is connected. It disappears if DC power supply is disconected
Note:
CRMX (RX) CRMX Receiving Mode
CRMX (TX) CRMX Transmit Mode
BLE Bluetooth enabled

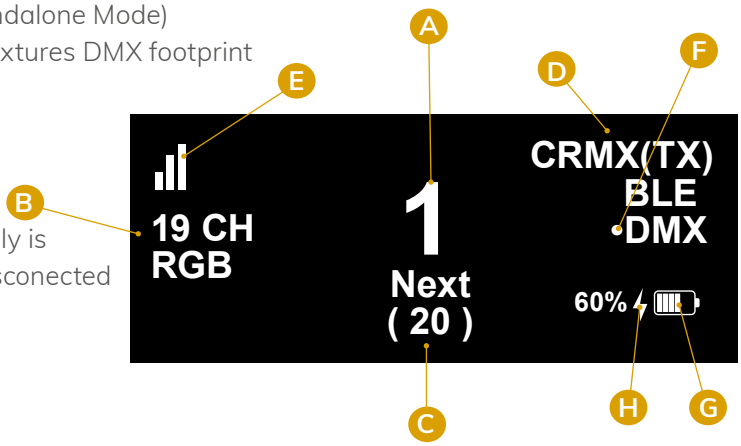

5.4.2 Selecting DMX Mode*

At home screen please press ENTER to access to the main menu (level 1).
While using UP / DOWN arrows, please select the menu item “DMX Mode” and confirm by pressing ENTER.
In the following sub-menu (level 2), you can now choose between 12 different DMX operating modes while using the UP/Down arrows and confirm by pressing ENTER or jump back by pressing ESC.
After confirmation the display will jump back to main menu (level 1). Press ESC for homescreen, here the selected DMX mode will be displayed.

ⓘ ***Note:**
For detailed information about the several DMX modes including channel assignment please see our DMX Control chart.
.

Level 1

Menu
➖ DMX Mode
Stand Alone
Slave
Settings
System Info

Level 2

DMX Mode
➖ 3CH CCT
8CH COLOR MACRO
6CH RGB
9CH RGB
10CH RGB
19CH RGB (default)
21CH RGB
28CH PATTERN
80CH PIXEL
7CH DIRECT
11CH DIRECT
20CH DIRECT

5.4.3 Stand Alone*

Press ENTER to access to main menu (level 1).
While using the UP / DOWN arrows, please select the menu item “Stand Alone” and confirm by pressing ENTER.
In the following sub-menu (level 2), you can now choose between 6 different Stand Alone operating modes (Auto, Editor, Color Macro, Quick Color, Tunable White, User Color) ,Stop Stand Alone, Timer and Color Settings functions while using the UP/Down arrows and confirm by pressing ENTER or jump back by pressing ESC.
To finally use Stand Alone programs please make sure either DMX, CRMX RX or BLE is connected to the fixture, as these protocols have priority.

Stop Stand Alone
To stop a running Stand Alone mode immediately, please select “Stop Stand Alone” and confirm by pressing ENTER. The display will automatically jump back to level 1.

Level 1

Menu
DMX Mode
➖ Stand Alone
Slave
Settings
System Info

Level 2

Stand Alone Mode
➖ Stop Stand Alone
Auto
Editor
Color Macro
Quick Color
Tunable White
User Color
Timer
Color Settings

Auto*
Select “Auto” by using the up/down arrows and press ENTER. Here at sub-menu (level 3), you can choose between 40 different Auto Programs for Center / Halo only, Center & Halo together and Stop Program. Using the Up/Down arrows you can select one of the 40 auto programs and confirm by pressing ENTER or step back by ESC.
After confirming your preferred Auto Program, you can now adjust speed and brightness at level 4. To adjust speed, please use the UP / DOWN arrows to select the menu item “Speed”, and confirm with ENTER. After use UP / DOWN arrows to adjust the speed value between 000-100 and confirm by ENTER or jump back by ESC.

To adjust brightness please select “Dim” as per the procedure previously described and confirm with ENTER. After use UP / DOWN arrows again to adjust the brightness value between 000-100 and confirm by ENTER or jump back by ESC. Once it´s confirmed or denied the display will automatically jump back to level 3.
To stop running a selected auto program please chose “Stop Program” at level 3 or "Stop Stand Alone" at level 2.
For returning back to homescreen please press ESC three times.
At homescreen the selected Stand Alone mode “Auto” and the selected program will be displayed.
ⓘ ***Note:**
Using arrows UP /DOWN at homescreen Auto programs can be directly changed according to the list.

Level 1

Menu

- DMX Mode
- ➖ Stand Alone
- Slave
- Settings
- System Info

Level 2

Stand Alone Mode

- Stop Stand Alone
- ➖ Auto
- Editor
- Color Macro
- Quick Color
- Tunable White
- User Color
- Timer
- Color Settings

Level 3

Auto

- ➖ Center
- Halo
- Center & Halo

Level 4

Center

- Stop Program
- 7-Color Fade
- 7-Color Jump
- 15-Color Fade
- 15-Color Jump
- Police RB
- Police B
- Candle Light
- Fireworks
- Red Carpet
- Welding

Level 5

Program

- ➖ Speed <0-100> **(Default 50)**
- Dim <0-**100**>

Level 4

Halo

- Stop Program
- 7-Color Fade
- 7-Color Jump
- 15-Color Fade
- 15-Color Jump
- 7-Color Chase / Fade
- 7-Color Chase / Jump
- 15-Color Chase / Fade
- 15-Color Chase / Jump
- Rainbow
- Random Pixel Strobe/10.000K
- Pixel Strobe/Random Color
- Candle Light
- Fire
- Ice
- Fireworks
- Red Carpet
- Welding

Level 5

Program

- ➖ Speed <0-100> **(Default 50)**
- Dim <0-**100**>

Level 4

Halo

- Stop Program
- 7-Color Fade / Uniform
- 7-Color Fade / Offset
- 7-Color Fade / Rainbow
- 7-Color Jump / Uniform
- 7-Color Jump / Offset
- 15-Color Fade / Uniform
- 15-Color Fade / Offset
- 15-Color Fade / Rainbow
- 15-Color Jump / Uniform
- 15-Color Jump / Offset
- Fireworks
- Red Carpet
- Welding

Level 5

Program

- ➖ Speed <0-100> **(Default 50)**
- Dim (Center) <0-**100**>
- Dim (Halo) <0-**100**>

Editor*

At Editor you have up to three customizable programs which can be defined and run from the menus.
Each of the three values contains twenty four user-definable scenes with its own values for RGBL (RAW) or RGB (Calibrated) and shutter, playing continuously in a loop. Each scene has a definable fade-in time for the transition from one color to the other and wait-time.
To define a program please press ENTER to access to main menu (level 1).
While using the UP / DOWN arrows, please select the menu item “Stand Alone” and confirm by pressing ENTER.

Select “Editor” by using the up/down arrows and press ENTER.
Here at sub-menu (level 3) you can choose between Program 1-3, Dimmer and Stop Program.
Using the Up/Down arrows you can select program 1, 2 or 3 and confirm by pressing ENTER or step back by ESC.
After confirming your preferred program, you can now choose between Scene 1-24.
Select one of the scenes and press ENTER or step back by ESC.
At level 5 you can now set your color, shutter and fade / wait time in minutes and seconds. For creating a color jump please set value for "Fade Time" to 0, and "Wait Time" to at least 1 second.
Once it´s set your first scene is programmed.
You can now jump back to level 3 by using ESC. Here your program will starts automatically.
For creating more scenes please use the same procedure.
To stop an active program please press ESC and select “Stop Program” at level 3 or "Stop Stand Alone" at level 2.
To start again, please re-select your preferred program, it will starts automatically again.
To adjust the master brightness for program 1-3, you can use the item “Dimmer” at level 3 and select between 000-100 and confirm by ENTER or jump back by ESC.

ⓘ ***Note: Once "Color Calibration" is selected under "Color Settings" inside Stand Alone, only values for RGB for the center LED are available here.**
Using UP / DOWN arrows at homescreen Editor program can be directly changed according to the list.
For choosing the right strobe effect please follow the Strobe Channel from our DMX chart at the end of this manual.

Level 1	Level 2	Level 3	Level 4	Level 5
Menu	**Stand Alone Mode**	**Editor**	**Program**	**Scene**
DMX Mode	Stop Stand Alone	Program 1	Scene 1	Red (Center)
➖ Stand Alone	Auto	➖ Program 2	Scene 2	Green (Center)
Slave	➖ Editor	Program 3	Scene 3	Blue (Center)
Set-	Color Macro	Dim <0-**100**>	...max. 24 Scenes	Lime (Center)
tings	Quick Color	Stop Program		Red (Halo)
	Tunable White			Green (Halo)
	User Color			Blue (Halo)
	Timer			
	Color Settings			

Color Macro*

44 different color macros (34x matched LEE color filters, 4 LED colors and 6 different Whites) are available as presets. For each the brightness can be adjusted separately.

Level 1	Level 2	Level 3	Level 4	Level 4
Menu	**Stand Alone Mode**	**Color Macro**	**Center**	**Halo**
DMX Mode	Stop Stand Alone	Color Off	➡ Color Off	➡ Color Off
➡ Stand Alone	Auto	➡ Center	Color Macro	Color Macro
Slave	Editor	Halo	Dimmer <0-100>	Dimmer <0-100>
Settings	➡ Color Macro			
System Info	Quick Color			
	Tunable White			
	User Color			
	Timer			
	Color Settings			

To select a color macro please press ENTER to access to main menu (level 1).
While using the UP / DOWN arrows select the menu item “Stand Alone” and confirm by pressing ENTER. After please select the item “Color Macro” by using the up/down arrows and press ENTER again.
Using UP and DOWN controls, select "Center" or "Halo" and confirm by pressing ENTER again.
At level 4 select your desired color preset and confirm with ENTER, adjust the brightness for the color preset between 000-100. Confirm by ENTER. For color blackout choose the item “Color Off”.

ⓘ **Note: Using UP / DOWN arrows at homescreen Color Macros can be changed according to the list.**

Level 4

Gels - Color Macros for Standalone Mode

Pos.	Gel Name	Color Number
1	Red	100% Red LED
2	Fire	LEE 019
3	Medium Red	LEE 027
4	Primary Red	LEE 106
5	Med Amber	LEE 020
6	Dark Amber	LEE 022
7	Deep Amber	LEE 104
8	Orange	LEE 105
9	Deep Golden Amber	LEE 135
10	Yellow	LEE 101
11	Green	100% Green LED
12	Lime Green	LEE 088
13	Moss Green	LEE 089
14	LEE Green	LEE 121
15	Primary Green	LEE 139
16	Jas Green	LEE 738

Gels - Color Macros for Standalone Mode

Pos.	Gel Name	Color Number
17	jade	LEE 323
18	Blue	100% Blue LED
19	Sky Blue	LEE 068
20	Tokyo Blue	LEE 071
21	Light Blue	LEE 118
22	Marine Blue	LEE 131
23	Med Blue	LEE 132
24	Congo Blue	LEE 181
25	Mikkel Blue	LEE 716
26	Rose Pink	LEE 002
27	Med Pink	LEE 036
28	Light Lavender	LEE 052
29	Lavender	LEE 058
30	Magenta	LEE 113
31	Mauve	LEE 126
32	Smokey Pink	LEE 127

Gels - Color Macros for Standalone Mode

Pos.	Gel Name	Color Number
33	Special Med Lavender	LEE 343
34	Ultimate Violet	LEE 707
35	Magical Magenta	LEE 795
36	Chrysalis Pink	LEE 798
37	Specia KH Lavender	LEE 799
38	Bulb White	2700K
39	Halogen White	3200K
40	Neutral White	4200K
41	Daylight White	5600K
42	Cold White I	6000K
43	Cold White II	6300K
44	Amber (only if available)	100% Amber LED
45	Lime (only if available)	100% Lime LED
46	Cyan (only if available)	100% Cyan LED

Quick Color*

The standalone mode “Quick Color” allows a direct adjustment of the single LED colors R, G, B, L Dimmer and Shutter.

Level 1

Menu
DMX Mode
➨ Stand Alone
Slave
Settings
System Info

Level 2

Stand Alone Mode
Stop Stand Alone
Auto
Editor
Color Macro
➨ Quick Color
Tunable White
User Color
Timer
Color Settings

Level 3

Quick Color	
Dimmer (C)	<**0**-255>
Dimmer (H)	<**0**-255>
Shutter	<**0**-255>
Red (C)	<**0**-255>
Green (C)	<**0**-255>
Blue (C)	<**0**-255>
Lime (C)	<**0**-255>
Red (H)	<**0**-255>
Green (H)	<**0**-255>
Blue (H)	<**0**-255>

To adjust your Quick Color please press ENTER to access to main menu (level 1).
While using the UP / DOWN arrows select the menu item “Stand Alone” and confirm by pressing ENTER. After please select the item “Quick Color” by using the up/down arrows and press ENTER again.
Using UP and DOWN controls, select your desired color and confirm with ENTER.
After you can adjust the brightness for the color between 000-255 and confirm by ENTER.
Besides the individual color mix also a master dimmer for Center- and Halo LED can be adjusted between 000-100.
For strobe effects please adjust the Shutter value between 000-255.

ⓘ ***Note: Please see detailed explanation for strobe effects inside DMX chart at the end of this manual. If “Factory Calibration” is selected in “Color Settings” only R,G,B is available here.**
Using UP/DOWN arrows at homescreen you can change Quick Color´s dimmer value.

Tunable White*

The standalone mode “Tuneable White” allows the color temperature (CCT) to be adjusted from 2.000K – 10.000K in 100K steps. Besides brightness and shutter also a +/- green and magenta correction is available.

Level 1

Menu
DMX Mode
➨ Stand Alone
Slave
Settings
System Info

Level 2

Stand Alone Mode
Stop Stand Alone
Auto
Editor
Color Macro
Quick Color
➨ Tunable White
User Color
Timer
Color Settings

Level 3

Tunable White	
CCT	<**5600**>
TINT	<**000**> (+/-127)
Dimmer	<0-**255**>
Shutter	<0-**255**>

Starting from home screen press ENTER to access to main menu (level 1).
While using the UP / DOWN arrows select the menu item “Stand Alone” and confirm by pressing ENTER.
After please select the item “Tunable White” by using the up/down arrows and press ENTER again.
Using UP and DOWN controls to select your desired menu item, confirm by ENTER and adjust the desired value by up and down controls and confirm all entries with ENTER.

ⓘ ***Note:**
Tint values

000	**= no function/neutral**
001 - 127	**= + green**
-001 to - 127	**= - green**

ⓘ ***Note: Using UP/DOWN arrows at homescreen the selected CCT value can be changed in +/- 100K steps.**
Shutter: Please see detailed explanation for strobe effects inside DMX chart at the end of this manual.

Tunable White is only available for Center LED.

User Color*
The standalone mode “User Color” allows to store up to 5 customized color presets out of Red, Green, Blue and Lime, brightness and shutter.

Level 1

Menu
DMX Mode
➖ Stand Alone
Slave
Settings
System Info

Level 2

Stand Alone Mode
Stop Stand Alone
Auto
Editor
Color Macro
Quick Color
Tunable White
➖ User Color
Timer
Color Settings

Level 3

User Color
Color 1
Color 2
Color 3
Color 4
Color 5

Level 4

User Color	
Dimmer (C)	<**0**-255>
Dimmer (H)	<**0**-255>
Shutter	<**0**-255>
Red (C)	<**0**-255>
Green (C)	<**0**-255>
Blue (C)	<**0**-255>
Lime (C)	<**0**-255>
Red (H)	<**0**-255>
Green (H)	<**0**-255>
Blue (H)	<**0**-255>

To define a User Color please press ENTER to access to main menu (level 1).
While using the UP / DOWN arrows, please select the menu item “Stand Alone” and confirm by pressing ENTER.
Select the item menu “User Color” by using the up/down controls and press ENTER.
Using UP and DOWN select your desired preset number (Color 1 -5) and confirm with ENTER.
Use UP and DOWN controls to select your desired color, confirm by ENTER and adjust the value by up and down controls between 000-255 and confirm all entries with ENTER.
With Dimmer for Center- and Halo LED you can adjust the allover brightness of your User Color. Shutter allows several strobe effects. Once your color mix is ready, jump back by ESC. Your individual color is stored under the selected color preset now.

ⓘ ***Note: All five User Colors are also available by DMX at Color Macro channel. Using one of the RGB DMX modes, only User Colors mixed out of RGB values are available. For Direct modes, both RGB and RGBL User Colors are available.**
For detailed information please see Color Macro Chart at the end of this manual.
Using UP/DOWN arrows at homescreen the Color Macros can be changed according to the list.

Shutter: Please see detailed explanation for strobe effects inside DMX chart at the end of this manual.

Timer*

Via the internal timer function, all Stand Alone modes except "Auto" and "Editor" can be conveniently faded in and out after the function is enabled in the previously activated standalone mode, without the need for an external controller. Also it remains active even the fixture is switched off and restarted. Simultaneously, the timer function is available via cable as well as via wireless DMX for master & slave operation.
The fade-in time can be set from 0 to 60 minutes, the dwell time from 1 to 24 hours and the fade-out time from 0 to 60 minutes.

Level 1

Menu
DMX Mode
➨ Stand Alone
Slave
Settings
System Info

Level 2

Stand Alone Mode
Stop Stand Alone
Auto
Editor
Color Macro
Quick Color
Tunable White
User Color
➨ Timer
Color Settings

Level 3

Timer		
Timer	<On / **Off**>	
Fade In	<**0**-60 min>	1 minute steps
Dwell Time	<**1**-24h>	1 hour steps
Fade Out	<**0**-60 min>	1 minute steps

To select “Timer” please press ENTER to access to main menu (level 1). While using the UP / DOWN arrows, please select the menu item “Stand Alone” and confirm by pressing ENTER.
Select the item menu “Timer” by using the up/down controls and press ENTER. Now you can activate / deactivate the Timer function, select “Fade In”, “Dwell Time” or “Fade Out” for the individual settings and confirm with ENTER.
In each case a three-digit number field will be displayed. Use UP and DOWN to set the value as required from 000 to 060 minutes for “Fade In” and “Fade Out”, or 001 to 024 hours for the “Dwell Time”. Confirm by pressing ENTER again.
After all time settings have been configured, please activate the timer function by selecting the submenu item “Timer On/Off” using UP and DOWN, confirm with ENTER, select “On” and confirm with ENTER again.
To disable the timer function, please select “Off” and confirm by ENTER.

ⓘ ***Note: Please don´t forget to select one of the Stand Alone modes for "Startup Mode" at "Settings".**

Color Settings*

Here at “Color Settings” you can chose your preferred working color mode for all Stand Alone color modes. Either "Color Calibration" or "RAW". Full Calibration of R, G, B and L for a maximum of color consistency from unit to unit.
Please note If this function is activated only RGB is available at User Color and Quick Color. For a maximum of saturation please chose RAW mode.

Level 1

Menu
DMX Mode
➡ Stand Alone
Slave
Settings
System Info

Level 2

Stand Alone Mode
Stop Stand Alone
Auto
Editor
Color Macro
Quick Color
Tunable White
User Color
Timer
➡ Color Settings

Level 3

Color Settings
➡ **Color Calibration**
RAW

5.4.4 Slave Mode*

Slave Mode allows same model fixtures to be controlled by the “Master” fixture via DMX or wireless DMX (CRMX). The “Master” device should run in Stand Alone mode, all “Slave” devices should set to “Slave”.

Level 1

Menu
DMX Mode
Stand Alone
➡ Slave
Settings
System Info

To select “Slave” please press ENTER to access to main menu (level 1).
While using the UP / DOWN arrows, please select the menu item “Slave” and confirm by pressing ENTER. Now this unit is set to “Slave”. Please connect the slave and the master devices (same model) either with a DMX cable or via wireless DMX and enable one of your preferred standalone mode on the master device. Once the Stand Alone mode is activated all slave devices will follow the master device. For using Master & Slave function via wireless DMX (CRMX), please activate CRMX transmit function at Master unit and CRMX receive function at all “Slave” units.
For detailed CRMX information please read chapter “Wireless DMX”.

ⓘ **Note: All devices should use same software version.**

5.4.5 Settings

Level 1

Menu
DMX Mode
Stand Alone
Slave
➡ Settings
System Info

Main Menu	Menu level 2	Menu level 3	Menu level 4	Description
Settings	Wireless DMX	CRMX	<on/**off**>	On=CRMX enabled / Off= CRMX disabled
		Operating Mode	<**receive**/transmit>	Receive= CRMX module as Receiver Transmit= CRMX module as Transmitter
		Transmit Link	<**no**/yes>	Yes= pair with CRMX devices. CRMX must be activated on all devices and the pairing must be picked up by a transmitter (Receive Reset). No= Linking disabled
		Receive Reset	<**no**/yes>	Yes = retain transmitter pairing No = do not retain transmitter pairing
		Pass to DMX Out	<**no**/yes>	Yes= incoming wireless DMX and BLE signal will be passed to wired DMX out No= incoming wireless DMX and BLE signal will not be passed to wired DMX out
		Signal Strength	0-100	CRMX signal strength
		BLE	<on/**off**>	On= BLE enabled / Off= BLE disabled
		BLE Link	<**no**/yes>	Link = starts bluetooth advertising for at least 1 minute
		BLE Password	<**000000**>	Set 6-digits user Password for connection to your mobile device (ROXXAPP)
	Battery	Runtime	4 Hours 6 Hours **8 Hours** 10 Hours 12 Hours 14 Hours 16 Hours 18 Hours 20 Hours 22 Hours 24 Hours	"Off" for maximum of brightness. Set runtime in 2h increments, based on fully charged battery
		Charging	**Continous**	Continous : charging up to 100% capacity, for short and medium term fixture storage.
			Storage	Charging up to just 40% capacity. Recommended for long term fixture storage and thus preserves the life of the battery. Once battery is charged to 40% the display backlight will be switched off automatically.
	Display	Display	<on/**off**>	On= Flip control panel display by 180° (e.g. for overhead installation) Off= normal control panel dispaly
		Backlight	<on/**off**>	On= controls permanent on, display itself will deactivate after 60 minues of incativity Off= controls and display deactivation after approximately 1 minute of inactivity
		Auto Lock	<on/**off**>	On= Automatically locks the controls after approximately 1 minute of inactivity. After attempted input the display shows: „Locked!“ Unlock process: press arrows up, down, up, down consecutively
	Startup Mode (using last adjustments of specific Standalone Modes)	**DMX**		Select your default operating mode when fixture is powered on
		Auto		
		Editor		
		Color Macro		
		Quick Color		
		Tunable White		
		User Color		

Settings	DMX Fail	**Hold**		Hold= last command retains
		Blackout		Blackout= Activates Blackout
		Emergency Light		Emergency Light= Fixtures changes to 5600K
	AC Fail	**Hold**		Hold= last command retains
		Blackout		Blackout= Activates Blackout
		Emergency Light		Emergency Light= Fixtures changes to 5600K
	Dimmer Curve	**Linear**		Linear= Light intensity increases linear with DMX value
		Exponential		Exponential= Light intensity can be set more smooth at lower DMX values and broadly at higher DMX values.
		Logarithmic		Light intensity can be broadly adjusted at lower DMX values and more smooth at higher DMX values
		S-Curve		Light intensity can be adjusted smoothly at lower and higher DMX values and broadly at medium DMX values
Settings	Dimmer Response	**LED**		The LED responds abruptly to it´s DMX values
		Halogen		The LED responds similar to a halogen fixture with soft changes at brightness.
	Color Calibration	**Full Calibration**	Color & CCT Calibration	
		CCT Calibration	CCT only (RAW Colors)	
	RAW Balance (affects RAW Mode in DMX and Stand Alone Modes	**RAW**		(R,G,B,L with maximum value of brightnes)
		User Calibration	Red (C) <0-**255**> Green (C)<0-**255**> Blue (C) <0-**255**> Lime (C) <0-**255**> Red (H) <0-**255**> Green (H)<0-**255>** Blue (H) <0-**255**>	
	LED Frequency	800 Hz		Select preferred LED PWM frequency
		1200 Hz		
		2000 Hz		
		3600 Hz		
		12000 Hz		
		25000 Hz		
	Factory / User Reset	Factory Reset	Are you sure to reset? Confirm by pressing EN-TER, cancel with ESC	Restores all factory defaults including User Colors, but no User defaults.
		User Reset	Are you sure to reset? Confirm by pressing ENTER, cancel with ESC	Restores all User Reset according to the User Preset List. Timer Function and DMX adress restore to Factory default. Once User Reset is activated a fixture self test will start.

Main Menu	Menu level 2	Menu level 3	Menu level 4	Menu Level 5	Description
Settings	Factory / User Reset	User Reset List	DMX Mode.	3CH CCT / 8CH Color Macro / 6CH RGB / 9CH RGB / 10CH RGB /**19CH RGB** / 21 CH RGB / 28CH PATTERN / 80CH PIXEL / 7CH DIRECT / 11CH DIRECT / 20CH DIRECT / 23CH DIRECT / 29CH PATTERN	Select your User Reset defaults
			CRMX	<on/**off**>	
			CRMX Operating Mode.	<**receive**/transmit>	
			CRMX Receive Reset.	<**no**/yes>	
			BLE	<on/**off**>	
			BLE Link	<**no**/yes>	
			BLE Password	<000000>	
			CRMX Pass to DMX Out.	<**no**/yes)	
			Runtime	<off/4-24h> (8hours default)	
			Charging	<**Continous** / Storage>	
			Backlight	<on/**off**>	
			Auto Lock	<on/**off**>	
			Startup Mode	<**DMX**/Auto/Editor/Color Macro, Quick Color, Tunable White User Color>	
			DMX Fail	<**Hold**/Blackout/Emergency (5600K)>	
			AC Fail	<**Hold**/Blackout/Emergency (5600K)>	
			Dimmer Curve	<**Linear**, Exponential, Logarithmic, S-Curve>	
			Dimmer Response	<**LED**, Halogen>	
			Color Calibration	**Full Calibration** / CCT Calibration	
			RAW Balance	**RAW** / User Calibration	
			LED Frequency	<800Hz, **1200Hz**, 2000Hz, 3600Hz, 12000Hz, 25000Hz>	

Dimmer Curves

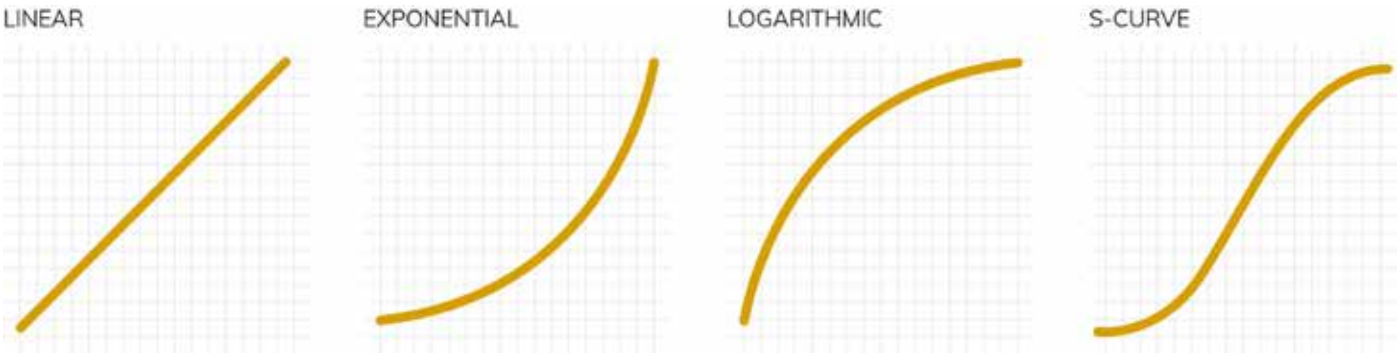

5.4.6 System Info

Level 1

Menu
DMX Mode Stand Alone Slave Settings ➡ System Info

Main Menu	Menu level 2	Menu level 3	Menu level 4
System Info	Firmware Version	vx.xx	Display installed firmware version
	Serial Number	103xxxxxxxx	
	RDM UID	0X6a6a0103xxxx	Display unique RDM ID for identification
	Temperatures	Celsius LED : XXX°C or Fahrenheit LED : XXX °F	Display fixture temperature by celsius and fahrenheit
	Power on Time	Total: xxxxxhours	Display fixture total power on time
	LED on Time	Total: xxxxxhours	Display LED total power on time
	Voltage	x Voltage	Display the Battery Voltage
	Errors	Errors information	Display error codes

6. ACCESSORIES

6.1 Filters (Light Shaping Diffusors)

Available filters for ROXX FLEX series with order numbers:

Filter 5°	Art.: 12907800
Filter 10°	Art.: 12907900
Filter 20°	Art.: 12908000
Filter 5° x 20°	Art.: 12908100
Filter 5° x 30°	Art.: 12908200
Filter Batwing	Art.: 12909600

Filter matrix:

Filter (Light Shaping Diffusors)	**Beam / Field Angle**	**Diameter @ 3m** (beam angle / field angle)	**E.FLEX** Illuminance @ Full / 3m	**A.FLEX** Illuminance @ Full / 3m	**E.FLEX / A.FLEX** Illuminance @ Full / 3m
Native (TIR Lens only)	2,7° / 4,2°	28 / 45cm	10.700lx	5.200lx	10.700lx
5° Filter	4,8° / 9,1°	50 / 96cm	2410lx	1353lx	2410lx
10° Filter	10,1° / 21,5°	106 / 228cm	625lx	334lx	625lx
20° Filter	21,3° / 42,3°	226 / 464cm	150lx	96lx	150lx
5° x 20° Filter	5,1° / 12,1° 18,5° / 31,3°	54/ 128cm 196 / 336cm	700lx	380lx	700lx
5° x 30° Filter	5,9° / 20,6° 21,7° / 42,1°	62 / 218cm 230 / 462cm	445lx	244lx	445lx
Batwing	n.a. (Effect Filter)	n.a. (Effect Filter)	n.a. (Effect Filter)	n.a. (Effect Filter)	n.a. (Effect Filter)

6.2 More accessories

Filter

Filter 5°	Art.: 12907800
Filter 10°	Art.: 12907900
Filter 20°	Art.: 12908000
Filter 5° x 20°	Art.: 12908100
Filter 5° x 30°	Art.: 12908200
Batwing	Art.: 12909600

Tubes

Tube XS	Art.: 12907201
Tube S	Art.: 12907301
Tube M	Art.: 12907401
Tube L	Art.: 12907501
Tube XL	Art.: 12907601
Tube XXL	Art.: 12907701

Hat
Art.: 12908502

Halo
Art.: 12908601

Half Anti-Glare
Art.: 12908301

Full Anti-Glare
Art.: 12908401

Yoke silver
Art.: 12907004

Yoke black
Art.: 12907001

Groundplate
Art.: 12908801

Base Extension
Art.: 12908701

Ground Spike
Art.: 12909701

Touring PSU Set
A.FLEX
Art.: 12909231 EU
Art.: 12909232 INT

Touring PSU Set
E.FLEX
Art.: 12909331 EU
Art.: 12909332 INT

Single PSU E.FLEX
Art.: 12909100

Single PSU A.FLEX Art.:
12909000

Safety Cable Tubes
Art.: 12908900

M4 Adapter
Art.: 12909800

7. TECHNICAL DATA / DIAGRAMS

7.1 Technical drawings and measurements - E.FLEX

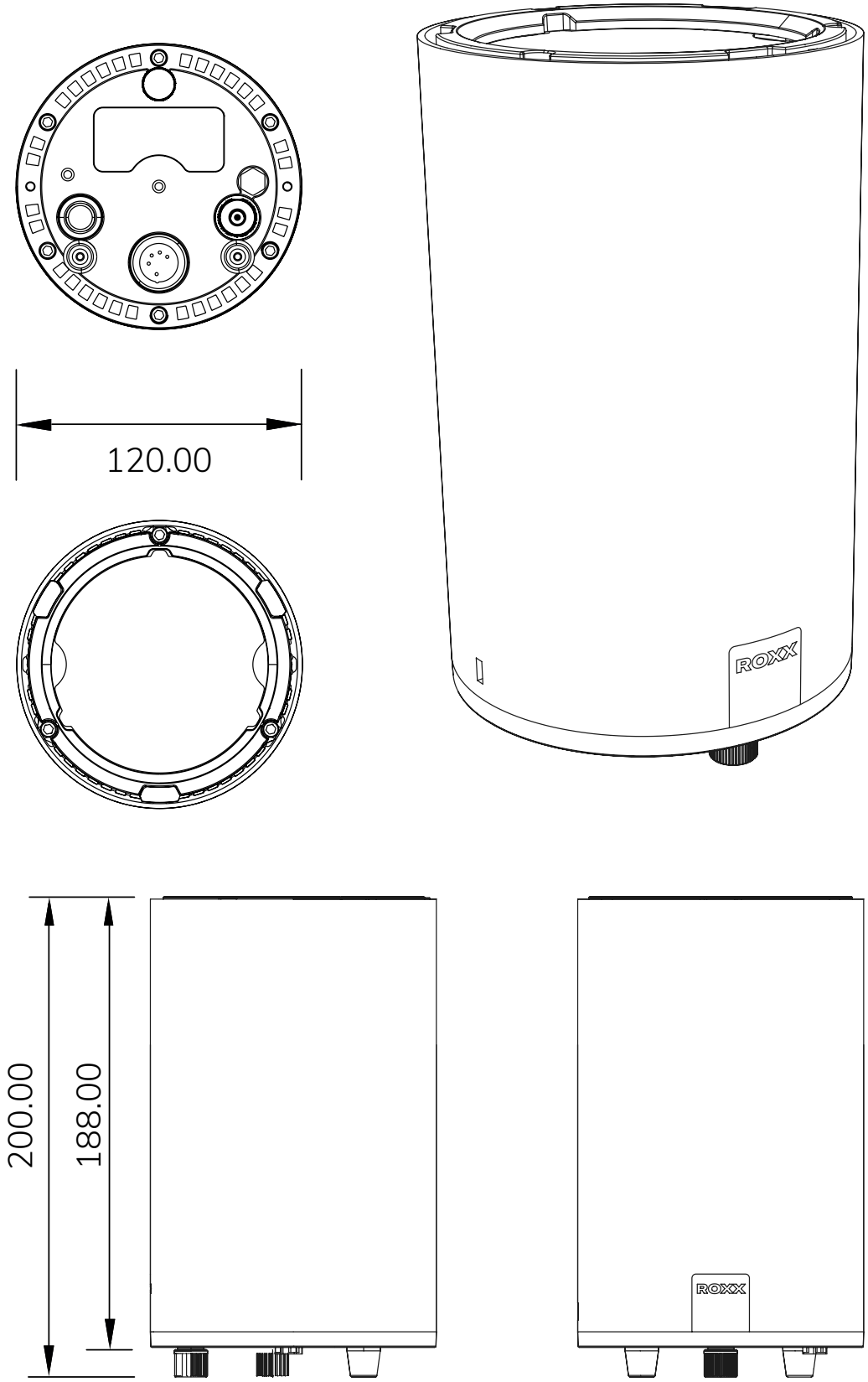

7. TECHNICAL DATA / DIAGRAMS

7.1 Technical drawings and measurements - A.FLEX

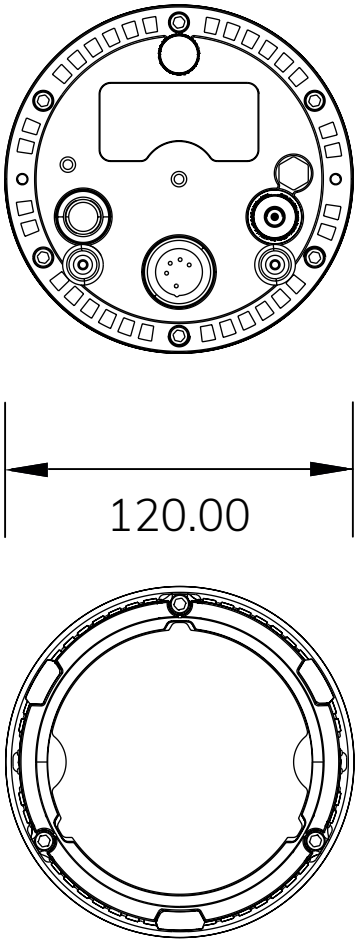

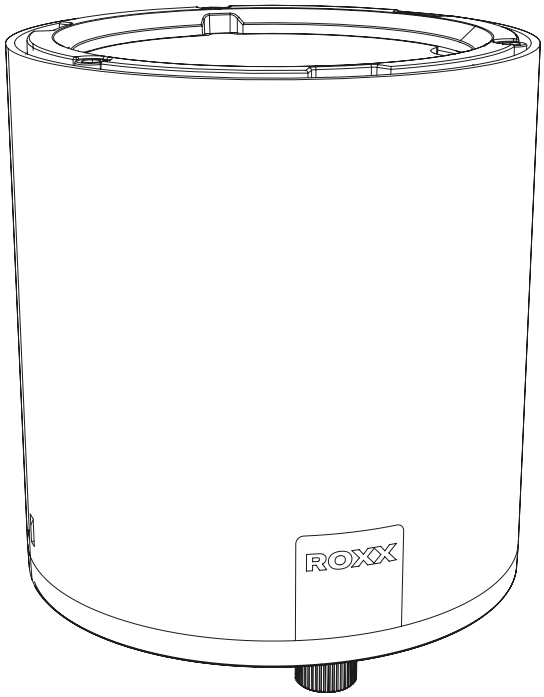

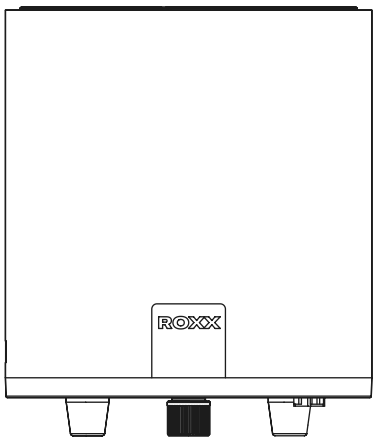

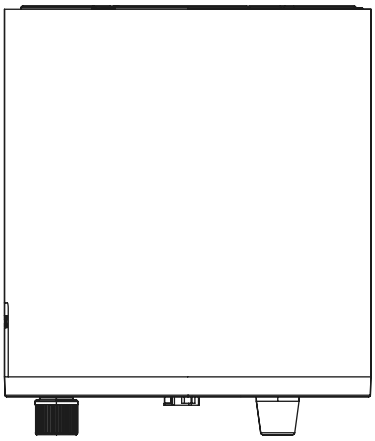

7.2 IP Rating

ROXX products conform to officially classified IP standard levels. E.FLEX /A.FLEXi is rated to IP65 when using the covers for the housing parts. IP stands for Ingress Protection and IP65, according to classified standard, means shielded against dust and high-pressure jets of water from any side.

Ingress **P**rotection

6 5

Protected against a solid object exceeding 50mm, for example, a hand.	1	1	Protected against vertically falling water drops. Limited infiltration is permitted.
Protected against a solid object exceeding 12.5mm, for example, a finger.	2	2	Protected against vertically falling water drops when the enclosure is tilted up to 15 degrees from the vertical. Limited infiltration is permitted.
Protected against a solid object exceeding 2.5mm, for example, a screwdriver.	3	3	Protected against water spray up to 60 degrees from the vertical. Limited infiltration is permitted.
Protected against a solid object exceeding 1mm, for example, a wire.	4	4	Protected against splashes of water from all directions. Limited infiltration is permitted.
Dust protected. Limited ingress of dust allowed. Does not affect the operation of the device.	5	5	Protected against water jets. Limited infiltration is permitted.
Dustproof. No infiltration of dust.	6	6	Protected against strong water jets. Limited infiltration is permitted.
		7	Protected against the impact of being immersed in water between 15cm and 1m for 30 minutes.
		8	Protected against the impact of being immersed in water under pressure for prolonged periods of time.

7.3 Technical Data - E.FLEX

Photometrics	
LED expected lifetime	50.000 hours
Lightsource	1x40W RGBL
Type of optical system	Total Internal Reflection lens (TIR)
LED PWM Frequency	selectable 800Hz, 1.200Hz, 2.000Hz, 3.600Hz, 12kHz, 25kHz
Beam angles (50%)	2,7° (native) 4,8° (with 5° Filter) 10,1° (with 10° Filter) 21,3° (with 20° Filter) 5,1° / 18,5° (with elliptical Filter 5°x20°) 5,9° / 21,7° (with elliptical Filter 5°x30°)
Maximum field angle (10%)	4,2° (native) 9,1° (with 5° Filter) 21,5° (with 10° Filter) 42,3° (with 20° Filter) 12,1° / 31,3° (with elliptical Filter 5°x20°) 20,6° / 42,1° (with elliptical Filter 5°x30°)
Color temperature range	2.000-10.000K
CRI/Ra	88
TLCI	75
Efficancy (max)	25,22 lm/W
Luminous flux	1.085 lm
illuminance Lux @ 3m (2,7° native)	10.700lx
illuminance Lux @ 3m (with 5° Filter)	2410lx
illuminance Lux @ 3m (with 10° Filter)	625lx
illuminance Lux @ 3m (with 20° Filter)	150lx
illuminance Lux @ 3m (with elliptical Filter 5°x20°)	700lx
illuminance Lux @ 3m (with elliptical Filter 5°x30°)	445lx
Thermal Characteristics	
Cooling	combination of heatpipe & convection cooling
Humidity (max.)	95%
Temperature range, Operating on Battery	-20°C to 40°C
Temperature range, Start-Up on Battery	-20° to 40°C
Temperature range, Operating on DC Power Supply	0°C to 40°C
Temperature range, Start-Up on DC Power Supply	0°C to 40°C
Temperature range, Storage	-10°C to 25°C
Temperature range, Charging	0°C to 40°C
Thermal Protection	Automatic overtemperature protection
Dimensions & Weight	
IP class	IP65
Body material	Aluminum, Nylon
Lens material	Tempered glass front
Net dimensions (w x h x d)	120 x 200 x 120mm
Net dimensions inches	4,72 x 7,87 x 4,72 inches
Physical Head Straight Up Height (without Yoke)	200mm (7,87 inches)

7.3 Technical Data - E.FLEX

Physical Head Straight Up Height (including optional Yoke)	250mm (9,84 inches)
Net weight (without Yoke)	2,49 kg (5,49lbs)
Net weight (including optional Yoke)	2,85 kg (6,28lbs)
Electrical Data	
Operating Volatge	100 – 240V 50/60Hz
Max power consumption	62W
Input Voltage	31V
Battery	223,11Wh / Lithium-Ionen including BMS
Lifetime	70% after 300 cycles
Battery Run Time	up to 24 hours
Charging Time (nominal)	5h
DMX Functions	
DMX Functions	Dimmer Center, Dimmer Fine Center, Dimmer Halo, Dimmer Backlight Halo, Shutter Center, Shutter Halo, Shutter Backlight Halo, Duration Shutter Center, Red Center, Red Fine Center, Green Center, Green Fine Center, Blue Center, Blue Fine Center, Lime Center, Lime Fine Center, Red Halo, Green Halo, Blue Halo, Red Backlight Halo, Green Backlight Halo, Blue Backlight Halo, CTC Center , CTC Halo, CTC Backlight Halo, Color Macro Center, Color Macro Crossfade Center, Color Macro Halo, Color Macro Crossfade Halo, Color Macro Backlight Halo, Color Macro Crossfade Backlight Halo, Effect Pattern, Effect Pattern Speed, Effect Pattern Transition, Pixel RGB 1-24, Device Settings
DMX channels	3CH CCT, 8CH COLOR MACRO, 6/9/10/19/21CH RGB, 7/11/20/23CH DIRECT, 28/29CH PATTERN, 80CH PIXEL
DMX modes	14
Protocol	CRMX, W-DMX™ G2, W-DMX™ G3, W-DMX™ G4, W-DMX™ G4S USITT DMX512A RDM ANSI E1.20 Bluetooth Low Energy (BLE)
Setting and addressing	OLED graphical display / 4 controls RDM ANSI E1.20
Standalone mode	Auto Program, Editor, Color Macro, Quick Color, Tunable White, User Color, Timer
Wireless DMX	Lumenradio with RDM (CRMX)
indicator	OLED graphical display
controls	4 touch sensitive, backlighted controls
Strobe	0-20Hz
DMX I/O	IP65 Neutrik DMX socket Low-voltage socket for external power supply
Power In	IP65 Neutrik DMX socket Low-voltage socket for external power supply
Included / Optional	
Included items	Single DC Power Supply, Safety Eye Bolt
Optional Accessories	YOKE, FILTER (5°, 10°, 20°, 5°x20°, 5°x30°, Batwing) TUBE (S, M, L, XL, XXL, HAT, GROUND PLATE , BASE EXTENSION, HALO, FULL ANTI-GLARE SHIELD, HALF ANTI-GLARE SHIELD, SPIKE, DMX Y-CABLE, SINGLE PSU, TOURING PSU SET EU / INT, M4 / 1/4" ADAPTER
Color options	Black – RAL 9004 (Standard) White – RAL 9010 (On Request) Silver (on request) Custom color – any RAL on request

7.3 Technical Data - E.FLEX

Installation	
Mounting point on fixture	1x centric M4, optional M4/1/4" adapter for multifunctional clamps
Mounting point by optional Yoke	centric 13mm / 1/2" hole
Orientation	Any
Rigging possibilities	Hanging or ceiling / pendant mount
Safety features	rear mount for safety wire
Minimum distance from flammable materials	0,3 meters (11,8 inch)

7.4 Technical Data - A.FLEX

Photometrics	
LED expected lifetime	50.000 hours
Lightsource	1x15W RGBL
Type of optical system	Total Internal Reflection lens (TIR)
LED PWM Frequency	selectable 800Hz, 1.200Hz, 2.000Hz, 3.600Hz, 12kHz, 25kHz
Beam angles (50%)	2,7° (native) 4,8° (with 5° Filter) 10,1° (with 10° Filter) 21,3° (with 20° Filter) 5,1° / 18,5° (with elliptical Filter 5°x20°) 5,9° / 21,7° (with elliptical Filter 5°x30°)
Maximum field angle (10%)	4,2° (native) 9,1° (with 5° Filter) 21,5° (with 10° Filter) 42,3° (with 20° Filter) 12,1° / 31,3° (with elliptical Filter 5°x20°) 20,6° / 42,1° (with elliptical Filter 5°x30°)
Color temperature range	2.000-10.000K
CRI/Ra	88
TLCI	75
Efficancy (max)	30,63 lm/W
Luminous flux	520 lm
illuminance Lux @ 3m (2,7° native)	5.200lx
illuminance Lux @ 3m (with 5° Filter)	1353lx
illuminance Lux @ 3m (with 10° Filter)	343lx
illuminance Lux @ 3m (with 20° Filter)	96lx
illuminance Lux @ 3m (with elliptical Filter 5°x20°)	380lx
illuminance Lux @ 3m (with elliptical Filter 5°x30°)	244lx
Thermal Characteristics	
Cooling	combination of heatpipe & convection cooling
Humidity (max.)	95%
Temperature range, Operating on Battery	-20°C to 40°C
Temperature range, Start-Up on Battery	-20° to 40°C
Temperature range, Operating on DC Power Supply	0°C to 40°C
Temperature range, Start-Up on DC Power Supply	0°C to 40°C
Temperature range, Storage	-10°C to 25°C
Temperature range, Charging	0°C to 40°C
Thermal Protection	Automatic overtemperature protection

7.4 Technical Data - A.FLEX

Dimensions & Weight	
IP class	IP65
Body material	Aluminum, Nylon
Lens material	Tempered glass front
Net dimensions (w x h x d)	120 x 140 x 120mm
Net dimensions inches	4,72 x 5,51 x 4,72 inches
Physical Head Straight Up Height (without Yoke)	140mm (5,51 inches)
Physical Head Straight Up Height (including optional Yoke)	186mm (7,32 inches)
Net weight (without Yoke)	1,49 kg (3,28lbs)
Net weight (including optional Yoke)	1,85 kg (4,08lbs)
Electrical Data	
Operating Volatge	100 – 240V 50/60Hz
Max power consumption	35W
Input Voltage	14V
Battery	36,18Wh / Lithium-Ionen including BMS
Lifetime	70% after 300 cycles
Battery Run Time	up to 24 hours
Charging Time (nominal)	3h
DMX Functions	
DMX channels	Dimmer Center, Dimmer Fine Center, Dimmer Halo, Dimmer Backlight Halo, Shutter Center, Shutter Halo, Shutter Backlight Halo, Duration Shutter Center, Red Center, Red Fine Center, Green Center, Green Fine Center, Blue Center, Blue Fine Center, Lime Center, Lime Fine Center, Red Halo, Green Halo, Blue Halo, Red Backlight Halo, Green Backlight Halo, Blue Backlight Halo, CTC Center , CTC Halo, CTC Backlight Halo, Color Macro Center, Color Macro Crossfade Center, Color Macro Halo, Color Macro Crossfade Halo, Color Macro Backlight Halo, Color Macro Crossfade Backlight Halo, Effect Pattern, Effect Pattern Speed, Effect Pattern Transition, Pixel RGB 1-24, Device Settings
DMX modes	3CH CCT, 8CH COLOR MACRO, 6/9/10/19/21CH RGB, 7/11/20/23CH DIRECT, 28/29CH PATTERN, 80CH PIXEL
Protocol	14 CRMX, W-DMX™ G2, W-DMX™ G3, W-DMX™ G4, W-DMX™ G4S USITT DMX512A RDM ANSI E1.20
Setting and addressing	Bluetooth Low Energy (BLE) OLED graphical display / 4 controls
Standalone mode	RDM ANSI E1.20
Wireless DMX	Auto Program, Editor, Color Macro, Quick Color, Tunable White, User Color, Timer
indicator	Lumenradio with RDM (CRMX)
controls	OLED graphical display
Strobe	4 touch sensitive, backlighted controls
DMX I/O	0-20Hz
Power In	IP65 Neutrik DMX socket Low-voltage socket for external power supply

7.4 Technical Data - A.FLEX

Included / Optional	
	Single DC Power Supply, Safety Eye Bolt
Optional Accessories	YOKE, FILTER (5°, 10°, 20°, 5°x20°, 5°x30°, Batwing) TUBE (S, M, L, XL, XXL, HAT, GROUND PLATE , BASE EXTENSION, HALO, FULL ANTI-GLARE SHIELD, HALF ANTI-GLARE SHIELD, SPIKE, DMX Y-CABLE, SINGLE PSU, TOURING PSU SET EU / INT, M4 / 1/4" ADAPTER
Color options	Black – RAL 9004 (Standard) White – RAL 9010 (Standard) Silver (on request) Custom color – any RAL on request
Installation	
Mounting point on fixture	1x centric M4, optional M4/1/4" adapter for multifunctional clamps
Mounting point by optional Yoke	centric 13mm / 1/2" hole
Orientation	Any
Rigging possibilities	Hanging or ceiling / pendant mount
Safety features	rear mount for safety wire
Minimum distance from flammable materials	0,3 meters (11,8 inch)

7.5 DMX Chart

3CH CCT	28CH PATTERN
8CH COLOR MACRO	80CH PIXEL
6CH RGB	7CH DIRECT
9CH RGB	11CH DIRECT
10CH RGB	20CH DIRECT
19CH RGB (default)	23CH DIRECT
21CH RGB	29CH PATTERN

3 CH CCT MODE - Color Calibrated - (Halo not controlable)				
Ch.	Function	Value	Setting	
1	Dimmer	000-255	0 - 100%	
2	CTC Center LED	000 - 004	5600K	according to CTC chart
		005-226	2000K-6500K linear in 20-21K steps (please see detailed CTC chart)	
		182-182	5600K	
		226-226	6500K	
		227-255	6621K-10.000K linear in 120-121K steps (please see detailed CTC chart)	
3	Tint Center LED (affects CTC)	0	No function	
		001-127	Magenta -> Neutral	
		128-128	Neutral	
		129-255	Neutral -> Green	

8 CH COLOR MACRO MODE - Color Calibrated			
Ch.	Function	Value	Setting
1	Dimmer Center	000-255	0 - 100%
2	Shutter Center	000 - 019	No function
		020 - 024	Shutter open
		025 - 064	Strobe 1 (fast ⊖ slow)
		065 - 069	Shutter open
		070 - 084	Strobe 2: opening pulse (fast ⊖ slow)
		085 - 089	Shutter open
		090 - 104	Strobe 3: closing pulse (fast ⊖ slow)
		105 - 109	Shutter open
		110 - 124	Strobe 4: random strobe (fast ⊖ slow)
		125 - 129	Shutter open
		130 - 144	Strobe 5: random opening pulse (fast ⊖ slow)
		145 - 149	Shutter open

2	**Shutter Center**	150 - 164	Strobe 6:random closing pulse (fast ⊖ slow)
		165 - 169	Shutter open
		170 - 184	Strobe 7: burst pulse (fast ⊖ slow)
		185 - 189	Shutter open
		190 - 204	Strobe 8: random burst pulse (fast ⊖ slow)
		205 - 209	Shutter open
		210 - 224	Strobe 9:sine wave (fast ⊖ slow)
		225 - 229	Shutter open
		230 - 244	Strobe 10: burst (fast ⊖ slow)
		245 - 255	Shutter open
3	**Color Macro Center**		**Please use color macros from ROXX® color macro chart**
4	**Color Macro Crossfade Center** (Transition Time between Color Macros)	000 - 005	No function
		006-105	0,1s - 10s (0,1s steps)
		106-214	11s - 119s (1s steps)
		215-244	2m - 4m50s (10s steps)
		245-255	5m - 15m (1m steps)
5	**Dimmer Halo**	000-255	0 - 100%
6	**Shutter Halo**	000 - 019	No function
		020 - 024	Shutter open
		025 - 064	Strobe 1 (fast ⊖ slow)
		065 - 069	Shutter open
		070 - 084	Strobe 2: opening pulse (fast ⊖ slow)
		085 - 089	Shutter open
		090 - 104	Strobe 3: closing pulse (fast ⊖ slow)
		105 - 109	Shutter open
		110 - 124	Strobe 4: random strobe (fast ⊖ slow)
		125 - 129	Shutter open
		130 - 144	Strobe 5: random opening pulse (fast ⊖ slow)
		145 - 149	Shutter open
		150 - 164	Strobe 6:random closing pulse (fast ⊖ slow)
		165 - 169	Shutter open
		170 - 184	Strobe 7: burst pulse (fast ⊖ slow)
		185 - 189	Shutter open
		190 - 204	Strobe 8: random burst pulse (fast ⊖ slow)
		205 - 209	Shutter open
		210 - 224	Strobe 9:sine wave (fast ⊖ slow)
		225 - 229	Shutter open
		230 - 244	Strobe 10: burst (fast ⊖ slow)
		245 - 255	Shutter open

7	**Color Macro Halo**		**Please use color macros from ROXX® color macro chart**
8	**Color Macro Crossfade Halo** (Transition Time between Color Macros)	000 - 005	No function
		006-105	0,1s - 10s (0,1s steps)
		106-214	11s - 119s (1s steps)
		215-244	2m - 4m50s (10s steps)

6 CH RGB MODE - Color Calibrated

Ch.	Function	Value	Setting
1	**Red (Center)**	000-255	0 - 100%
2	**Green (Center)**	000-255	0 - 100%
3	**Blue (Center)**	000-255	0 - 100%
4	**Red (Halo)**	000-255	0 - 100%
5	**Green (Halo)**	000-255	0 - 100%
6	**Blue (Halo)**	000-255	0 - 100%

9 CH RGB MODE - Color Calibrated

Ch.	Function	Value	Setting
1	**Red (Center)**	000-255	0 - 100%
2	**Red Fine (Center)**	000-255	0 - 100%
3	**Green (Center)**	000-255	0 - 100%
4	**Green Fine (Center)**	000-255	0 - 100%
5	**Blue (Center)**	000-255	0 - 100%
6	**Blue Fine (Center)**	000-255	0 - 100%
7	**Red (Halo)**	000-255	0 - 100%
8	**Green (Halo)**	000-255	0 - 100%
9	**Blue (Halo)**	000-255	0 - 100%

10 CH RGB MODE - Color Calibrated

Ch.	Function	Value	Setting
1	**Dimmer Center**	000-255	0 - 100%
2	**Shutter Center**	000 - 019	No function
		020 - 024	Shutter open
		025 - 064	Strobe 1 (fast ⊖ slow)
		065 - 069	Shutter open
		070 - 084	Strobe 2: opening pulse (fast ⊖ slow)
		085 - 089	Shutter open
		090 - 104	Strobe 3: closing pulse (fast ⊖ slow)
		105 - 109	Shutter open
		110 - 124	Strobe 4: random strobe (fast ⊖ slow)
		125 - 129	Shutter open
		130 - 144	Strobe 5: random opening pulse (fast ⊖ slow)
		145 - 149	Shutter open

2	**Shutter Center**	150 - 164	Strobe 6:random closing pulse (fast ⊖ slow)
		165 - 169	Shutter open
		170 - 184	Strobe 7: burst pulse (fast ⊖ slow)
		185 - 189	Shutter open
		190 - 204	Strobe 8: random burst pulse (fast ⊖ slow)
		205 - 209	Shutter open
		210 - 224	Strobe 9:sine wave (fast ⊖ slow)
		225 - 229	Shutter open
		230 - 244	Strobe 10: burst (fast ⊖ slow)
		245 - 255	Shutter open
3	**Red (Center)**	000-255	0 - 100%
4	**Green (Center)**	000-255	0 - 100%
5	**Blue (Center)**	000-255	0 - 100%
6	**Dimmer Halo**	000-255	0 - 100%
7	**Shutter Halo**	000 - 019	No function
		020 - 024	Shutter open
		025 - 064	Strobe 1 (fast ⊖ slow)
		065 - 069	Shutter open
		070 - 084	Strobe 2: opening pulse (fast ⊖ slow)
		085 - 089	Shutter open
		090 - 104	Strobe 3: closing pulse (fast ⊖ slow)
		105 - 109	Shutter open
		110 - 124	Strobe 4: random strobe (fast ⊖ slow)
		125 - 129	Shutter open
		130 - 144	Strobe 5: random opening pulse (fast ⊖ slow)
		145 - 149	Shutter open
		150 - 164	Strobe 6:random closing pulse (fast ⊖ slow)
		165 - 169	Shutter open
		170 - 184	Strobe 7: burst pulse (fast ⊖ slow)
		185 - 189	Shutter open
		190 - 204	Strobe 8: random burst pulse (fast ⊖ slow)
		205 - 209	Shutter open
		210 - 224	Strobe 9:sine wave (fast ⊖ slow)
		225 - 229	Shutter open
		230 - 244	Strobe 10: burst (fast ⊖ slow)
		245 - 255	Shutter open
8	**Red (Halo)**	000-255	0 - 100%
9	**Green (Halo)**	000-255	0 - 100%
10	**Blue (Halo)**	000-255	0 - 100%

19 CH RGB MODE - Color Calibrated (default)				
Ch.	Function	Value	Setting	
1	**Dimmer Center**	000-255	0 - 100%	
2	**Shutter Center**	000 - 019	No function	
		020 - 024	Shutter open	
		025 - 064	Strobe 1 (fast ⊖ slow)	
		065 - 069	Shutter open	
		070 - 084	Strobe 2: opening pulse (fast ⊖ slow)	
		085 - 089	Shutter open	
		090 - 104	Strobe 3: closing pulse (fast ⊖ slow)	
		105 - 109	Shutter open	
		110 - 124	Strobe 4: random strobe (fast ⊖ slow)	
		125 - 129	Shutter open	
		130 - 144	Strobe 5: random opening pulse (fast ⊖ slow)	
		145 - 149	Shutter open	
		150 - 164	Strobe 6:random closing pulse (fast ⊖ slow)	
		165 - 169	Shutter open	
		170 - 184	Strobe 7: burst pulse (fast ⊖ slow)	
		185 - 189	Shutter open	
		190 - 204	Strobe 8: random burst pulse (fast ⊖ slow)	
		205 - 209	Shutter open	
		210 - 224	Strobe 9:sine wave (fast ⊖ slow)	
		225 - 229	Shutter open	
		230 - 244	Strobe 10: burst (fast ⊖ slow)	
		245 - 255	Shutter open	
3	**Red Center**	000-255	0 - 100%	
4	**Green Center**	000-255	0 - 100%	
5	**Blue Center**	000-255	0 - 100%	
6	**CTC Center** (affects RGB)	000 - 004	5600K	according to CTC chart
		005-226	2000K-6500K linear in 20-21K steps (please see detailed CTC chart)	
		182-182	5600K	
		226-226	6500K	
		227-255	6621K-10.000K linear in 120-121K steps (please see detailed CTC chart)	
7	**Color Macro Center** (override RGB/CTC)		**Please use color macros from ROXX® color macro chart**	
8	**Color Macro Crossfade Center** (Transition Time between Color Macros)	000 - 005	No function	
		006-105	0,1s - 10s (0,1s steps)	
		106-214	11s - 119s (1s steps)	
		215-244	2m - 4m50s (10s steps)	
		245-255	5m - 15m (1m steps)	
9	**Dimmer Halo**	000-255	0 - 100%	

10	**Shutter Halo**	000 - 019	No function	
		020 - 024	Shutter open	
		025 - 064	Strobe 1 (fast ⊖ slow)	
		065 - 069	Shutter open	
		070 - 084	Strobe 2: opening pulse (fast ⊖ slow)	
		085 - 089	Shutter open	
		090 - 104	Strobe 3: closing pulse (fast ⊖ slow)	
		105 - 109	Shutter open	
		110 - 124	Strobe 4: random strobe (fast ⊖ slow)	
		125 - 129	Shutter open	
		130 - 144	Strobe 5: random opening pulse (fast ⊖ slow)	
		145 - 149	Shutter open	
		150 - 164	Strobe 6:random closing pulse (fast ⊖ slow)	
		165 - 169	Shutter open	
		170 - 184	Strobe 7: burst pulse (fast ⊖ slow)	
		185 - 189	Shutter open	
		190 - 204	Strobe 8: random burst pulse (fast ⊖ slow)	
		205 - 209	Shutter open	
		210 - 224	Strobe 9:sine wave (fast ⊖ slow)	
		225 - 229	Shutter open	
		230 - 244	Strobe 10: burst (fast ⊖ slow)	
		245 - 255	Shutter open	
11	**Red Halo**	000-255	0 - 100%	
12	**Green Halo**	000-255	0 - 100%	
13	**Blue Halo**	000-255	0 - 100%	
14	**CTC Halo** (affects RGB)	000 - 004	RAW	according to CTC chart
		005-226	2000K-6500K linear in 20-21K steps (please see detailed CTC chart)	
		182-182	5600K	
		226-226	6500K	
		227-255	6621K-10.000K linear in 120-121K steps (please see detailed CTC chart)	
15	**Color Macro Halo** (override RGB/CTC)		**Please use color macros from ROXX® color macro chart**	
16	**Color Macro Crossfade Halo** (Transition Time between Color Macros)	000 - 005	No function	
		006-105	0,1s - 10s (0,1s steps)	
		106-214	11s - 119s (1s steps)	
		215-244	2m - 4m50s (10s steps)	
		245-255	5m - 15m (1m steps)	

17	**Auto Programs** (override Center + Halo Shutter, RGB, CTC, Color Macro) **Dimmer Center + Dimmer Halo still controllable**	000 - 005	no function - Stop Program
		006-011	Center - 7 Color Fade
		012-017	Center - 7 Color Jump
		018-023	Center - 15 Color Jump
		024-029	Center - 15 Color Jump
		030-035	Center - Police RB
		036-041	Center - Police B
		042-047	Center - Candle Light
		048-053	Center - Fireworks
		054-059	Center - Red Carpet
		060-065	Center - Welding
		066-071	Halo - 7 Color Fade (all)
		072-077	Halo - 7 Color Jump (all)
		078-083	Halo - 15 Color Fade (all)
		084-089	Halo - 15 Color Jump (all)
		090-095	Halo - 7 Color Chase / Fade
		096-101	Halo - 7 Color Chase / Jump
		102-107	Halo - 15 Color Chase / Fade
		108-113	Halo - 15 Color Chase / Jump
		114-119	Halo - Rainbow
		120-125	Halo - Random Pixel Strobe / 10.000K
		126-131	Halo - Pixel Strobe / Random Color
		132-137	Halo - Candle Light
		138-143	Halo - Fire
		144-149	Halo - Ice
		150-155	Halo - Fireworks
		156-161	Halo - Red Carpet
		162-167	Halo - Weldingt
		168-173	Center & Halo - 7 Color Fade / Uniform
		174-179	Center & Halo - 7 Color Fade / Offset
		180-185	Center & Halo - 7 Color Fade / Rainbow
		186-191	Center & Halo - 7 Color Jump / Uniform
		192-197	Center & Halo - 7 Color Jump / Offset
		198-203	Center & Halo - 15 Color Fade / Uniform
		204-209	Center & Halo - 15 Color Fade / Offset
		210-215	Center & Halo - 15 Color Fade / Rainbow
		216-221	Center & Halo - 15 Color Jump / Uniform
		222-227	Center & Halo - 15 Color Jump / Offset
		228-233	Center & Halo - Fireworks
		234-239	Center & Halo - Red Carpet
		240-245	Center & Halo - Welding
		246-255	no function

18	**Auto Program Speed**	000 - 005	No function - Auto Porgram Speed Stop
		006 - 126	Auto Program fast to slow - Forward (clockwise)
		127 - 127	Stop
		128 - 255	Auto Program slow to fast - Backward (counter-clockwise)
19	**Device Settings** (please see remark *1)	000-029	No function
		030-034	Battery Runtime Off (hold 3s)
		035-039	Battery Runtime 8 hours (hold 3s)
		040-044	Battery Runtime 12 hours (hold 3s)
		045-049	Battery Runtime 16 hours (hold 3s)
		050-054	Battery Runtime 20 hours (hold 3s)
		055-059	Battery Runtime 24 hours (hold 3s)
		060-064	No function
		065-069	Display Backlight On (hold 3s)
		070-074	Display Backlight Off (hold 3s)
		075-079	No function
		080-084	DMX Fail - Blackout (hold 3s)
		085-089	DMX Fail - Hold (hold 3s)
		090-094	DMX Fail - Emergency Light (hold 3s)
		095-099	No function
		100-104	AC Fail - Hold (hold 3s)
		105-109	AC Fail - Blackout (hold 3s)
		110-114	AC Fail - Emergency Light (hold 3s)
		115-119	No function
		120-124	Linear Dimmer Curve (hold 3s)
		125-129	Exponential Dimmer Curve (hold 3s)
		130-134	Logarithmic Dimmer Curve (hold 3s)
		135-139	S-Curve Dimmer Curve (hold 3s)
		140-144	No function
		145-149	Dimmer Response LED (Hold 1,5s)
		150-154	Dimmer Response Halogen (Hold 1,5s)
		155-159	No function
		160-164	LED Frequency 800Hz (hold 3s)
		165-169	LED Frequency 1200Hz (hold 3s)
		170-174	LED Frequency 2000Hz (hold 3s)
		175-179	LED Frequency 3600Hz (hold 3s)
		180-184	LED Frequency 12kHz (hold 3s)
		185-189	LED Frequency 25kHz (hold 3s)
		190-194	No function
		195-199	Full Calibration (Colors & CCT / Hold 3s)
		200-204	CCT Calibration (RAW Colors / Hold 3s)
		205-209	Factory Reset (hold 3s) - except User Reset defaults
		210-214	User Reset (hold 3s)
		215-255	No function

21 CH RGB MODE - Color Calibrated			
Ch.	Function	Value	Setting
1	**Dimmer Center**	000-255	0 - 100%
2	**Dimmer Fine**	000-255	0 - 100%
3	**Shutter Center**	000 - 019	No function
		020 - 024	Shutter open
		025 - 064	Strobe 1 (fast ⊖ slow)
		065 - 069	Shutter open
		070 - 084	Strobe 2: opening pulse (fast ⊖ slow)
		085 - 089	Shutter open
		090 - 104	Strobe 3: closing pulse (fast ⊖ slow)
		105 - 109	Shutter open
		110 - 124	Strobe 4: random strobe (fast ⊖ slow)
		125 - 129	Shutter open
		130 - 144	Strobe 5: random opening pulse (fast ⊖ slow)
		145 - 149	Shutter open
		150 - 164	Strobe 6:random closing pulse (fast ⊖ slow)
		165 - 169	Shutter open
		170 - 184	Strobe 7: burst pulse (fast ⊖ slow)
		185 - 189	Shutter open
		190 - 204	Strobe 8: random burst pulse (fast ⊖ slow)
		205 - 209	Shutter open
		210 - 224	Strobe 9:sine wave (fast ⊖ slow)
		225 - 229	Shutter open
		230 - 244	Strobe 10: burst (fast ⊖ slow)
		245 - 255	Shutter open
4	**Red (Center)**	000-255	0 - 100%
5	**Red Fine (Center)**	000-255	0 - 100%
6	**Green (Center)**	000-255	0 - 100%
7	**Green Fine (Center)**	000-255	0 - 100%
8	**Blue (Center)**	000-255	0 - 100%
9	**Blue Fine (Center)**	000-255	0 - 100%
10	**CTC Center** (affects RGB)	000 - 004	5600K (according to CTC chart)
		005-226	2000K-6500K linear in 20-21K steps (please see detailed CTC chart) (according to CTC chart)
		182-182	5600K (according to CTC chart)
		226-226	6500K (according to CTC chart)
		227-255	6621K-10.000K linear in 120-121K steps (please see detailed CTC chart) (according to CTC chart)
11	**Color Macro Center** (override RGB/CTC)		**Please use color macros from ROXX® color macro chart**

12	**Color Macro Crossfade Center** (Transition Time between Color Macros)	000 - 005	No function	
		006-105	0,1s - 10s (0,1s steps)	
		106-214	11s - 119s (1s steps)	
		215-244	2m - 4m50s (10s steps)	
		245-255	5m - 15m (1m steps)	
13	**Dimmer Halo**	000-255	0 - 100%	
14	**Shutter Halo**	000 - 019	No function	
		020 - 024	Shutter open	
		025 - 064	Strobe 1 (fast ⊖ slow)	
		065 - 069	Shutter open	
		070 - 084	Strobe 2: opening pulse (fast ⊖ slow)	
		085 - 089	Shutter open	
		090 - 104	Strobe 3: closing pulse (fast ⊖ slow)	
		105 - 109	Shutter open	
		110 - 124	Strobe 4: random strobe (fast ⊖ slow)	
		125 - 129	Shutter open	
		130 - 144	Strobe 5: random opening pulse (fast ⊖ slow)	
		145 - 149	Shutter open	
		150 - 164	Strobe 6:random closing pulse (fast ⊖ slow)	
		165 - 169	Shutter open	
		170 - 184	Strobe 7: burst pulse (fast ⊖ slow)	
		185 - 189	Shutter open	
		190 - 204	Strobe 8: random burst pulse (fast ⊖ slow)	
		205 - 209	Shutter open	
		210 - 224	Strobe 9:sine wave (fast ⊖ slow)	
		225 - 229	Shutter open	
		230 - 244	Strobe 10: burst (fast ⊖ slow)	
		245 - 255	Shutter open	
15	**Red (Halo)**	000-255	0 - 100%	
16	**Green (Halo)**	000-255	0 - 100%	
17	**Blue (Halo)**	000-255	0 - 100%	
18	**CTC Halo** (affects RGB)	000 - 004	RAW	according to CTC chart
		005-226	2000K-6500K linear in 20-21K steps (please see detailed CTC chart)	
		182-182	5600K	
		226-226	6500K	
		227-255	6621K-10.000K linear in 120-121K steps (please see detailed CTC chart)	
19	**Color Macro Halo** (override RGB/CTC)		**Please use color macros from ROXX® color macro chart**	
20	**Color Macro Crossfade Halo** (Transition Time between Color Macros)	000 - 005	No function	
		006-105	0,1s - 10s (0,1s steps)	
		106-214	11s - 119s (1s steps)	
		215-244	2m - 4m50s (10s steps)	
		245-255	5m - 15m (1m steps)	

21	**Device Settings** (please see remark *1)	000-029	No function
		030-034	Battery Runtime Off (hold 3s)
		035-039	Battery Runtime 8 hours (hold 3s)
		040-044	Battery Runtime 12 hours (hold 3s)
		045-049	Battery Runtime 16 hours (hold 3s)
		050-054	Battery Runtime 20 hours (hold 3s)
		055-059	Battery Runtime 24 hours (hold 3s)
		060-064	No function
		065-069	Display Backlight On (hold 3s)
		070-074	Display Backlight Off (hold 3s)
		075-079	No function
		080-084	DMX Fail - Blackout (hold 3s)
		085-089	DMX Fail - Hold (hold 3s)
		090-094	DMX Fail - Emergency Light (hold 3s)
		095-099	No function
		100-104	AC Fail - Hold (hold 3s)
		105-109	AC Fail - Blackout (hold 3s)
		110-114	AC Fail - Emergency Light (hold 3s)
		115-119	No function
		120-124	Linear Dimmer Curve (hold 3s)
		125-129	Exponential Dimmer Curve (hold 3s)
		130-134	Logarithmic Dimmer Curve (hold 3s)
		135-139	S-Curve Dimmer Curve (hold 3s)
		140-144	No function
		145-149	Dimmer Response LED (Hold 1,5s)
		150-154	Dimmer Response Halogen (Hold 1,5s)
		155-159	No function
		160-164	LED Frequency 800Hz (hold 3s)
		165-169	LED Frequency 1200Hz (hold 3s)
		170-174	LED Frequency 2000Hz (hold 3s)
		175-179	LED Frequency 3600Hz (hold 3s)
		180-184	LED Frequency 12kHz (hold 3s)
		185-189	LED Frequency 25kHz (hold 3s)
		190-194	No function
		195-199	Full Calibration (Colors & CCT / Hold 3s)
		200-204	CCT Calibration (RAW Colors / Hold 3s)
		205-209	Factory Reset (hold 3s) - except User Reset defaults
		210-214	User Reset (hold 3s)
		215-255	No function

28 CH PATTERN MODE - Color Calibrated				
Ch.	Function	Value	Setting	
1	**Dimmer Center**	000-255	0 - 100%	
2	**Shutter Center**	000 - 019	No function	
		020 - 024	Shutter open	
		025 - 064	Strobe 1 (fast ⊖ slow)	
		065 - 069	Shutter open	
		070 - 084	Strobe 2: opening pulse (fast ⊖ slow)	
		085 - 089	Shutter open	
		090 - 104	Strobe 3: closing pulse (fast ⊖ slow)	
		105 - 109	Shutter open	
		110 - 124	Strobe 4: random strobe (fast ⊖ slow)	
		125 - 129	Shutter open	
		130 - 144	Strobe 5: random opening pulse (fast ⊖ slow)	
		145 - 149	Shutter open	
		150 - 164	Strobe 6:random closing pulse (fast ⊖ slow)	
		165 - 169	Shutter open	
		170 - 184	Strobe 7: burst pulse (fast ⊖ slow)	
		185 - 189	Shutter open	
		190 - 204	Strobe 8: random burst pulse (fast ⊖ slow)	
		205 - 209	Shutter open	
		210 - 224	Strobe 9:sine wave (fast ⊖ slow)	
		225 - 229	Shutter open	
		230 - 244	Strobe 10: burst (fast ⊖ slow)	
		245 - 255	Shutter open	
3	**Red Center**	000-255	0 - 100%	
4	**Green Center**	000-255	0 - 100%	
5	**Blue Center**	000-255	0 - 100%	
6	**CTC Center** (affects RGB)	000 - 004	5600K	according to CTC chart
		005-226	2000K-6500K linear in 20-21K steps (please see detailed CTC chart)	
		182-182	5600K	
		226-226	6500K	
		227-255	6621K-10.000K linear in 120-121K steps (please see detailed CTC chart)	
7	**Color Macro Center** (override RGB/CTC)		**Please use color macros from ROXX® color macro chart**	
8	**Color Macro Crossfade Center** (Transition Time between Color Macros)	000 - 005	No function	
		006-105	0,1s - 10s (0,1s steps)	
		106-214	11s - 119s (1s steps)	
		215-244	2m - 4m50s (10s steps)	
		245-255	5m - 15m (1m steps)	
9	**Dimmer Halo**	000-255	0 - 100%	

10	**Shutter Halo**	000 - 019	No function	
		020 - 024	Shutter open	
		025 - 064	Strobe 1 (fast ⊖ slow)	
		065 - 069	Shutter open	
		070 - 084	Strobe 2: opening pulse (fast ⊖ slow)	
		085 - 089	Shutter open	
		090 - 104	Strobe 3: closing pulse (fast ⊖ slow)	
		105 - 109	Shutter open	
		110 - 124	Strobe 4: random strobe (fast ⊖ slow)	
		125 - 129	Shutter open	
		130 - 144	Strobe 5: random opening pulse (fast ⊖ slow)	
		145 - 149	Shutter open	
		150 - 164	Strobe 6:random closing pulse (fast ⊖ slow)	
		165 - 169	Shutter open	
		170 - 184	Strobe 7: burst pulse (fast ⊖ slow)	
		185 - 189	Shutter open	
		190 - 204	Strobe 8: random burst pulse (fast ⊖ slow)	
		205 - 209	Shutter open	
		210 - 224	Strobe 9:sine wave (fast ⊖ slow)	
		225 - 229	Shutter open	
		230 - 244	Strobe 10: burst (fast ⊖ slow)	
		245 - 255	Shutter open	
11	**Red Halo**	000-255	0 - 100%	
12	**Green Halo**	000-255	0 - 100%	
13	**Blue Halo**	000-255	0 - 100%	
14	**CTC Halo** (affects RGB)	000 - 004	RAW	according to CTC chart
		005-226	2000K-6500K linear in 20-21K steps (please see detailed CTC chart)	
		182-182	5600K	
		226-226	6500K	
		227-255	6621K-10.000K linear in 120-121K steps (please see detailed CTC chart)	
15	**Color Macro Halo** (override RGB/CTC)		**Please use color macros from ROXX® color macro chart**	
16	**Color Macro Crossfade Halo** (Transition Time between Color Macros)	000 - 005	No function	
		006-105	0,1s - 10s (0,1s steps)	
		106-214	11s - 119s (1s steps)	
		215-244	2m - 4m50s (10s steps)	
		245-255	5m - 15m (1m steps)	
17	**Effect Pattern Halo** (colors are still selectable by channel 11-15)	000 - 005	no Effect Pattern	
		006-017	Effect Pattern 1	
		018-29	Effect Pattern 2	
		030-041	Effect Pattern 3	
		042-054	Effect Pattern 4	
		055-067	Effect Pattern 5	

17	**Effect Pattern Halo** (colors are still selectable by channel 11-15)	068-079	Effect Pattern 6
		080-091	Effect Pattern 7
		092-103	Effect Pattern 8
		104-115	Effect Pattern 9
		116-127	Effect Pattern 10
		128-139	Effect Pattern 11
		140-151	Effect Pattern 12
		152-163	Effect Pattern 13
		164-175	Effect Pattern 14
		176-187	Effect Pattern 15
		188-199	Effect Pattern 16
		200-211	Effect Pattern 17
		212-223	Effect Pattern 18
		224-235	Effect Pattern 19
		236-255	Effect Pattern 20
18	**Effect Pattern Speed**	000 - 005	Effect Speed - Pattern stops
		006-125	Efect Speed Clockwise - fast ⊖ slow
		126-127	Effect Speed - Pattern stops
		128-255	Efect Speed Counter Clockwise slow ⊖ fast
19	**Effect Pattern Transition** (Transition between Effect Patterns)	000 - 255	0s - 5s
20	**Dimmer Backlight Halo**	000-255	0 - 100%
21	**Shutter Backlight Halo**	000 - 019	No function
		020 - 024	Shutter open
		025 - 064	Strobe 1 (fast ⊖ slow)
		065 - 069	Shutter open
		070 - 084	Strobe 2: opening pulse (fast ⊖ slow)
		085 - 089	Shutter open
		090 - 104	Strobe 3: closing pulse (fast ⊖ slow)
		105 - 109	Shutter open
		110 - 124	Strobe 4: random strobe (fast ⊖ slow)
		125 - 129	Shutter open
		130 - 144	Strobe 5: random opening pulse (fast ⊖ slow)
		145 - 149	Shutter open
		150 - 164	Strobe 6:random closing pulse (fast ⊖ slow)
		165 - 169	Shutter open
		170 - 184	Strobe 7: burst pulse (fast ⊖ slow)
		185 - 189	Shutter open
		190 - 204	Strobe 8: random burst pulse (fast ⊖ slow)
		205 - 209	Shutter open
		210 - 224	Strobe 9:sine wave (fast ⊖ slow)

21	**Shutter Backlight Halo**	225 - 229	Shutter open	
		230 - 244	Strobe 10: burst (fast ⊖ slow)	
		245 - 255	Shutter open	
22	**Red Backlight Halo**	000-255	0 - 100%	
23	**Green Backlight Halo**	000-255	0 - 100%	
24	**Blue Backlight Halo**	000-255	0 - 100%	
25	**CTC Backlight Halo** (affects RGB)	000 - 004	5600K	according to CTC chart
		005-226	2000K-6500K linear in 20-21K steps (please see detailed CTC chart)	
		182-182	5600K	
		226-226	6500K	
		227-255	6621K-10.000K linear in 120-121K steps (please see detailed CTC chart)	
26	**Color Macro Backlight Halo** (override RGB)		Please use color macros from ROXX® color macro chart	
27	**Color Macro Crossfade Backlight Halo** (Transition Time between Color Macros)	000 - 005	No function	
		006-105	0,1s - 10s (0,1s steps)	
		106-214	11s - 119s (1s steps)	
		215-244	2m - 4m50s (10s steps)	
		245-255	5m - 15m (1m steps)	
28	**Device Settings** (please see remark *1)	000-029	No function	
		030-034	Battery Runtime Off (hold 3s)	
		035-039	Battery Runtime 8 hours (hold 3s)	
		040-044	Battery Runtime 12 hours (hold 3s)	
		045-049	Battery Runtime 16 hours (hold 3s)	
		050-054	Battery Runtime 20 hours (hold 3s)	
		055-059	Battery Runtime 24 hours (hold 3s)	
		060-064	No function	
		065-069	Display Backlight On (hold 3s)	
		070-074	Display Backlight Off (hold 3s)	
		075-079	No function	
		080-084	DMX Fail - Blackout (hold 3s)	
		085-089	DMX Fail - Hold (hold 3s)	
		090-094	DMX Fail - Emergency Light (hold 3s)	
		095-099	No function	
		100-104	AC Fail - Hold (hold 3s)	
		105-109	AC Fail - Blackout (hold 3s)	
		110-114	AC Fail - Emergency Light (hold 3s)	
		115-119	No function	
		120-124	Linear Dimmer Curve (hold 3s)	
		125-129	Exponential Dimmer Curve (hold 3s)	
		130-134	Logarithmic Dimmer Curve (hold 3s)	
		135-139	S-Curve Dimmer Curve (hold 3s)	
		140-144	No function	

28	**Device Settings** (please see remark *1)	145-149	Dimmer Response LED (Hold 1,5s)
		150-154	Dimmer Response Halogen (Hold 1,5s)
		155-159	No function
		160-164	LED Frequency 800Hz (hold 3s)
		165-169	LED Frequency 1200Hz (hold 3s)
		170-174	LED Frequency 2000Hz (hold 3s)
		175-179	LED Frequency 3600Hz (hold 3s)
		180-184	LED Frequency 12kHz (hold 3s)
		185-189	LED Frequency 25kHz (hold 3s)
		190-194	No function
		195-199	Full Calibration (Colors & CCT / Hold 3s)
		200-204	CCT Calibration (RAW Colors / Hold 3s)
		205-209	Factory Reset (hold 3s) - except User Reset defaults
		210-214	User Reset (hold 3s)
		215-255	No function

80 CH PIXEL MODE - Color Calibrated			
Ch.	**Function**	**Value**	**Setting**
1	**Dimmer Center**	000-255	0 - 100%
2	**Shutter Center**	000 - 019	No function
		020 - 024	Shutter open
		025 - 064	Strobe 1 (fast ⊖ slow)
		065 - 069	Shutter open
		070 - 084	Strobe 2: opening pulse (fast ⊖ slow)
		085 - 089	Shutter open
		090 - 104	Strobe 3: closing pulse (fast ⊖ slow)
		105 - 109	Shutter open
		110 - 124	Strobe 4: random strobe (fast ⊖ slow)
		125 - 129	Shutter open
		130 - 144	Strobe 5: random opening pulse (fast ⊖ slow)
		145 - 149	Shutter open
		150 - 164	Strobe 6:random closing pulse (fast ⊖ slow)
		165 - 169	Shutter open
		170 - 184	Strobe 7: burst pulse (fast ⊖ slow)
		185 - 189	Shutter open
		190 - 204	Strobe 8: random burst pulse (fast ⊖ slow)
		205 - 209	Shutter open
		210 - 224	Strobe 9:sine wave (fast ⊖ slow)
		225 - 229	Shutter open
		230 - 244	Strobe 10: burst (fast ⊖ slow)
		245 - 255	Shutter open
3	**Red Center**	000-255	0 - 100%

4	**Green Center**	000-255	0 - 100%
5	**Blue Center**	000-255	0 - 100%
6	**Dimmer Halo**	000-255	0 - 100%
7	**Shutter Halo**	000 - 019	No function
		020 - 024	Shutter open
		025 - 064	Strobe 1 (fast ⊖ slow)
		065 - 069	Shutter open
		070 - 084	Strobe 2: opening pulse (fast ⊖ slow)
		085 - 089	Shutter open
		090 - 104	Strobe 3: closing pulse (fast ⊖ slow)
		105 - 109	Shutter open
		110 - 124	Strobe 4: random strobe (fast ⊖ slow)
		125 - 129	Shutter open
		130 - 144	Strobe 5: random opening pulse (fast ⊖ slow)
		145 - 149	Shutter open
		150 - 164	Strobe 6:random closing pulse (fast ⊖ slow)
		165 - 169	Shutter open
		170 - 184	Strobe 7: burst pulse (fast ⊖ slow)
		185 - 189	Shutter open
		190 - 204	Strobe 8: random burst pulse (fast ⊖ slow)
		205 - 209	Shutter open
		210 - 224	Strobe 9:sine wave (fast ⊖ slow)
		225 - 229	Shutter open
		230 - 244	Strobe 10: burst (fast ⊖ slow)
		245 - 255	Shutter open
8	**Pixel 01 Red**	000-255	0 - 100%
9	**Pixel 01 Green**	000-255	0 - 100%
10	**Pixel 01 Blue**	000-255	0 - 100%
11	**Pixel 02 Red**	000-255	0 - 100%
12	**Pixel 02 Green**	000-255	0 - 100%
13	**Pixel 02 Blue**	000-255	0 - 100%
	....Pixel 02-23		
77	**Pixel 24 Red**	000-255	0 - 100%
78	**Pixel 24 Green**	000-255	0 - 100%
79	**Pixel 24 Blue**	000-255	0 - 100%
80	**Device Settings** (please see remark *1)	000-029	No function
		030-034	Battery Runtime Off (hold 3s)
		035-039	Battery Runtime 8 hours (hold 3s)
		040-044	Battery Runtime 12 hours (hold 3s)
		045-049	Battery Runtime 16 hours (hold 3s)
		050-054	Battery Runtime 20 hours (hold 3s)
		055-059	Battery Runtime 24 hours (hold 3s)
		060-064	No function

80	**Device Settings** (please see remark *1)	065-069	Display Backlight On (hold 3s)
		070-074	Display Backlight Off (hold 3s)
		075-079	No function
		080-084	DMX Fail - Blackout (hold 3s)
		085-089	DMX Fail - Hold (hold 3s)
		090-094	DMX Fail - Emergency Light (hold 3s)
		095-099	No function
		100-104	AC Fail - Hold (hold 3s)
		105-109	AC Fail - Blackout (hold 3s)
		110-114	AC Fail - Emergency Light (hold 3s)
		115-119	No function
		120-124	Linear Dimmer Curve (hold 3s)
		125-129	Exponential Dimmer Curve (hold 3s)
		130-134	Logarithmic Dimmer Curve (hold 3s)
		135-139	S-Curve Dimmer Curve (hold 3s)
		140-144	No function
		145-149	Dimmer Response LED (Hold 1,5s)
		150-154	Dimmer Response Halogen (Hold 1,5s)
		155-159	No function
		160-164	LED Frequency 800Hz (hold 3s)
		165-169	LED Frequency 1200Hz (hold 3s)
		170-174	LED Frequency 2000Hz (hold 3s)
		175-179	LED Frequency 3600Hz (hold 3s)
		180-184	LED Frequency 12kHz (hold 3s)
		185-189	LED Frequency 25kHz (hold 3s)
		190-194	No function
		195-199	Full Calibration (Colors & CCT / Hold 3s)
		200-204	CCT Calibration (RAW Colors / Hold 3s)
		205-209	Factory Reset (hold 3s) - except User Reset defaults
		210-214	User Reset (hold 3s)
		215-255	No function

7 CH DIRECT MODE (RAW)

Ch.	Function	Value	Setting
1	**Red (Center)**	000-255	0 - 100%
2	**Green (Center)**	000-255	0 - 100%
3	**Blue (Center)**	000-255	0 - 100%
4	**Lime (Center)**	000-255	0 - 100%

5	**Red (Halo)**	000-255	0 - 100%
6	**Green (Halo)**	000-255	0 - 100%
7	**Blue (Halo)**	000-255	0 - 100%

11 CH DIRECT MODE (RAW)			
Ch.	**Function**	**Value**	**Setting**
1	**Red (Center)**	000-255	0 - 100%
2	**Red Fine (Center)**	000-255	0 - 100%
3	**Green (Center)**	000-255	0 - 100%
4	**Green Fine (Center)**	000-255	0 - 100%
5	**Blue (Center)**	000-255	0 - 100%
6	**Blue Fine (Center)**	000-255	0 - 100%
7	**Lime (Center)**	000-255	0 - 100%
8	**Lime Fine (Center)**	000-255	0 - 100%
9	**Red (Halo)**	000-255	0 - 100%
10	**Green (Halo)**	000-255	0 - 100%
11	**Blue (Halo)**	000-255	0 - 100%

20 CH DIRECT MODE (RAW)			
Ch.	**Function**	**Value**	**Setting**
1	**Dimmer Center**	000-255	0 - 100%
2	**Shutter Center**	000 - 019	No function
		020 - 024	Shutter open
		025 - 064	Strobe 1 (fast ⊖ slow)
		065 - 069	Shutter open
		070 - 084	Strobe 2: opening pulse (fast ⊖ slow)
		085 - 089	Shutter open
		090 - 104	Strobe 3: closing pulse (fast ⊖ slow)
		105 - 109	Shutter open
		110 - 124	Strobe 4: random strobe (fast ⊖ slow)
		125 - 129	Shutter open
		130 - 144	Strobe 5: random opening pulse (fast ⊖ slow)
		145 - 149	Shutter open
		150 - 164	Strobe 6:random closing pulse (fast ⊖ slow)
		165 - 169	Shutter open
		170 - 184	Strobe 7: burst pulse (fast ⊖ slow)
		185 - 189	Shutter open
		190 - 204	Strobe 8: random burst pulse (fast ⊖ slow)
		205 - 209	Shutter open

2	**Shutter Center**	210 - 224	Strobe 9:sine wave (fast ⊖ slow)
		225 - 229	Shutter open
		230 - 244	Strobe 10: burst (fast ⊖ slow)
		245 - 255	Shutter open
3	**Red Center**	000-255	0 - 100%
4	**Green Center**	000-255	0 - 100%
5	**Blue Center**	000-255	0 - 100%
6	**Lime Center**	000-255	0 - 100%
7	**CTC Center** (affects RGB)	000 - 004	RAW (according to CTC chart)
		005-226	2000K-6500K linear in 20-21K steps (please see detailed CTC chart)
		182-182	5600K
		226-226	6500K
		227-255	6621K-10.000K linear in 120-121K steps (please see detailed CTC chart)
8	**Color Macro Center** (override RGB/CTC)		**Please use color macros from ROXX® color macro chart**
9	**Color Macro Crossfade Center** (Transition Time between Color Macros)	000 - 005	No function
		006-105	0,1s - 10s (0,1s steps)
		106-214	11s - 119s (1s steps)
		215-244	2m - 4m50s (10s steps)
		245-255	5m - 15m (1m steps)
10	**Dimmer Halo**	000-255	0 - 100%
11	**Shutter Halo**	000 - 019	No function
		020 - 024	Shutter open
		025 - 064	Strobe 1 (fast ⊖ slow)
		065 - 069	Shutter open
		070 - 084	Strobe 2: opening pulse (fast ⊖ slow)
		085 - 089	Shutter open
		090 - 104	Strobe 3: closing pulse (fast ⊖ slow)
		105 - 109	Shutter open
		110 - 124	Strobe 4: random strobe (fast ⊖ slow)
		125 - 129	Shutter open
		130 - 144	Strobe 5: random opening pulse (fast ⊖ slow)
		145 - 149	Shutter open
		150 - 164	Strobe 6:random closing pulse (fast ⊖ slow)
		165 - 169	Shutter open
		170 - 184	Strobe 7: burst pulse (fast ⊖ slow)
		185 - 189	Shutter open
		190 - 204	Strobe 8: random burst pulse (fast ⊖ slow)
		205 - 209	Shutter open
		210 - 224	Strobe 9:sine wave (fast ⊖ slow)
		225 - 229	Shutter open
		230 - 244	Strobe 10: burst (fast ⊖ slow)
		245 - 255	Shutter open

12	**Red Halo**	000-255	0 - 100%	
13	**Green Halo**	000-255	0 - 100%	
14	**Blue Halo**	000-255	0 - 100%	
15	**CTC Halo** (affects RGB)	000 - 004	RAW	according to CTC chart
		005-226	2000K-6500K linear in 20-21K steps (please see detailed CTC chart)	
		182-182	5600K	
		226-226	6500K	
		227-255	6621K-10.000K linear in 120-121K steps (please see detailed CTC chart)	
16	**Color Macro Halo** (override RGB/CTC)		**Please use color macros from ROXX® color macro chart**	
17	**Color Macro Crossfade Halo** (Transition Time between Color Macros)	000 - 005	No function	
		006-105	0,1s - 10s (0,1s steps)	
		106-214	11s - 119s (1s steps)	
		215-244	2m - 4m50s (10s steps)	
		245-255	5m - 15m (1m steps)	
18	**Auto Programs** (override Center + Halo Shutter, RGB, CTC, Color Macro) **Dimmer Center + Dimmer Halo still controllable**	000 - 005	no function - Stop Program	
		006-011	Center - 7 Color Fade	
		012-017	Center - 7 Color Jump	
		018-023	Center - 15 Color Jump	
		024-029	Center - 15 Color Jump	
		030-035	Center - Police RB	
		036-041	Center - Police B	
		042-047	Center - Candle Light	
		048-053	Center - Fireworks	
		054-059	Center - Red Carpet	
		060-065	Center - Welding	
		066-071	Halo - 7 Color Fade (all)	
		072-077	Halo - 7 Color Jump (all)	
		078-083	Halo - 15 Color Fade (all)	
		084-089	Halo - 15 Color Jump (all)	
		090-095	Halo - 7 Color Chase / Fade	
		096-101	Halo - 7 Color Chase / Jump	
		102-107	Halo - 15 Color Chase / Fade	
		108-113	Halo - 15 Color Chase / Jump	
		114-119	Halo - Rainbow	
		120-125	Halo - Random Pixel Strobe / 10.000K	
		126-131	Halo - Pixel Strobe / Random Color	
		132-137	Halo - Candle Light	
		138-143	Halo - Fire	
		144-149	Halo - Ice	
		150-155	Halo - Fireworks	
		156-161	Halo - Red Carpet	

18	**Auto Programs** (override Center + Halo Shutter, RGB, CTC, Color Macro) **Dimmer Center + Dimmer Halo still controllable**	162-167	Halo - Weldingt
		168-173	Center & Halo - 7 Color Fade / Uniform
		174-179	Center & Halo - 7 Color Fade / Offset
		180-185	Center & Halo - 7 Color Fade / Rainbow
		186-191	Center & Halo - 7 Color Jump / Uniform
		192-197	Center & Halo - 7 Color Jump / Offset
		198-203	Center & Halo - 15 Color Fade / Uniform
		204-209	Center & Halo - 15 Color Fade / Offset
		210-215	Center & Halo - 15 Color Fade / Rainbow
		216-221	Center & Halo - 15 Color Jump / Uniform
		222-227	Center & Halo - 15 Color Jump / Offset
		228-233	Center & Halo - Fireworks
		234-239	Center & Halo - Red Carpet
		240-245	Center & Halo - Welding
		246-255	no function
19	**Auto Program Speed**	000 - 005	no function - Auto Porgram Speed Stop
		006 - 126	Auto Program fast to slow - Forward (clockwise)
		127 - 127	Stop
		128 - 255	Auto Program slow to fast - Backward (counter-clockwise)
20	**Device Settings** (please see remark *1)	000-029	No function
		030-034	Battery Runtime Off (hold 3s)
		035-039	Battery Runtime 8 hours (hold 3s)
		040-044	Battery Runtime 12 hours (hold 3s)
		045-049	Battery Runtime 16 hours (hold 3s)
		050-054	Battery Runtime 20 hours (hold 3s)
		055-059	Battery Runtime 24 hours (hold 3s)
		060-064	No function
		065-069	Display Backlight On (hold 3s)
		070-074	Display Backlight Off (hold 3s)
		075-079	No function
		080-084	DMX Fail - Blackout (hold 3s)
		085-089	DMX Fail - Hold (hold 3s)
		090-094	DMX Fail - Emergency Light (hold 3s)
		095-099	No function
		100-104	AC Fail - Hold (hold 3s)
		105-109	AC Fail - Blackout (hold 3s)
		110-114	AC Fail - Emergency Light (hold 3s)
		115-119	No function
		120-124	Linear Dimmer Curve (hold 3s)

20	**Device Settings** (please see remark *1)	125-129	Exponential Dimmer Curve (hold 3s)
		130-134	Logarithmic Dimmer Curve (hold 3s)
		135-139	S-Curve Dimmer Curve (hold 3s)
		140-144	No function
		145-149	Dimmer Response LED (Hold 1,5s)
		150-154	Dimmer Response Halogen (Hold 1,5s)
		155-159	No function
		160-164	LED Frequency 800Hz (hold 3s)
		165-169	LED Frequency 1200Hz (hold 3s)
		170-174	LED Frequency 2000Hz (hold 3s)
		175-179	LED Frequency 3600Hz (hold 3s)
		180-184	LED Frequency 12kHz (hold 3s)
		185-189	LED Frequency 25kHz (hold 3s)
		190-194	No function
		195-199	RAW (Hold 3s)
		200-204	User Calibration (Hold 3s)
		205-209	Factory Reset (hold 3s) - except User Reset defaults
		210-214	User Reset (hold 3s)
		215-255	No function

23 CH DIRECT MODE (RAW)			
Ch.	**Function**	**Value**	**Setting**
1	**Dimmer Center**	000-255	0 - 100%
2	**Dimmer Fine**	000-255	0 - 100%
3	**Shutter Center**	000 - 019	No function
		020 - 024	Shutter open
		025 - 064	Strobe 1 (fast ⊖ slow)
		065 - 069	Shutter open
		070 - 084	Strobe 2: opening pulse (fast ⊖ slow)
		085 - 089	Shutter open
		090 - 104	Strobe 3: closing pulse (fast ⊖ slow)
		105 - 109	Shutter open
		110 - 124	Strobe 4: random strobe (fast ⊖ slow)
		125 - 129	Shutter open
		130 - 144	Strobe 5: random opening pulse (fast ⊖ slow)
		145 - 149	Shutter open
		150 - 164	Strobe 6:random closing pulse (fast ⊖ slow)
		165 - 169	Shutter open
		170 - 184	Strobe 7: burst pulse (fast ⊖ slow)
		185 - 189	Shutter open

	Shutter Center	190 - 204	Strobe 8: random burst pulse (fast ⊖ slow)	
		205 - 209	Shutter open	
		210 - 224	Strobe 9:sine wave (fast ⊖ slow)	
		225 - 229	Shutter open	
		230 - 244	Strobe 10: burst (fast ⊖ slow)	
		245 - 255	Shutter open	
4	**Red (Center)**	000-255	0 - 100%	
5	**Red Fine (Center)**	000-255	0 - 100%	
6	**Green (Center)**	000-255	0 - 100%	
7	**Green Fine (Center)**	000-255	0 - 100%	
8	**Blue (Center)**	000-255	0 - 100%	
9	**Blue Fine (Center)**	000-255	0 - 100%	
10	**Lime (Center)**	000-255	0 - 100%	
11	**Lime Fine (Center)**	000-255	0 - 100%	
12	**CTC Center** (affects RGB)	000 - 004	RAW	according to CTC chart
		005-226	2000K-6500K linear in 20-21K steps (please see detailed CTC chart)	
		182-182	5600K	
		226-226	6500K	
		227-255	6621K-10.000K linear in 120-121K steps (please see detailed CTC chart)	
13	**Color Macro Center** (override RGB/CTC)		**Please use color macros from ROXX® color macro chart**	
14	**Color Macro Crossfade Center** (Transition Time between Color Macros)	000 - 005	No function	
		006-105	0,1s - 10s (0,1s steps)	
		106-214	11s - 119s (1s steps)	
		215-244	2m - 4m50s (10s steps)	
		245-255	5m - 15m (1m steps)	
15	**Dimmer Halo**	000-255	0 - 100%	
16	**Shutter Halo**	000 - 019	No function	
		020 - 024	Shutter open	
		025 - 064	Strobe 1 (fast ⊖ slow)	
		065 - 069	Shutter open	
		070 - 084	Strobe 2: opening pulse (fast ⊖ slow)	
		085 - 089	Shutter open	
		090 - 104	Strobe 3: closing pulse (fast ⊖ slow)	
		105 - 109	Shutter open	
		110 - 124	Strobe 4: random strobe (fast ⊖ slow)	
		125 - 129	Shutter open	
		130 - 144	Strobe 5: random opening pulse (fast ⊖ slow)	
		145 - 149	Shutter open	
		150 - 164	Strobe 6:random closing pulse (fast ⊖ slow)	
		165 - 169	Shutter open	
		170 - 184	Strobe 7: burst pulse (fast ⊖ slow)	
		185 - 189	Shutter open	

16	**Shutter Halo**	190 - 204	Strobe 8: random burst pulse (fast ⊖ slow)	
		205 - 209	Shutter open	
		210 - 224	Strobe 9:sine wave (fast ⊖ slow)	
		225 - 229	Shutter open	
		230 - 244	Strobe 10: burst (fast ⊖ slow)	
		245 - 255	Shutter open	
17	**Red (Halo)**	000-255	0 - 100%	
18	**Green (Halo)**	000-255	0 - 100%	
19	**Blue (Halo)**	000-255	0 - 100%	
20	**CTC Halo** (affects RGB)	000 - 004	RAW	according to CTC chart
		005-226	2000K-6500K linear in 20-21K steps (please see detailed CTC chart)	
		182-182	5600K	
		226-226	6500K	
		227-255	6621K-10.000K linear in 120-121K steps (please see detailed CTC chart)	
21	**Color Macro Halo** (override RGB/CTC)		**Please use color macros from ROXX® color macro chart**	
22	**Color Macro Crossfade Halo** (Transition Time between Color Macros)	000 - 005	No function	
		006-105	0,1s - 10s (0,1s steps)	
		106-214	11s - 119s (1s steps)	
		215-244	2m - 4m50s (10s steps)	
		245-255	5m - 15m (1m steps)	
23	**Device Settings** (please see remark *1)	000-029	No function	
		030-034	Battery Runtime Off (hold 3s)	
		035-039	Battery Runtime 8 hours (hold 3s)	
		040-044	Battery Runtime 12 hours (hold 3s)	
		045-049	Battery Runtime 16 hours (hold 3s)	
		050-054	Battery Runtime 20 hours (hold 3s)	
		055-059	Battery Runtime 24 hours (hold 3s)	
		060-064	No function	
		065-069	Display Backlight On (hold 3s)	
		070-074	Display Backlight Off (hold 3s)	
		075-079	No function	
		080-084	DMX Fail - Blackout (hold 3s)	
		085-089	DMX Fail - Hold (hold 3s)	
		090-094	DMX Fail - Emergency Light (hold 3s)	
		095-099	No function	
		100-104	AC Fail - Hold (hold 3s)	
		105-109	AC Fail - Blackout (hold 3s)	
		110-114	AC Fail - Emergency Light (hold 3s)	
		115-119	No function	
		120-124	Linear Dimmer Curve (hold 3s)	
		125-129	Exponential Dimmer Curve (hold 3s)	
		130-134	Logarithmic Dimmer Curve (hold 3s)	

23	**Device Settings** (please see remark *1)	135-139	S-Curve Dimmer Curve (hold 3s)
		140-144	No function
		145-149	Dimmer Response LED (Hold 1,5s)
		150-154	Dimmer Response Halogen (Hold 1,5s)
		155-159	No function
		160-164	LED Frequency 800Hz (hold 3s)
		165-169	LED Frequency 1200Hz (hold 3s)
		170-174	LED Frequency 2000Hz (hold 3s)
		175-179	LED Frequency 3600Hz (hold 3s)
		180-184	LED Frequency 12kHz (hold 3s)
		185-189	LED Frequency 25kHz (hold 3s)
		190-194	No function
		195-199	RAW (Hold 3s)
		200-204	User Calibration (Hold 3s)
		205-209	Factory Reset (hold 3s) - except User Reset defaults
		210-214	User Reset (hold 3s)
		215-255	No function

29 CH PATTERN MODE (RAW)			
Ch.	**Function**	**Value**	**Setting**
1	**Dimmer Center**	000-255	0 - 100%
2	**Shutter Center**	000 - 019	No function
		020 - 024	Shutter open
		025 - 064	Strobe 1 (fast ⊖ slow)
		065 - 069	Shutter open
		070 - 084	Strobe 2: opening pulse (fast ⊖ slow)
		085 - 089	Shutter open
		090 - 104	Strobe 3: closing pulse (fast ⊖ slow)
		105 - 109	Shutter open
		110 - 124	Strobe 4: random strobe (fast ⊖ slow)
		125 - 129	Shutter open
		130 - 144	Strobe 5: random opening pulse (fast ⊖ slow)
		145 - 149	Shutter open
		150 - 164	Strobe 6:random closing pulse (fast ⊖ slow)
		165 - 169	Shutter open
		170 - 184	Strobe 7: burst pulse (fast ⊖ slow)
		185 - 189	Shutter open
		190 - 204	Strobe 8: random burst pulse (fast ⊖ slow)
		205 - 209	Shutter open
2	**Shutter Center**	210 - 224	Strobe 9:sine wave (fast ⊖ slow)
		225 - 229	Shutter open
		230 - 244	Strobe 10: burst (fast ⊖ slow)
		245 - 255	Shutter open

3	**Red Center**	000-255	0 - 100%	
4	**Green Center**	000-255	0 - 100%	
5	**Blue Center**	000-255	0 - 100%	
6	**Lime Center**	000-255	0 - 100%	
7	**CTC Center** (affects RGB)	000 - 004	RAW	according to CTC chart
		005-226	2000K-6500K linear in 20-21K steps (please see detailed CTC chart)	
		182-182	5600K	
		226-226	6500K	
		227-255	6621K-10.000K linear in 120-121K steps (please see detailed CTC chart)	
8	**Color Macro Center** (override RGB/CTC)		**Please use color macros from ROXX® color macro chart**	
9	**Color Macro Crossfade Center** (Transition Time between Color Macros)	000 - 005	No function	
		006-105	0,1s - 10s (0,1s steps)	
		106-214	11s - 119s (1s steps)	
		215-244	2m - 4m50s (10s steps)	
		245-255	5m - 15m (1m steps)	
10	**Dimmer Halo**	000-255	0 - 100%	
11	**Shutter Halo**	000 - 019	No function	
		020 - 024	Shutter open	
		025 - 064	Strobe 1 (fast ⊖ slow))	
		065 - 069	Shutter open	
		070 - 084	Strobe 2: opening pulse (fast ⊖ slow)	
		085 - 089	Shutter open	
		090 - 104	Strobe 3: closing pulse (fast ⊖ slow)	
		105 - 109	Shutter open	
		110 - 124	Strobe 4: random strobe (fast ⊖ slow)	
		125 - 129	Shutter open	
		130 - 144	Strobe 5: random opening pulse (fast ⊖ slow)	
		145 - 149	Shutter open	
		150 - 164	Strobe 6:random closing pulse (fast ⊖ slow)	
		165 - 169	Shutter open	
		170 - 184	Strobe 7: burst pulse (fast ⊖ slow)	
		185 - 189	Shutter open	
		190 - 204	Strobe 8: random burst pulse (fast ⊖ slow)	
		205 - 209	Shutter open	
11	**Shutter Halo**	210 - 224	Strobe 9:sine wave (fast ⊖ slow)	
		225 - 229	Shutter open	
		230 - 244	Strobe 10: burst (fast ⊖ slow)	
		245 - 255	Shutter open	
12	**Red Halo**	000-255	0 - 100%	
13	**Green Halo**	000-255	0 - 100%	
14	**Blue Halo**	000-255	0 - 100%	

15	**CTC Halo** (affects RGB)	000 - 004	RAW	according to CTC chart
		005-226	2000K-6500K linear in 20-21K steps (please see detailed CTC chart)	
		182-182	5600K	
		226-226	6500K	
		227-255	6621K-10.000K linear in 120-121K steps (please see detailed CTC chart)	
16	**Color Macro Halo** (override RGB/CTC)		**Please use color macros from ROXX® color macro chart**	
17	**Color Macro Crossfade Halo** (Transition Time between Color Macros)	000 - 005	No function	
		006-105	0,1s - 10s (0,1s steps)	
		106-214	11s - 119s (1s steps)	
		215-244	2m - 4m50s (10s steps)	
		245-255	5m - 15m (1m steps)	
18	**Effect Pattern Halo** (colors are still selectable by channel 12-16)	000 - 005	No Effect Pattern	
		006-017	Effect Pattern 1	
		018-29	Effect Pattern 2	
		030-041	Effect Pattern 3	
		042-054	Effect Pattern 4	
		055-067	Effect Pattern 5	
		068-079	Effect Pattern 6	
		080-091	Effect Pattern 7	
		092-103	Effect Pattern 8	
		104-115	Effect Pattern 9	
		116-127	Effect Pattern 10	
		128-139	Effect Pattern 11	
		140-151	Effect Pattern 12	
		152-163	Effect Pattern 13	
		164-175	Effect Pattern 14	
		176-187	Effect Pattern 15	
		188-199	Effect Pattern 16	
		200-211	Effect Pattern 17	
		212-223	Effect Pattern 18	
		224-235	Effect Pattern 19	
		236-255	Effect Pattern 20	
19	**Effect Pattern Speed**	000 - 005	Effect Speed - Pattern stops	
		006-125	Efect Speed Clockwise - fast ⊖ slow	
		126-127	Effect Speed - Pattern stops	
		128-255	Efect Speed Counter Clockwise slow ⊖ fast	
20	**Effect Pattern Transition** (Transition between Effect Patterns)	000 - 255	0s - 5s	
21	**Dimmer Backlight Halo**	000-255	0 - 100%	

22	**Shutter Backlight Halo**	000 - 019	No function	
		020 - 024	Shutter open	
		025 - 064	Strobe 1 (fast ⊖ slow)	
		065 - 069	Shutter open	
		070 - 084	Strobe 2: opening pulse (fast ⊖ slow)	
		085 - 089	Shutter open	
		090 - 104	Strobe 3: closing pulse (fast ⊖ slow)	
		105 - 109	Shutter open	
		110 - 124	Strobe 4: random strobe (fast ⊖ slow)	
		125 - 129	Shutter open	
		130 - 144	Strobe 5: random opening pulse (fast ⊖ slow)	
		145 - 149	Shutter open	
22	**Shutter Backlight Halo**	150 - 164	Strobe 6:random closing pulse (fast ⊖ slow)	
		165 - 169	Shutter open	
		170 - 184	Strobe 7: burst pulse (fast ⊖ slow)	
		185 - 189	Shutter open	
		190 - 204	Strobe 8: random burst pulse (fast ⊖ slow)	
		205 - 209	Shutter open	
		210 - 224	Strobe 9:sine wave (fast ⊖ slow)	
		225 - 229	Shutter open	
		230 - 244	Strobe 10: burst (fast ⊖ slow)	
		245 - 255	Shutter open	
23	**Red Backlight Halo**	000-255	0 - 100%	
24	**Green Backlight Halo**	000-255	0 - 100%	
25	**Blue Backlight Halo**	000-255	0 - 100%	
26	**CTC Backlight Halo** (affects RGB)	000 - 004	RAW	according to CTC chart
		005-226	2000K-6500K linear in 20-21K steps (please see detailed CTC chart)	
		182-182	5600K	
		226-226	6500K	
		227-255	6621K-10.000K linear in 120-121K steps (please see detailed CTC chart)	
27	**Color Macro Backlight Halo** (override RGB)		**Please use color macros from ROXX® color macro chart**	
28	**Color Macro Crossfade Backlight Halo** (Transition Time between Color Macros)	000 - 005	No function	
		006-105	0,1s - 10s (0,1s steps)	
		106-214	11s - 119s (1s steps)	
		215-244	2m - 4m50s (10s steps)	
		245-255	5m - 15m (1m steps)	

29	**Device Settings** (please see remark *1)	000-029	No function
		030-034	Battery Runtime Off (hold 3s)
		035-039	Battery Runtime 8 hours (hold 3s)
		040-044	Battery Runtime 12 hours (hold 3s)
		045-049	Battery Runtime 16 hours (hold 3s)
		050-054	Battery Runtime 20 hours (hold 3s)
		055-059	Battery Runtime 24 hours (hold 3s)
		060-064	No function
		065-069	Display Backlight On (hold 3s)
		070-074	Display Backlight Off (hold 3s)
		075-079	No function
		080-084	DMX Fail - Blackout (hold 3s)
		085-089	DMX Fail - Hold (hold 3s)
		090-094	DMX Fail - Emergency Light (hold 3s)
		095-099	No function
		100-104	AC Fail - Hold (hold 3s)
		105-109	AC Fail - Blackout (hold 3s)
		110-114	AC Fail - Emergency Light (hold 3s)
		115-119	No function
		120-124	Linear Dimmer Curve (hold 3s)
		125-129	Exponential Dimmer Curve (hold 3s)
		130-134	Logarithmic Dimmer Curve (hold 3s)
		135-139	S-Curve Dimmer Curve (hold 3s)
		140-144	No function
		145-149	Dimmer Response LED (Hold 1,5s)
		150-154	Dimmer Response Halogen (Hold 1,5s)
		155-159	No function
		160-164	LED Frequency 800Hz (hold 3s)
		165-169	LED Frequency 1200Hz (hold 3s)
		170-174	LED Frequency 2000Hz (hold 3s)
		175-179	LED Frequency 3600Hz (hold 3s)
		180-184	LED Frequency 12kHz (hold 3s)
		185-189	LED Frequency 25kHz (hold 3s)
		190-194	No function
29	**Device Settings** (please see	195-199	RAW (Hold 3s)
		remark *1)	User Calibration (Hold 3s)
		205-209	Factory Reset (hold 3s) - except User Reset defaults
		210-214	User Reset (hold 3s)
		215-255	No function
remark *1		**After the adjustments have been made, set the value to 000 to avoid disturbance by endless function call.**	

7.5 Color Macro Chart for DMX

Gels - Color Macros for DMX		
DMX value	Gel Name	Color Number
000-005	no function	
006-008	Red	100% Red LED
009-011	Fire	LEE 019
012-014	Medium Red	LEE 027
015-017	Primary Red	LEE 106
018-020	Med Amber	LEE 020
021-023	Dark Amber	LEE 022
024-026	Deep Amber	LEE 104
027-029	Orange	LEE 105
030-032	Deep Golden Amber	LEE 135
033-035	Yellow	LEE 101
036-038	Green	100% Green LED
039-041	Lime Green	LEE 088
042-044	Moss Green	LEE 089
045-047	LEE Green	LEE 121
048-050	Primary Green	LEE 139
051-053	Jas Green	LEE 738
054-056	Jade	LEE 323
057-059	Blue	100% Blue LED
060-062	Sky Blue	LEE 068
063-065	Tokyo Blue	LEE 071
066-068	Light Blue	LEE 118
069-071	Marine Blue	LEE 131
072-074	Med Blue	LEE 132
075-077	Congo Blue	LEE 181
078-080	Mikkel Blue	LEE 716
081-083	Rose Pink	LEE 002
084-086	Med Pink	LEE 036
087-089	Light Lavender	LEE 052
090-092	Lavender	LEE 058
093-095	Magenta	LEE 113
096-098	Mauve	LEE 126
099-101	Smokey Pink	LEE 127

Gels - Color Macros for DMX			
DMX value	Gel Name	Color Number	
102-104	Special Med Lavender	LEE 343	
105-107	Ultimate Violet	LEE 707	
108-110	Magical Magenta	LEE 795	
111-113	Chrysalis Pink	LEE 798	
114-116	Specia KH Lavender	LEE 799	
117-119	Bulb White	2700K	
120-122	Halogen White	3200K	
123-125	Neutral White	4200K	
126-128	Daylight White	5600K	
129-131	Cold White I	6000K	
132-134	Cold White II	6300K	
135-137	White (if not availble use no function)	100% White LED	
138-140	Amber (if not availble use no function)	100% Amber LED	
141-143	Lime (if not availble use no function)	100% Lime LED	
144-146	Cyan (if not availble use no function)	100% Cyan LED	
147-149	User Color 1	(if not availble use no function)	
150-152	User Color 2	(if not availble use no function)	
153-155	User Color 3	(if not availble use no function)	
156-158	User Color 4	(if not availble use no function)	
159-161	User Color 5	(if not availble use no function)	
162-164	Color Jumping stop		
165-209	Color Jumping speed slow ⊖ fast	color 1-37	**Center LED + Halo**
210-255	Color fading speed slow ⊖ fast	color 1-37	**Center LED + Halo**

7.5 Color Macro Chart for Stand Alone

Gels - Color Macros for Standalone Mode		
Position	Gel Name	Color Number
1	Red	100% Red LED
2	Fire	LEE 019
3	Medium Red	LEE 027
4	Primary Red	LEE 106
5	Med Amber	LEE 020
6	Dark Amber	LEE 022
7	Deep Amber	LEE 104
8	Orange	LEE 105
9	Deep Golden Amber	LEE 135
10	Yellow	LEE 101
11	Green	100% Green LED
12	Lime Green	LEE 088
13	Moss Green	LEE 089
14	LEE Green	LEE 121
15	Primary Green	LEE 139
16	Jas Green	LEE 738
17	Jade	LEE 323
18	Blue	100% Blue LED
19	Sky Blue	LEE 068
20	Tokyo Blue	LEE 071
21	Light Blue	LEE 118
22	Marine Blue	LEE 131
23	Med Blue	LEE 132
24	Congo Blue	LEE 181
25	Mikkel Blue	LEE 716
26	Rose Pink	LEE 002
27	Med Pink	LEE 036
28	Light Lavender	LEE 052

Gels - Color Macros for Standalone Mode		
Position	Gel Name	Color Number
29	Lavender	LEE 058
30	Magenta	LEE 113
31	Mauve	LEE 126
32	Smokey Pink	LEE 127
33	Special Med Lavender	LEE 343
34	Ultimate Violet	LEE 707
35	Magical Magenta	LEE 795
36	Chrysalis Pink	LEE 798
37	Specia KH Lavender	LEE 799
38	Bulb White	2700K
39	Halogen White	3200K
40	Neutral White	4200K
41	Daylight White	5600K
42	Cold White I	6000K
43	Cold White II	6300K
44	Amber (only if available)	100% Amber LED
45	Lime (only if available)	100% Lime LED
46	Cyan (only if available)	100% Cyan LED

7.5 CTC channel

DMX / Color temperature

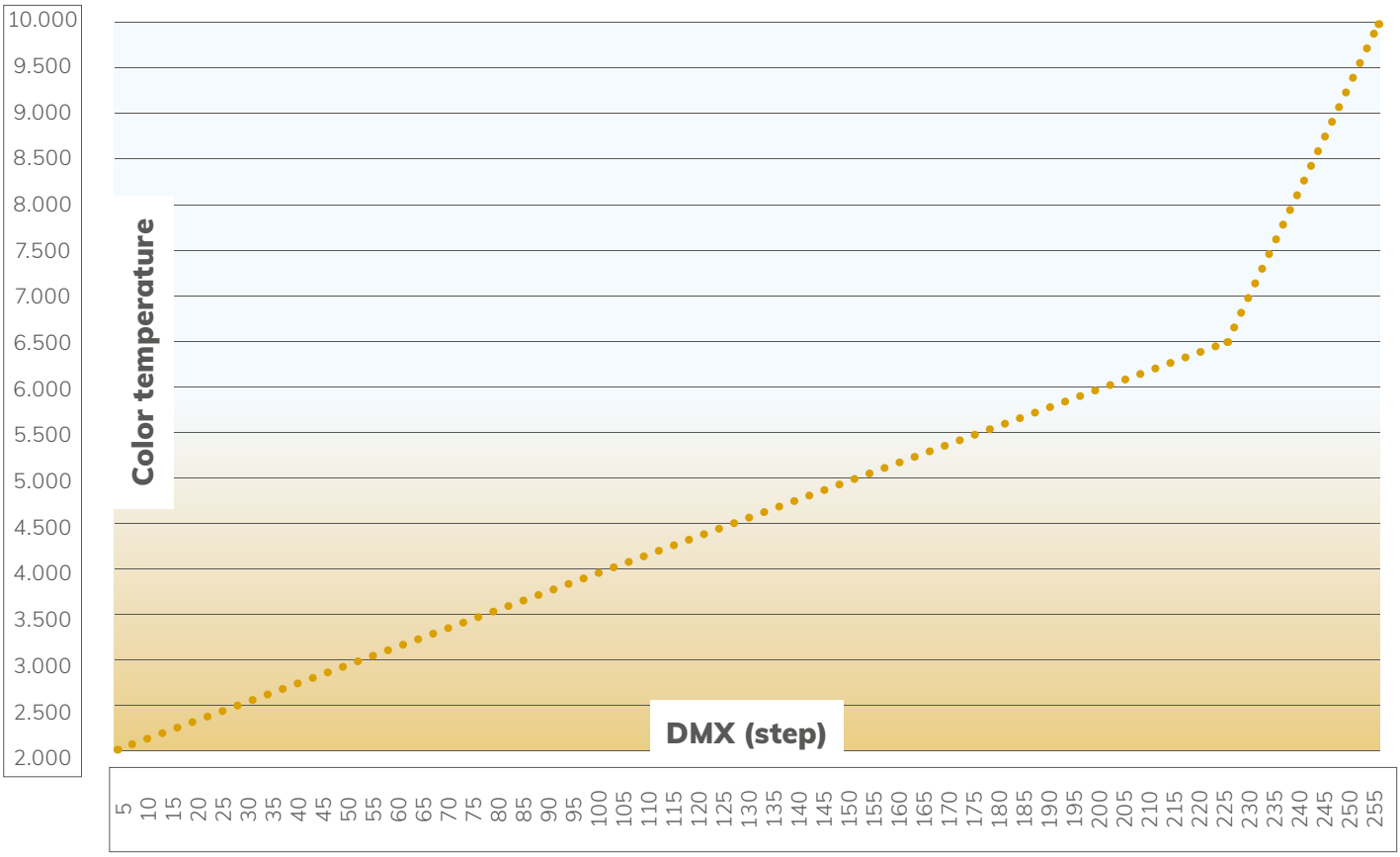

7.5 CTC-Chart

DMX (Step)	Color Temp (°K)
0	5600
1	5600
2	5600
3	5600
4	5600
5	2000
6	2020
7	2041
8	2061
9	2081
10	2102
11	2122
12	2143
13	2163
14	2183
15	2204
16	2224
17	2244
18	2265
19	2285
20	2305
21	2326
22	2346
23	2367
24	2387
25	2407
26	2428
27	2448
28	2468
29	2489
30	2509
31	2529
32	2550
33	2570
34	2590
35	2611
36	2631
37	2652
38	2672
39	2692
40	2713
41	2733
42	2753

DMX (Step)	Color Temp (°K)
43	2774
44	2794
45	2814
46	2835
47	2855
48	2876
49	2896
50	2916
51	2937
52	2957
53	2977
54	2998
55	3018
56	3038
57	3059
58	3079
59	3100
60	3120
61	3140
62	3161
63	3181
64	3201
65	3222
66	3242
67	3262
68	3283
69	3303
70	3324
71	3344
72	3364
73	3385
74	3405
75	3425
76	3446
77	3466
78	3486
79	3507
80	3527
81	3548
82	3568
83	3588
84	3609
85	3629

DMX (Step)	Color Temp (°K)
86	3649
87	3670
88	3690
89	3710
90	3731
91	3751
92	3771
93	3792
94	3812
95	3833
96	3853
97	3873
98	3894
99	3914
100	3934
101	3955
102	3975
103	3995
104	4016
105	4036
106	4057
107	4077
108	4097
109	4118
110	4138
111	4158
112	4179
113	4199
114	4219
115	4240
116	4260
117	4281
118	4301
119	4301
120	4342
121	4362
122	4382
123	4403
124	4423
125	4443
126	4464
127	4484
128	4505

DMX (Step)	Color Temp (°K)
129	4525
130	4545
131	4566
132	4586
133	4606
134	4627
135	4647
136	4667
137	4688
138	4708
139	4729
140	4749
141	4769
142	4790
143	4810
144	4830
145	4851
146	4871
147	4891
148	4912
149	4932
150	4952
151	4973
152	4993
153	5014
154	5034
155	5054
156	5075
157	5095
158	5115
159	5136
160	5156
161	5176
162	5197
163	5217
164	5238
165	5258
166	5278
167	5299
168	5319
169	5339
170	5360
171	5380

DMX (Step)	Color Temp (°K)
172	5400
173	5421
174	5441
175	5462
176	5482
177	5502
178	5523
179	5543
180	5563
181	5584
182	5604
183	5624
184	5645
185	5665
186	5686
187	5706
188	5726
189	5747
190	5767
191	5787
192	5808
193	5828
194	5848
195	5869
196	5889
197	5910
198	5930
199	5950
200	5971
201	5991
202	6011
203	6032
204	6052
205	6072
206	6093
207	6113
208	6133
209	6154
210	6174
211	6195
212	6215
213	6235
214	6256

DMX (Step)	Color Temp (°K)
215	6276
216	6296
217	6317
218	6337
219	6357
220	6378
221	6398
222	6419
223	6439
224	6459
225	6480
226	6500
227	6621
228	6741
229	6862
230	6983
231	7103
232	7224
233	7345
234	7466
235	7586
236	7707
237	7828
238	7948
239	8069
240	8190
241	8310
242	8431
243	8552
244	8672
245	8793
246	8914
247	9034
248	9155
249	9276
250	9397
251	9517
252	9638
253	9759
254	9879
255	10000

7.6 RDM Templates*

The ROXX Show series features support for various RDM functions.
RDM (Remote Device Management) is a protocol enhancement to USITT DMX512 that allows bi-directional communication between the fixtures and the controller over a standard DMX line. This protocol will allow configuration, status monitoring and management.
You will need a RDM controller to get control over the supported parameters. See the tables below for supported RDM features.

Label:	ROXX E.FLEX A.FLEX
Model:	E.FLEX A.FLEX
Manufacturer:	ROXX
ID: E.FLEX	0X6a6a0128xxxx
ID: A.FLEX	0X6a6a0129xxxx
Device ID (E.FLEX / A.FLEX):	0128xxxxxxxxx / 0129xxxxxxxxx

ⓘ ***Note: During RDM identifying process E.FLEX /A.FLEX flashes white to blue color alternately.**

RDM functions E.FLEX

For easy identifying ROXX E.FLEX during RDM process the unit will jump from white color to blue color every second.

PID	Function	Action	Values
0x00F0	DMX Start Adress	Set	001-512
0x00E0	DMX Personality	Set	14x DMX modes
0x00E1	DMX Slots	read	n.a.
0x8018	CRMX Operating Mode	Set (Receive / Transmit)	0= RX / 1= TX
0x8019	CRMX Receive Reset	Yes/No	0= No / 1= Yes
0x801A	CRMX Transmit Link	Yes/No	0= No / 1= Yes
0x801B	CRMX Pass to DMX out	Yes/No	0= No / 1= Yes
0x801C	Bluetooth	On/Off	0= Off / 1= On
0x801D	Bluetooth Link	Yes/No	0= No / 1= Yes
0x8045	Runtime	Set	0= Off / 1= 4h / 2= 6h / 3= 8h / 4= 10h / 5= 12h / 6= 14h / 7=16h / 8=18h / 9=20h / 10= 22h / 11= 24h
0x8046	Charging	Set	0= Continous / 1= Storage
0x8012	Display Backlight	Set	0= Off / 1= On
0x8041	Startup Mode	Set	0= DMX / 1= AUTO / 2= Editor / 3= Color Macro / 4= Quick Color / 5= Tunable White / 6=User Color
0x8011	DMX Fail	Set	1= Hold / 2= Blackout / 3= Emergency
0x8044	AC Fail	Set	1= Hold / 2= Blackout / 3= Emergency
0x8030	Dimmer Curve	Set	1= Linear / 2= Exponential / 3= Logarithmic / 4= S-Curve
0x8031	Dimmer Response	Set	1= LED / 2= Halogen
0x8033	Color Calibration	Set	0=Full Calibration / 1=CCT Calibration
0x8034	RAW Balance	Set	0= RAW / 1= User Calibration
0x8035	User Calibration- Red	Set	
0x8036	User Calibration- Green	Set	
0x8037	User Calibration- Blue	Set	
0x8038	User Calibration- Lime	Set	
0x8040	LED Frequency (PWM)	Set	1= 800Hz / 2= 1200Hz / 3= 2000Hz / 4= 3600Hz / 5= 12kHz / 6= 25kHz

0x801E	Factory Reset	Yes/No	0= No / 1= Yes
0x801F	User Reset	Yes/No	0= No / 1= Yes
Sensor 2	Voltage	read	n.a.
0x0401	Lamp hours	read	n.a.
0x0400	Device hours	read	n.a.
none	Software Version	read	n.a.
Sensor 1	LED Temperature	read	n.a.

RDM functions - A.FLEX

For easy identifying ROXX A.FLEX during RDM process the unit will jump from white color to blue color every second.

PID	Function	Action	Values
0x00F0	DMX Start Adress	Set	001-512
0x00E0	DMX Personality	Set	14x DMX modes
0x00E1	DMX Slots	read	n.a.
0x8018	CRMX Operating Mode	Set (Receive / Transmit)	0= RX / 1= TX
0x8019	CRMX Receive Reset	Yes/No	0= No / 1= Yes
0x801A	CRMX Transmit Link	Yes/No	0= No / 1= Yes
0x801B	CRMX Pass to DMX out	Yes/No	0= No / 1= Yes
0x801C	Bluetooth	On/Off	0= Off / 1= On
0x801D	Bluetooth Link	Yes/No	0= No / 1= Yes
0x8045	Runtime	Set	0= Off / 1= 4h / 2= 6h / 3= 8h / 4= 10h / 5= 12h / 6= 14h / 7=16h / 8=18h / 9=20h / 10= 22h / 11= 24h
0x8046	Charging	Set	0= Continous / 1= Storage
0x8012	Display Backlight	Set	0= Off / 1= On
0x8041	Startup Mode	Set	0= DMX / 1= AUTO / 2= Color Macro / 3= Quick Color / 4= Tunable White / 5=User Color
0x8011	DMX Fail	Set	1= Hold / 2= Blackout / 3= Emergency
0x8044	AC Fail	Set	1= Hold / 2= Blackout / 3= Emergency
0x8030	Dimmer Curve	Set	1= Linear / 2= Exponential / 3= Logarithmic / 4= S-Curve
0x8031	Dimmer Response	Set	1= LED / 2= Halogen
0x8033	Color Calibration	Set	0=CCT Calibration / 1= Full Calibration
0x8034	RAW Balance	Set	0= RAW / 1= User Calibration
0x8035	User Calibration- Red	Set	
0x8036	User Calibration- Green	Set	
0x8037	User Calibration- Blue	Set	
0x8038	User Calibration- Lime	Set	
0x8040	LED Frequency (PWM)	Set	1= 800Hz / 2= 1200Hz / 3= 2000Hz / 4= 3600Hz / 5= 12kHz / 6= 25kHz
0x801E	Factory Reset	Yes/No	0= No / 1= Yes
0x801F	User Reset	Yes/No	0= No / 1= Yes
Sensor 2	Voltage	read	n.a.
0x0401	Lamp hours	read	n.a.
0x0400	Device hours	read	n.a.
none	Software Version	read	n.a.
Sensor 1	LED Temperature	read	n.a.

Sensors

RDM enables various readouts for remote device monitoring. See the table below for sensors and sensor types. Please note: The RDM controller communicates with the fixtures to show only the available sensors for this fixture. The table is subject to change without notice.

Name	
Temperature	xx°C / xxx°F
Software Version	SW-Version
Errors	

7.7 Firmware Update

To update E.FLEX / A.FLEX to newest firmware, please use ROXX update box and make sure the fixtures are connected to DC power.

Please download update instructions here:
https://roxxlight.com/support/

8. TROUBLESHOOTING

Did you try turning the device off and on again?

Problem	Reason	Solution
Device is not responding.	No power.	Check cable connections and conform that power is switched on.
	Fuse defect.	Contact your qualified service technician / manufacturer.
Device has turned off.	Power failure or power was turned off.	Check power supply, fuse, connections, switches.
Device has stopped responding.	DMX cable correct?	Check cables.
	Wireless connection got cut off.	Check wireless transmitter and connection signals.
Device operates strangely.	DMX cable inverted (pins correct?)	Use a phase inverter or different cables.
	DMX cable terminated?	If not, install DMX termination at the end of the cable.
	Stand Alone program running?	Stop internal Stand Alone.
No Bluetooth Connectivity	No Bluetooth Connectivity	Please make sure your mobile device is inside the connectivity range of maximum 10-15m.
	Bluetooth is disabled at your mobile device	Please eanble Bluetooth at your mobile device settings.
	Mobile device has wrong Bluetooth Pin	Please use same Bluetooth Pin to connect ROXX. APP with the fixture. Current BLE Pin can be read out inside fixture´s wireless DMX settings.
	Mobile device has different Bluetooth connectivity	As only one Bluetooth connectiviy can be active, please make sure your mobile device is currently not connected to some other devices.
	Different mobile device is still conneced to the fixture	Please disconnect other mobile device from fixture.
	No Bluetooth Advertisment	Please send new BLE advertisement by enable "BLE Link" inside Settings of the fixture.
	Bluetooth module has hang up	Please enable Factory Reset at the fixture to re-start the Bluetooth module.

9. MANUFACTURER´S DECLARATION

Manufacturer´s Warranty & Limitations of Liability

Please find our warranty conditions and limitations of liability inside our manufacturer´s declaration at www.roxxlight.com/support

Requesting Warranty-Service

To request warranty service for your product, please contact:
ROXX GmbH,
Hansestr. 91, 51149 Köln
Email: info@roxxlight.com or the ROXX authorized reseller in your country, from where you purchased your product.

Correct Disposal of this product

This is for the European Union and European countries with electrical waste collection systems. When this label is shown on the product or brochure it means that the item cannot be disposed with household waste. In order to prevent damage to the environment or human health please do not dispose this product uncontrolled. Make sure to act responsible, recycle this product separately from other types of waste to enable lasting reuse of resources. Private users please contact the retailer where you purchased this product or your local authorities to find out where and how proper recycling of this item is possible. Business users please contact your supplier or check the terms and conditions of your purchasing contract. Make sure not to mix this product with other commercial waste.

FCC Statement

This device complies with Part 15 of the FCC Rules. Operation is subject to the following two conditions:
(1) This device may not cause harmful interference, and
(2) This device must accept any interference received, including interference that may cause undesired operation

NOTE: This equipment has been tested and found to comply with the limits for a Class B digital device, pursuant to Part 15 of the FCC Rules. These limits are designed to provide reasonable protection against harmful interference in a residential installation. This equipment generates, uses and can radiate radio frequency energy and, if not installed and used in accordance with the instructions, may cause harmful interference to radio communications. However, there is no guarantee that interference will not occur in a particular installation. If this equipment does cause harmful interference to radio or television reception, which can be determined by turning the equipment off and on, the user is encouraged to try to correct the interference by one or more of the following measures:

- Reorient or relocate the receiving antenna.
- Increase the separation between the equipment and receiver.
- Connect the equipment into an outlet on a circuit different from that to which the receiver is connected.
- Consult the dealer or an experienced radio/TV technician for help.

CE Compliance

The equipment marketed by ROXX GmbH complies (where applicable) with the essential requirements and other specifications of the following Directives:

- 2014/53/EU (RED)
- 2014/30/EU (EMC)
- 2014/35/EU (LVD)
- 2011/65/EU (RoHS)

The complete EU- and UK-Declaration of Conformity can be found at www.roxxlight.com/support, or you can also request it at info@roxxlight.com

ROXX GmbH | Hansestr. 91 | 51149 Köln | www.roxxlight.com
Tel: +49 (0) 2203 20371-0 | Fax: +49 (0) 2203 20371-20