User Manual

ROXX®

ROXX NEO mini

USER MANUAL

CONTENT

1. Safety Informations

1.1. General Preventive Measures 4
1.2. Regulations for equipment that connects to power mains 5
1.3. Technical warnsigns and explanation 6

2. Introduction

2.1. About us 7
2.2. NEO mini 7

3. General Product Information

3.1. Scope of delivery 8
3.2. Control Functions 8
3.3. Features 8

4. Installation & Setup

4.1 Physical Installation and Rigging 9
4.2 Connections 10
4.2.1. AC Power 10
4.2.2. DMX Connection 11
4.2.2.1. Cable Connection 11
4.2.2.2. Wireless Connection 12
4.3 NFC (Near Field Communication) 13

5. Operation

5.1 Start up 14
5.2 Control Display 14
5.3 Display Short Cuts 14
5.4 Configuration 16
5.4.1 Set DMX Start Address (Direct Access) 16
5.4.2 Selecting DMX Mode 16
5.4.3 Stand Alone 17
5.4.5 Settings 24
5.4.5.1 Reset functions 28
5.4.6 System Info 26

6. Accessories

6.1. Magnetic Filters 30
6.2. More accessories 30

7. Technical Data / Diagrams

7.1 Technical drawings and measurements 31
7.2 IP Rating 32
7.3 Technical Data 33
7.4 Section Chart / DMX-Charts / Color Macro Charts / CTC Chart 35
7.5 RDM Templates 54

8. Troubleshooting 55

9. Manufacturer´s Declaration 56

1. SAFETY INFORMATION

1.1. General Preventive Measures

1.1.1. Please read, understand and follow the instructions.

1.1.2. Store the instructions and information in a safe place.
Best solution is the ring binder provided by ROXX.

1.1.3. Follow all safety warnings. Under no circumstances remove safety warnings or other information from the equipment.

1.1.4. Don't use the equipment for any other intended purpose or manner.

1.1.5. Use only stable and compatible stands and/or brackets. Especially when fix installed.
Make sure the wall brackets are properly installed and safe. Make sure the device is securely installed and cannot fall.

1.1.6. Check the safety regulations applying for your country before and during installation.

1.1.7. Keep the device away from heat! Don't place/install near heaters, ovens or any source of heat.
Make sure that the device always is efficiently cooled and cannot overheat.

1.1.8. Always guarantee that ventilation and cooling slots are clean and not blocked.

1.1.9. Item must be away minimum 20cm from anything around and above it.

1.1.10. Do not use this device close to water.

1.1.11. Do not expose this equipment to flammable materials.

1.1.12. Make sure that no objects can fall into the device.

1.1.13. Only use this device with the accessories recommended by the manufacturer.

1.1.14. Always check the equipment for housing damages, so that no water can enter the device.
No containers containing liquids of any kind should be place on top of the unit.

1.1.15. Opening or modifying this device is only allowed by authorized and qualified persons.

1.1.16. All cables need to be checked after connecting the device in order to prevent damage or accidents.

1.1.17. Make sure that the device is transported safe and packed proper in order to prevent damage of any kind.

1.1.18. Once you notice improper function of your device due to damage, electric shock or anything similar, immediately unplug the unit from the mains outlet and contact our service department.

1.1.19. Clean the device with a dry cloth.

1.1.20. Observe all disposal laws applicable in your country. Especially for the packaging.

1.1.21. Plastic bags are not a toy! Keep away from children!

1.1.22. Please note that changes or modifications which are not approved by the party responsible for compliance will void the user's authority to operate the device.

1.2 Regulations for equipment that connects to power mains

1.2.1. If an earthing contact is available in the used power cord, it must used in combination with an power outlet, providing a protective ground. In no circustances should the protective ground be deactivated.

1.2.2. Do not switch on the device immediately after it has been in strong different temperatures, especially after transport. Let the device acclimatize to the temparature in the room of usage first to prevent moisture and condensation.

1.2.3. Verify that the correct voltage and frequency are available in the area of operation, before connecting the unit to the mains outlet.

1.2.4. If the plug doesn‘t fit in your mains outlet, contact your electrician.

1.2.5. Make sure your power cord/adapter/connector does not show signs of kinks/warps or is being stepped on.

1.2.6. Allwas disconnect the unit when not in use or being cleaned. Don‘t pull on the cord to disconnect. Only touch power connections with dry hands!

1.2.7. Don‘t switch the unit on/off rapidly. This may cause damage.

1.2.8. If a fuse needs to be replaced, ALWAYS make sure that exact the same fuse will be used (type and rating). Repeatedly blown fuses need to be checked by an authorised service technician.

1.2.9. In the risk of lighting strike all units need to be unpluged from the mains in order to prevent damage.

1.2.10. During installation there must be a voltage free condition.

1.2.11. The device needs to be cleaned and serviced regularly and will credit this with a longer life cycle. Dust, dirt, moist, water, smoke, nicotine or anything similar inside the unit will cause damage/malfunction.

1.2.12. The unit needs to have at least 0,5m distance to anything flammable.

1.2.13. You have to make sure that any electrical installation applys to the laws of your country. Correct power cables and applying standards have to be used.

1.3. Technical warnsigns and explanation

In order to prevent the risk of an electric shock, under no circumstances remove the cover/back or open the unit in any way! No user serviceable parts are inside. Service, maintenance and repairs should only be done by qualified service personnel or the manufacturer.

Dangerous uninsulated voltage inside the device can cause an electrical shock when opened by unqualified personnel.

Important operating and maintenance instructions apply!

Do not operate this device in tropical climates.

CAUTION! Intense LED light source! Risk of eye damage. Do not look into the light source

The housing surface of the spotlight can heat up to temperatures as high as 70 °C in regular use. Ensure that it is not possible to come into contact with the housing unintentionally. Always allow sufficient time for the lamp to cool down before dismantling, carrying out maintenance work or charging etc..

IMPORTANT IMFORMATION!

- This is a product which has been developed for professional usage in event technology. It is not suitable as a houshold lighting.
- NEVER stare, not even temporarily, directly into the light source.
- Don‘t use magnifiers or any other optical instrument to look at the beam.
- The effects of this device, expecially the stroboscope effect, can cause problems for sensitive people or may even cause epileptical seizures.

2. INTRODUCTION

2.1. About us

The name ROXX® came easily.
Combined with the concentrated knowledge and many years of experience, our three founders, who have been leaving their mark in the event and lighting industry for many years already, came together in 2020 to start this outstanding venture.
Product development, sales and marketing as well as the exceptional know-how and the profound rooting in the field of the professional lighting technology belong to our core competences and therefore guarantee extremely innovative and reliable products, excellent support and professional service in every aspect.

Designed & developed in Germany
ROXX® products are developed and designed in Germany. Always in tight consultation with our customers and experts who will eventually be working with these tools. This ensures innovative, easy-to-use and performance-oriented solutions, which provide added value for our customers.

Made to last
Recommended for permanent outdoor use, most ROXX® products feature additional corrosion protection and enhanced IP66 equipment protection, thereby providing that crucial extra for a wider range of applications. In addition to architectural or theme park applications, even fixed installations in coastal or offshore areas with high salt exposure can be reliably implemented over long periods of time.

2.2. NEO mini

Illuminate your world with NEO mini, a cutting-edge lighting fixture that combines unparalleled performance with versatility and convenience. With 10 x 60W RGBL LEDs, NEO mini generates an astounding 16.590lx @ 5m, calibrated at 5600K, ensuring your space is bathed in brilliant light. Crafted with precision, the fixture features a specially developed 9° TIR lens, ensuring high illuminance even over extended distances while guaranteeing seamless color mixing for captivating displays. Enhance your lighting setup further with optional magnetic filters, offering a range of circular and elliptical beam angles, along with a smoked clear filter tailored for impeccable camera applications.
NEO mini boasts a CRI/Ra and TLCI higher 85, ensuring accurate color reproduction that breathes life into your surroundings. Built to withstand the elements, NEO mini has a certified IP65 rating, making it suitable for both indoor and outdoor use.
The integrated CRMX transceiver and Bluetooth module offer seamless wireless DMX setup according to industry standards, along with direct control via the intuitive ROXX.APP, streamlining your workflow and enhancing efficiency.
Experience hassle-free addressing and configuration with NEO mini's integrated Near Field Communication (NFC), even when fixture power is not available. This innovative feature revolutionizes your daily work processes, making light setup faster, easier, and more satisfying than ever before. The specially developed copper heat pipe cooling system ensures stable luminous intensity, even in high ambient temperatures. With temperature-controlled fan modes, including fan-off mode for silent operation, NEO mini is ideal for any stage, TV, and film application. The fixture offers linear CTC control from 2000K to 10,000K, ensuring versatility for any lighting scenario. The user-friendly 2” TFT display, complemented by backlighted buttons, provides direct access to dimmer, CCT, gels, app control, and CRMX functions, simplifying operation for users of all levels.
Designed with convenience in mind, NEO mini features integrated handles on both the head and yoke, allowing for comfortable transportation. Multiple mounting locations offer creative rigging options, while 16-bit dimming control ensures smooth, perfect fades for seamless transitions. Experience seamless transitions with 16-bit dimming control, ensuring smooth, perfect fades every time. Plus, adjustable PWM frequencies up to 25kHz guarantee flicker-free operation, providing optimal lighting conditions for any shoot.

3. GENERAL PRODUCT INFORMATION

3.1. Scope of delivery

- 1x NEO mini
- Power cord with plug (EU country specific, if not ordered differently)

We´re offering a wide range of professional accessories (optional). Please see under chapter 6 or at our website www.roxxlight.com

3.2. Control Functions

- 3CH CCT, 3CH RGB, 6CH RGB, 8CH RGB, 11CH RGB, 15CH RGB, 4CH DIRECT, 8CH DIRECT, 9CH DIRECT, 12CH DIRECT, 17CH DIRECT, 10CH HSI
- Stand Alone Functions including cinema effects, various auto programs, customisable scenes, CCT, LEE adjusted color macros and custom color templates
- 6 extra display controls for direct access of wireless settings, dimmer, CCT, color & user definable functions
- Master & Slave (by DMX and Wireless DMX)
- Wireless DMX (Lumenradio CRMX®)
- ROXX App - Bluetooth 5.0
- ROXX NFC App - Near Field Communication

3.3. Features

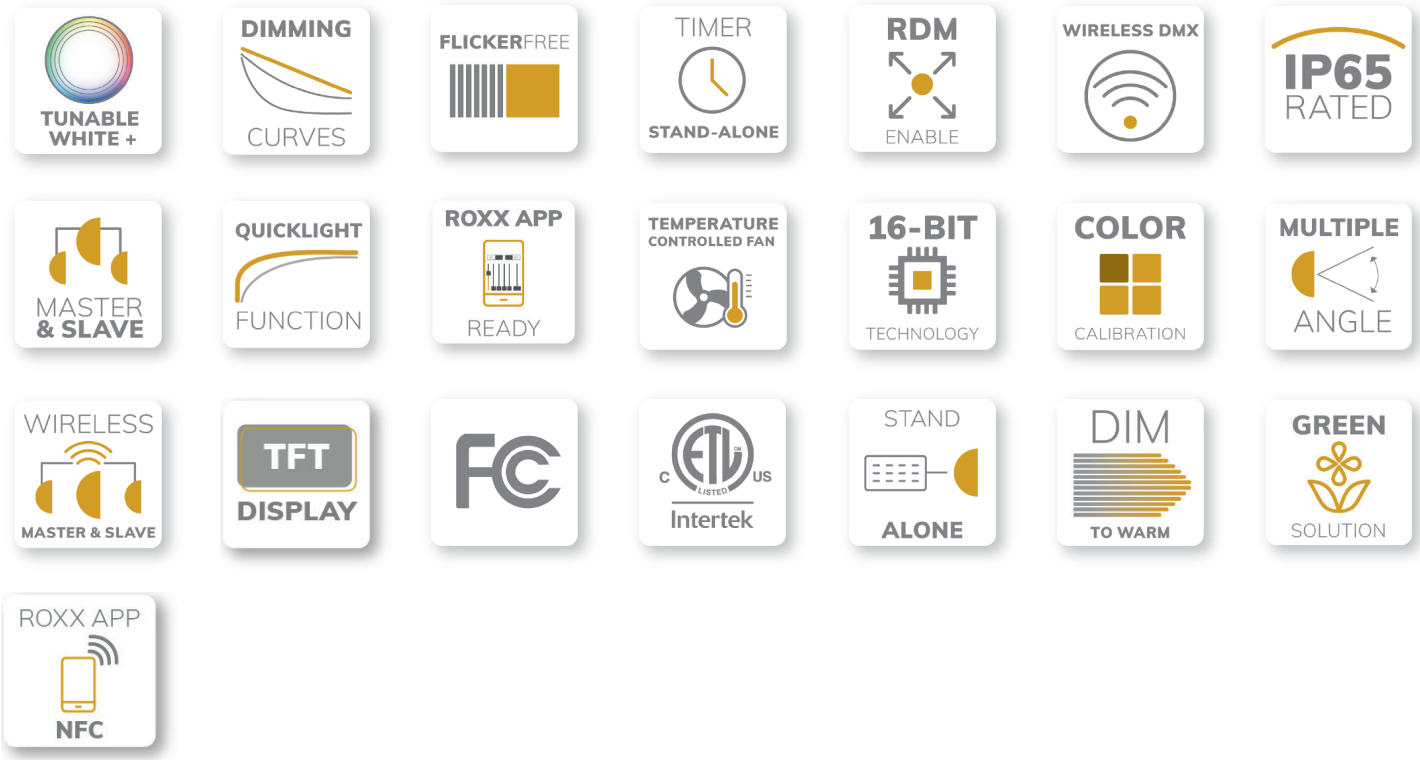

4. INSTALLATION & SETUP

4.1 Physical Installation and Rigging

ROXX NEO mini may be installed in any orientation. For this purpose the product provides several options:

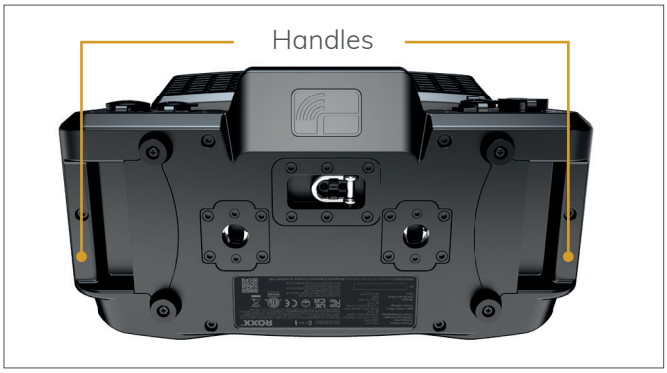

Standing:

The fixture is equipped with 4 rubber feet. It allows the luminaire to be used in floor application. With its integrated rubber feet it´s designed to ensure a secure stand on every plane surface with 220° tilt movement of the fixtures head.

Hanging:

On the bottom 2x Camlock 1/4 turn connnectors are installed. Here it´s possible to click in the ROXX Omega Bracket ST (optional accessory) equiped with any suitable clamp.

Omega Bracket ST

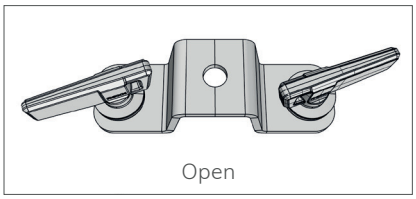
Open

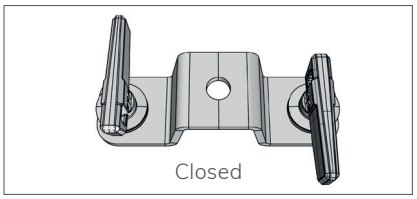
Closed

Insert the two fasteners and turn each 90° clockwise to lock them. Please be sure that the fasterners are turned fully and snaped in.

Use a safety wire matching the local official regulations. We recommend using the safety eye on the bottom of the fixture.

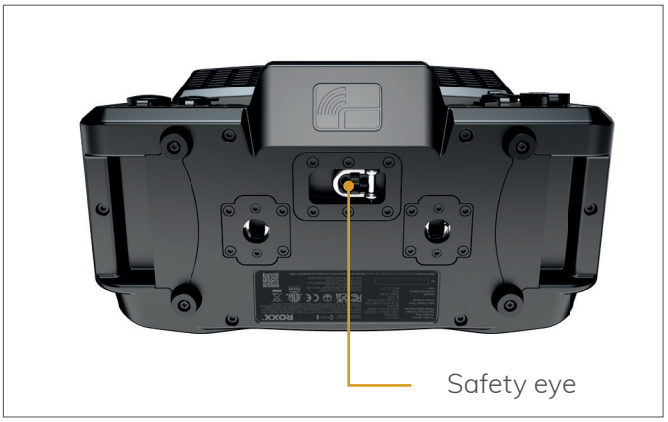

4.2 Connections*

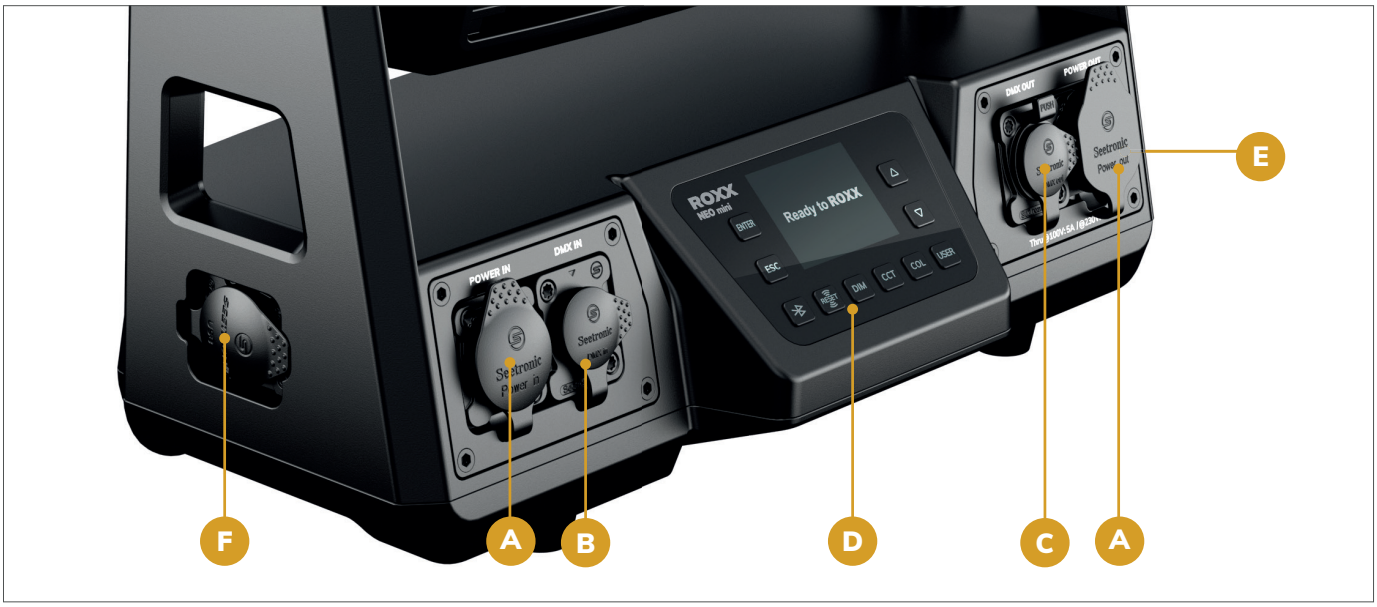

A: IP65 Power I/O connectors with rubber sealing cap.
Connect using the provided power cable (when not in use, always close with rubber sealing cap)
B: DMX IN
C: DMX OUT
D: Direct Acces to Dimmer, CCT, Gels, Wireless, Connectivity, User definable controls
E: Goretex Valve
F: Firmware / USB: when not in use, always close with rubber sealing cap

ⓘ ***Note:**
In order to provide protection from spraying water, in accordance with protection class IP65, special IP65-rated XLR connectors must be used correctly with the DMX input and output sockets, or they must be closed using the rubber sealing caps. When connected correctly, or when sealed correctly with the rubber sealing caps, the POWER IN and POWER OUT sockets are protected from spraying water, as in accordance with IP65.

4.2.1. AC Power

The NEO mini operates on any 100–260 V, 50/60 Hz AC mains power supply with a maximum power consumption of 674W. Connect the fixture to AC power using the supplied cable or a similar one with Neutrik powerCON TRUE1 NAC3FX-W or a compatible type, to ensure the correct ingress protection (IP).
For temporary installations, the mains cable must be fitted with a grounded connector intended for exterior use. The fixture must be grounded/earthed and be able to be isolated from AC power. The AC power supply must incorporate a fuse or circuit breaker for fault protection.

Wire Color (EU models)	Wire Color (US models)	Conductor	Symbol
Brown	Black	Live	L
Blue	White	Neutral	N
Yellow / Green	Green	Ground (earth)	⏚ or ⏚

Warning!

Read “Safety Informations” starting on page 3 before connecting the fixtures to AC mains power!
Do not connect the fixture to an electrical dimmer system, as doing so may cause damage that is not covered by the product warranty!

4.2.2 DMX Connection

The NEO mini is fully controllable by DMX (USITT DMX512-A standard, based on RS-485) and RDM. It can be connected using either DMX cables or via the built-in LumenRadio CRMX wireless system.

4.2.2.1. Cable Connection

If using a cabled DMX system, connect the DMX IN cable to the input connector (male 5-pin XLR connector) and DMX OUT cable to the output (female 5-pin XLR connectors).

For outdoor installations, use only IP65-rated XLR connectors.
Use shielded twisted pair cable designed for RS-485 devices. The cables are daisy chained between the fixtures, and up to 32 fixtures can be connected to the same DMX link. Up to 300 meters (1000ft.) of cable is achievable with high quality DMX cables. All DMX links must be terminated in the last fixture by connecting a DMX termination plug to the last fixture's 5 pin DMX out connector.
Standard microphone cable is not suitable for transmitting DMX.

DMX Termination on last fixture DMX out

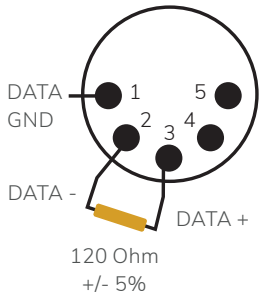

XLR pin out

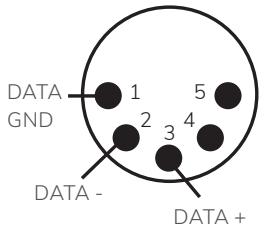

4.2.2.2. Wireless Connection*

NEO mini is equipped with a LumenRadio ™ Transceiver module.
This enables the fixture to work with the following connectivity options:
- Working in Receiver Mode: receive wireless DMX- and RDM Signals via CRMX
- Working in Transmitter Mode: transmit DMX (1 universe) to other units via CRMX
- Full Control via Bluetooth 5.0 and ROXX App

The Fixture is able to send DMX-data received by CRMX or Bluetooth to its physical DMX-Output XLR Connector and hereafter, plugged in by cable, to any DMX-capable unit. For this please enable "Pass to DMX Out" inside Wireless DMX Settings.

NEO mini can act as a fully operative CRMX Receiver and be paired to an active wireless transmitter (CRMX) simultanously as being connected to a cabled DMX. The device will prioritize cabled DMX input over wireless DMX and over Bluetooth. A small indicator infront of "DMX", "CRMX" or "BLE" gives an easy overview which protocol is curently active. Please see the display graphics below.

If using a wireless DMX system, ensure that the DMX input and the DMX output are properly sealed. Connect both DMX IN and DMX OUT, or seal, in order to maintain the fixture's IP65 rating.

ⓘ ***Note: If you are using XLR for DMX and not Bluetooth we recommend to not connect to Bluetooth unless you need to since it can cause a few dropped DMX packets.**
BLE and CRMX RX are not available simoultaNEO miniusly.

- **If CRMX RX is enabled and BLE will enabled after, CRMX automatically changes to TX mode.**
- **If CRMX TX operating mode is changed to RX, BLE will be disabled automatically.**

4.2.2.2. Wireless Connection

CRMX	Disabled	The indicator infront of "DMX" shows that DMX is active.
Operation Mode	n.a.	
Linked	No	
Receive Reset	No	
DMX	**Enabled**	
BLE (Bluetooth)	Disabled	

CRMX	**Enabled**	The indicator infront of "CRMX (RX)" shows that the fixture is now working in wireless DMX receive mode. "(RX)"= CRMX operating mode is set to receive
Operation Mode	**RX**	
Linked	**No**	
Receive Reset	Yes	
DMX	Disconnect	
BLE (Bluetooth)	Disabled	

CRMX	**Enabled**	The indicator infront of "CRMX (TX)" shows that the fixture is now working in wireless DMX transmit mode. "(TX)"= CRMX operating mode is set to transmit
Operation Mode	**TX**	
Linked	**No**	
Receive Reset	Yes	
DMX	Disconnect	
BLE (Bluetooth)	Disabled	

CRMX	**Enabled**	Once the fixture is linked to an external transmitter, the CRMX signal-symbole appears on upper left side. 1 dash= 1-30% signal strength 2 dashs= 31-70% signal strength 3 dashs= 71-100% signal strength
Operation Mode	**RX**	
Linked	**Yes**	
Receive Reset	Yes	
DMX	Disconnect	
BLE (Bluetooth)	Disabled	

CRMX	**Enabled**	Once the fixture is linked to an external transmitter, the CRMX signal-symbole appears on upper left side. 1 dash= 1-30% signal strength 2 dashs= 31-70% signal strength 3 dashs= 71-100% signal strength
Operation Mode	**TX**	
Linked	**Yes**	
Receive Reset	Yes	
DMX	Disconnect	
BLE (Bluetooth)	Disabled	

CRMX	**Enabled**	In case the external transmitter is switched off or out of signal range the signal-symbole starts to blink.
Operation Mode	**RX**	
Linked	**Yes, out of range**	
Receive Reset	Yes	
DMX	Disconnect	
BLE (Bluetooth)	Disabled	

CRMX	**Enabled**	An exclamation appears and blinks although the external transmitter is switched on and is inside the signal range but no DMX is connected to the external transmitter.
Operation Mode	**RX**	
Linked	**Yes, but no DMX**	
Receive Reset	Yes	
DMX	Disconnect	
BLE (Bluetooth)	Disabled	

4.2.3.2. Wireless Connection

CRMX	Disabled	The indicator infront of "BLE" shows that the fixture is now working in Bluetooth mode and is paired to ROXX App.
Operation Mode	n.a.	
Linked	No	
Receive Reset	No	
DMX	Disconnect	
BLE (Bluetooth)	**Enabled + Paired**	

CRMX	**Enabled**	The indicator infront of "BLE" shows that the fixture is now working in Bluetooth mode and is paired to ROXX App. As CRMX TX is enabeld and linked a full DMX universe is send out by CRMX (wireless DMX).
Operation Mode	**TX**	
Linked	**Yes**	
Receive Reset	No	
DMX	Disconnect	
BLE (Bluetooth)	**Enabled + Paired**	

CRMX	**Enabled**	No indicator infront of "BLE", fixture is not paired to ROXX App.
Operation Mode	**TX**	
Linked	**Yes**	
Receive Reset	No	
DMX	Disconnect	
BLE (Bluetooth)	**Enabled, not paired**	

CRMX	**Enabled**	DMX is active. As CRMX TX is enabled and linked a full DMX universe is send out by CRMX (wireless DMX).
Operation Mode	**TX**	
Linked	**Yes**	
Receive Reset	No	
DMX	**Connect**	
BLE (Bluetooth)	Enabled	

4.3. NFC (Near Field Communication)

NEO mini integrates a NFC chip (Near Field Communication) and allows in conjunction with ROXX NFC App to address and configure the fixtures wirelessly even when the fixture power is not prevent. Additionally, the fixtures firmware can be read out and updated to latest version. For this please make sure NEO mini stays AC powered during update process.
The NFC chip is based on it´s lower housing part, close to the CRMX antenna. To get a proper connection between your mobile phone and NEO mini, please make sure that your phone is very close to the NFC.

ROXX

Available on the App Store

GET IT ON Google Play

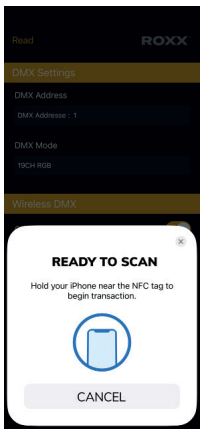

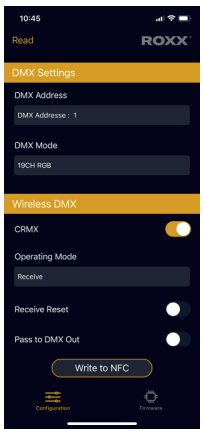

5. OPERATION

5.1 Start up*

Once the fixture is connected to AC power, the boot process starts and the following information will appear on the display:
“Ready to ROXX”, the product name and the current software version.

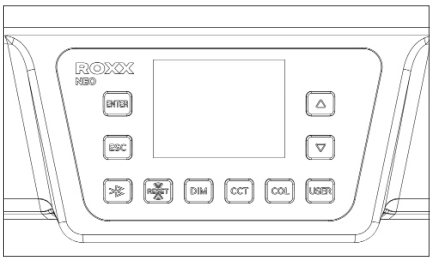

After this process, the fixture is ready for operation, and starts in the previously enabled mode.

ⓘ ***Note:**
During boot process the fan spins up quickly to blow out some possible dust from last use.

5.2 Control Display*

2.0" TFT Display with ten backlighted control buttons

ENTER **Press ENTER** to access the selection menu for system settings or confirm changes.

ESC **Press ESC** to take a step back in the menu.

△ ▽ **Press arrows to scroll up and down** inside the menu and change values, such as DMX address.

ⓘ ***Note:**
After approximately 1 minute of inactivity inside the menu settings, the display will automatically jump back to home screen.

5.3 Display Short Cuts*

Short Cuts
For some always recurring functions the fixture allows quick and user-friendly access at home screen over some display control short-cuts:

User Reset or Factory Reset*

ENTER ⊕ ESC

Pressing ESC+ENTER simultaneously a Factory Reset or User Reset can be started.
By using the up/down arrows the Factory- or User Reset can be selected.
For confirming press ENTER, to jump back please press ESC.

ⓘ ***Note:**
For detailed information about the different reset options please refer to chapter "5.4.6.1 Reset functions"

Display Off

Pressing ESC + arrow down simultaneously the display backlight function will set to off and the display will turn off immediately. Once a control is pressed the display backlight will turn on.

Manual display flip function*

The fixture includes an auto display flip function by default.
To use the manual display flip function please disable the auto flip function under Settings / Display first. Once the auto display flip function is disabled you can use the manual display flip function by pressing arrow up + arrow down simultaneously. The display will rotate 180 degrees. By pressing both arrows simultaneously again the display will flip back.

ⓘ ***Note:**
Once the display is flipped both Up / Down controls will work according to the display rotation.

5.4 Configuration

Home Screen

After boot process the fixture is ready for operation and starts in the previously enabled mode. At home screen the following information will appear, depending on the current operating mode:

A DMX Adress
B Operating Mode (DMX Mode, Quick Light or Standalone Mode)
C Next available DMX address depending on the fixtures DMX footprint
D External Data protocol (CRMX, DMX, BLE).
E CRMX status and strength
F The dot indicates the active protocol
Note:
CRMX (RX) CRMX Receiving Mode
CRMX (TX) CRMX Transmit Mode
BLE Bluetooth enabled

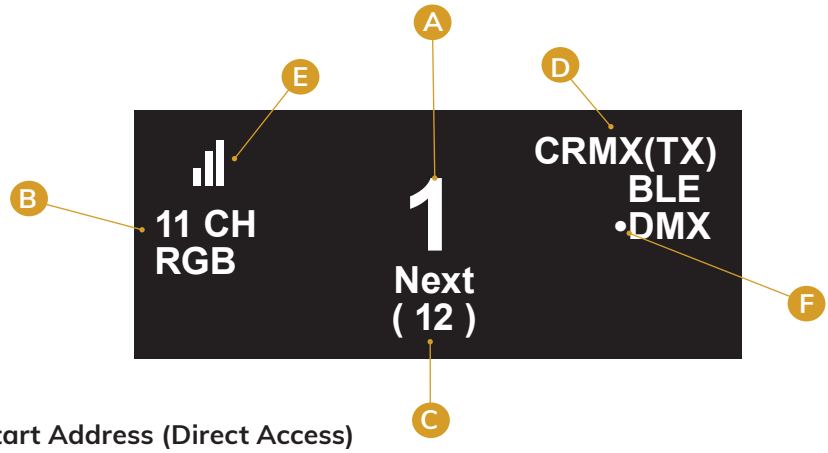

5.4.1 Set DMX Start Address (Direct Access)

At Home Screen the DMX address can be changed directly by using the up and down arrows. During this process the DMX address starts blinking, once it´s confirmed by pressing ENTER it stops blinking.
If the DMX address will not be confirmed by ENTER within 10 seconds, the display will jump back and show the DMX address from before and stops blinking.

5.4.2 Selecting DMX Mode*

At home screen please press ENTER to access to the main menu (level 1).
While using UP / DOWN arrows, please select the menu item “DMX Mode” and confirm by pressing ENTER.
In the following sub-menu (level 2), you can now choose between 16 different DMX operating modes while using the UP/Down arrows and confirm by pressing ENTER or jump back by pressing ESC.
After confirmation the display will jump back to main menu (level 1). Press ESC for homescreen, here the selected DMX mode will be displayed.

ⓘ ***Note:**
For detailed information about the several DMX modes including channel assignment please see our DMX Control chart.
.

Level 1

Menu
➖ DMX Mode
Stand Alone
Slave
Settings
System Info

Level 2

DMX Mode
➖ 3CH CCT
3CH RGB
6CH RGB
8CH RGB
11CH RGB
15CH RGB
4CH DIRECT
8CH DIRECT
9CH DIRECT
12CH DIRECT
17CH DIRECT
10CH HSI

5.4.3 Stand Alone*

Press ENTER to access to main menu (level 1).
While using the UP / DOWN arrows, please select the menu item “Stand Alone” and confirm by pressing ENTER.
In the following sub-menu (level 2), you can now choose between 6 different Stand Alone operating modes (Auto, Editor, Color Macro, Quick Color, Tunable White, User Color) ,Stop Stand Alone, Timer and Color Settings functions while using the UP/Down arrows and confirm by pressing ENTER or jump back by pressing ESC.

To finally use Stand Alone programs please make sure either DMX, CRMX RX or BLE is connected to the fixture, as these protocols have priority.

Stop Stand Alone
To stop a running Stand Alone mode immediately, please select “Stop Stand Alone” and confirm by pressing ENTER. The display will automatically jump back to level 1.

Level 1

Menu
DMX Mode
➖ Stand Alone
Slave
Settings
System Info

Level 2

Stand Alone Mode
➖ Stop Stand Alone
Auto
Editor
Color Macro
Quick Color
Tunable White
User Color
Timer
Color Settings

Auto*

Select “Auto” by using the up/down arrows and press ENTER.
Here at sub-menu (level 3) you can stop the effect and set the general speed and brightness of the effect.
To adjust speed, please use the UP / Down arrows to select the menu item "Speed" and confitm with ENTER. After that use Up / Down arrows to adjust the speed value between 000-100 anf confirm by ENTER or jump back by ESC.
To adjust brightness please select "Dimmer" as per the procedures previously described and confirm with ENTER. After that use Up / Down arrows to adjust the brightness value between 000-100 and confirm by ENTER or jump back by ESC.
Selecting "Effect" brings you to level 4. Using the Up / Down arrows you can select one of the 10 auto programs and confirm by pressing ENTER or step back by ESC.

Once it´s confirmed or denied the display will automatically jump back to level 3. To stop running a selected auto program please chose “Stop Program” at level 3 or "Stop Stand Alone" at level 2. For returning back to homescreen please press ESC three times. At homescreen the selected Stand Alone mode “Auto” and the selected program will be displayed.

ⓘ ***Note: Using arrows UP /DOWN at homescreen Auto programs can be directly changed according to the list.**

Level 1

Menu
DMX Mode
➨ Stand Alone
Slave
Settings
System Info

Level 2

Stand Alone Mode
Stop Stand Alone
➨ Auto
Editor
Color Macro
Quick Color
Tunable White
User Color
Timer
Color Settings

Level 3

Auto
➨ Stop Program
Dimmer <0-100>
Speed <0-100>
Effect

Level 4

Program
➨ 7-Color Fade
7-Color Jump
15-Color Fade
15-Color Jump
Police RB
Police B
Candle Light
Fireworks
Red Carpet
Welding

Editor*

At Editor you have up to three customizable programs which can be defined and run from the menus.
Each of the three values contains twenty four user-definable scenes with its own values for RGBL (RAW) or RGB (Calibrated) and shutter, playing continuously in a loop.Each scene has a definable fade-in time for the transition from one color to the other and wait-time.
To define a program please press ENTER to access to main menu (level 1).
While using the UP / DOWN arrows, please select the menu item “Stand Alone” and confirm by pressing ENTER.

Level 1

Menu
DMX Mode
➨ Stand Alone
Slave
Settings
System Info

Level 2

Stand Alone Mode
Stop Stand Alone
Auto
➨ Editor
Color Macro
Quick Color
Tunable White
User Color
Timer
Color Settings

Select “Editor” by using the up/down arrows and press ENTER.
Here at sub-menu (level 3) you can choose between Program 1-3, Dimmer and Stop Program. Using the Up/Down arrows you can select program 1, 2 or 3 and confirm by pressing ENTER or step back by ESC. After confirming your preferred program, you can now choose between Scene 1-24. Select one of the scenes and press ENTER or step back by ESC. At level 5 you can now set your color, shutter and fade / wait time in minutes and seconds. For creating a color jump please set value for "Fade Time" to 0, and "Wait Time" to at least 1 second.
Once it´s set your first scene is programmed.
You can now jump back to level 3 by using ESC. Here your program will starts automatically. For creating more scenes please use the same procedure. To stop an active program please press ESC and select “Stop Program” at level 3 or "Stop Stand Alone" at level 2. To start again, please re-select your preferred program, it will starts automatically again. To adjust the master brightness for program 1-3, you can use the item “Dimmer” at level 3 and select between 000-100 and confirm by ENTER or jump back by ESC.

ⓘ ***Note: Once "Factory Calibration" is selected under "Color Settings" inside Stand Alone, only values for RGB are available here.**
Using UP / DOWN arrows at homescreen Editor program can be directly changed according to the list. For choosing the right strobe effect please follow the Strobe Channel from our DMX chart at the end of this manual.

Level 3

Editor
Program 1
➡ Program 2
Program 3
Dim <0-**100**>
Stop Program

Level 4

Program
➡ Scene 1
Scene 2
Scene 3
...max. 24 Scenes

Level 5

Scene	
Red	<**0**-255>
Green	<**0**-255>
Blue	<**0**-255>
Lime	<**0**-255>
Shutter	<0-**255**>
Fade Time (min.)	<**0**-480>
Fade Time (sec.)	<**0**-59>
Wait Time (min.)	<**0**-720>
Wait Time (min.)	<**0**-59>

Color Macro*
46 different color macros (34x matched LEE color filters, 6 LED colors and 6 different Whites) are available as presets. For each the brightness can be adjusted separately.

Level 1

Menu
DMX Mode
➡ Stand Alone
Slave
Settings
System Info

Level 2

Stand Alone Mode
Stop Stand Alone
Auto
Editor
➡ Color Macro
Quick Color
Tunable White
User Color
Timer
Color Settings

Level 3

Color Macro
Color Off
➡ Color Macros
Color Macro Chart
Dim <0-**100**>

To select a color macro please press ENTER to access to main menu (level 1). While using the UP / DOWN arrows select the menu item “Stand Alone” and confirm by pressing ENTER. After please select the item “Color Macro” by using the up/down arrows and press ENTER again.
Using UP and DOWN controls, select your desired color preset and confirm with ENTER.
At level 3 you can adjust the brightness for the color preset between 000-100. Confirm by ENTER. For color blackout choose the item “Color Off”.

ⓘ **Note: Using UP / DOWN arrows at homescreen Color Macros can be changed according to the list.**

Level 4

Gels - Color Macros for Standalone Mode

Pos.	Gel Name	Color Number
1	Red	100% Red LED
2	Fire	LEE 019
3	Medium Red	LEE 027
4	Primary Red	LEE 106
5	Med Amber	LEE 020
6	Dark Amber	LEE 022
7	Deep Amber	LEE 104
8	Orange	LEE 105
9	Deep Golden Amber	LEE 135
10	Yellow	LEE 101
11	Green	100% Green LED
12	Lime Green	LEE 088
13	Moss Green	LEE 089
14	LEE Green	LEE 121
15	Primary Green	LEE 139
16	Jas Green	LEE 738

Gels - Color Macros for Standalone Mode

Pos.	Gel Name	Color Number
17	jade	LEE 323
18	Blue	100% Blue LED
19	Sky Blue	LEE 068
20	Tokyo Blue	LEE 071
21	Light Blue	LEE 118
22	Marine Blue	LEE 131
23	Med Blue	LEE 132
24	Congo Blue	LEE 181
25	Mikkel Blue	LEE 716
26	Rose Pink	LEE 002
27	Med Pink	LEE 036
28	Light Lavender	LEE 052
29	Lavender	LEE 058
30	Magenta	LEE 113
31	Mauve	LEE 126
32	Smokey Pink	LEE 127

Gels - Color Macros for Standalone Mode

Pos.	Gel Name	Color Number
33	Special Med Lavender	LEE 343
34	Ultimate Violet	LEE 707
35	Magical Magenta	LEE 795
36	Chrysalis Pink	LEE 798
37	Specia KH Lavender	LEE 799
38	Bulb White	2700K / High CRI
39	Halogen White	3200K / High CRI
40	Neutral White	4200K / High CRI
41	Daylight White	5600K / High CRI
42	Cold White I	6000K / High CRI
43	Cold White II	6300K / High CRI
44	Amber (only if available)	100% Amber LED
45	Lime (only if available)	100% Lime LED
46	Cyan (only if available)	100% Cyan LED

Quick Color*

The standalone mode “Quick Color” allows a direct adjustment of the single LED colors R, G, B, L, Dimmer and Shutter.

Level 1

Menu

- DMX Mode
- ➨ Stand Alone
- Slave
- Settings
- System Info

Level 2

Stand Alone Mode

- Stop Stand Alone
- Auto
- Editor
- Color Macro
- ➨ Quick Color
- Tunable White
- User Color
- Timer
- Color Settings

Level 3

Quick Color

Dimmer	<0-**100**>
Shutter	<0-**255**>
Red	<**0**-255>
Green	<**0**-255>
Blue	<**0**-255>
Lime	<**0**-255>

To adjust your Quick Color please press ENTER to access to main menu (level 1).

While using the UP / DOWN arrows select the menu item “Stand Alone” and confirm by pressing ENTER. After please select the item “Quick Color” by using the up/down arrows and press ENTER again.
Using UP and DOWN controls, select your desired color and confirm with ENTER.
After you can adjust the brightness for the color between 000-255 and confirm by ENTER.
Besides the individual color mix also a master dimmer can be adjusted between 000-100.
For strobe effects please adjust the Shutter value between 000-255.

ⓘ ***Note: Please see detailed explanation for strobe effects inside DMX chart at the end of this manual. If “Factory Calibration” is selected in “Color Settings” only R,G,B is available here.**
Using UP/DOWN arrows at homescreen you can change Quick Color´s dimmer value.

Tunable White*
The standalone mode “Tuneable White” allows the color temperature (CCT) to be adjusted from 2.000K – 10.000K in 100K steps. Besides brightness and shutter also a +/- green and magenta correction is available.

Level 1

Menu
DMX Mode
➨ Stand Alone
Slave
Settings
System Info

Level 2

Stand Alone Mode
Stop Stand Alone
Auto
Editor
Color Macro
Quick Color
➨ Tunable White
User Color
Timer
Color Settings

Level 3

Tunable White	
CCT	<**2000K-10.000**>
TINT	<**000**> (+/-127)
Dimmer	<0-**255**>
Shutter	<0-**255**>

Starting from home screen press ENTER to access to main menu (level 1).
While using the UP / DOWN arrows select the menu item “Stand Alone” and confirm by pressing ENTER.
After please select the item “Tunable White” by using the up/down arrows and press ENTER again.
Using UP and DOWN controls to select your desired menu item, confirm by ENTER and adjust the desired value by up and down controls and confirm all entries with ENTER.

ⓘ ***Note:**
Tint values

000	**= no function/neutral**
001 - 127	**= + green**
-001 to - 127	**= - green**

ⓘ ***Note: Using UP/DOWN arrows at homescreen the selected CCT value can be changed in +/- 100K steps.**
Shutter: Please see detailed explanation for strobe effects inside DMX chart at the end of this manual.

User Color*

The standalone mode “User Color” allows to store up to 5 customized color presets out of Red, Green, Blue, Lime, brightness and shutter.

Level 1	Level 2	Level 3	Level 4
Menu	**Stand Alone Mode**	**User Color**	**User Color**
DMX Mode	Stop Stand Alone	Color 1	Dimmer <0-**100**>
➡ Stand Alone	Auto	Color 2	Shutter <0-**255**>
Slave	Editor	Color 3	Red <**0**-255>
Settings	Color Macro	Color 4	Green <**0**-255>
System Info	Quick Color	Color 5	Blue <**0**-255>
	Tunable White		Lime <**0**-255>
	➡ User Color		
	Timer		
	Color Settings		

To define a User Color please press ENTER to access to main menu (level 1).
While using the UP / DOWN arrows, please select the menu item “Stand Alone” and confirm by pressing ENTER.
Select the item menu “User Color” by using the up/down controls and press ENTER.
Using UP and DOWN select your desired preset number (Color 1 -5) and confirm with ENTER.
Use UP and DOWN controls to select your desired color, confirm by ENTER and adjust the value by up and down controls between 000-255 and confirm all entries with ENTER.
With dimmer you can adjust the allover brightness of your User Color. Shutter allows several strobe effects. Once your color mix is ready, jump back by ESC. Your individual color is stored under the selected color preset now.

ⓘ ***Note: All five User Colors are also available by DMX at Color Macro channel. Using one of the RGB DMX modes, only User Colors mixed out of RGB values are available. For Direct modes, both RGB and RGBL User Colors are available. For detailed information please see Color Macro Chart at the end of this manual. Using UP/DOWN arrows at homescreen the Color Macros can be changed according to the list.**

Shutter: Please see detailed explanation for strobe effects inside DMX chart at the end of this manual.

Timer*

Via the internal timer function, all Stand Alone modes except "Auto" and "Editor" can be conveniently faded in and out after the function is enabled in the previously activated standalone mode, without the need for an external controller. Also it remains active even the fixture is switched off and restarted. SimultaNEO miniusly, the timer function is available via cable as well as via wireless DMX for master & slave operation. The fade-in time can be set from 0 to 60 minutes, the dwell time from 1 to 24 hours and the fade-out time from 0 to 60 minutes.
To select “Timer” please press ENTER to access to main menu (level 1). While using the UP / DOWN arrows, please select the menu item “Stand Alone” and confirm by pressing ENTER.

Select the item menu “Timer” by using the up/down controls and press ENTER. Now you can activate / deactivate the Timer function, select “Fade In”, “Dwell Time” or “Fade Out” for the individual settings and confirm with ENTER.
In each case a three-digit number field will be displayed. Use UP and DOWN to set the value as required from 000 to 060 minutes for “Fade In” and “Fade Out”, or 001 to 024 hours for the “Dwell Time”. Confirm by pressing ENTER again.

Level 1

Menu
DMX Mode
➨ Stand Alone
Slave
Settings
System Info

Level 2

Stand Alone Mode
Stop Stand Alone
Auto
Editor
Color Macro
Quick Color
Tunable White
User Color
➨ Timer
Color Settings

Level 3

Timer		
Timer	<On / **Off**>	
Fade In	<**0**-60 min>	1 minute steps
Dwell Time	<**1**-24h>	1 hour steps
Fade Out	<**0**-60 min>	1 minute steps

After all time settings have been configured, please activate the timer function by selecting the submenu item “Timer On/Off” using UP and DOWN, confirm with ENTER, select “On” and confirm with ENTER again.
To disable the timer function, please select “Off” and confirm by ENTER.

ⓘ ***Note: Please don´t forget to select one of the Stand Alone modes for "Startup Mode" at "Settings".**

Color Settings*
Here at “Color Settings” you can chose your preferred working color mode for all Stand Alone color modes. Either Factory Calibrated or RAW. Factory color calibration of R, G, B, L for a maximum of color consistency from unit to unit.
Please note If this function is activated only RGB is available at User Color and Quick Color. For a maximum of saturation please chose RAW mode.

Level 1

Menu
DMX Mode
➨ Stand Alone
Slave
Settings
System Info

Level 2

Stand Alone Mode
Stop Stand Alone
Auto
Editor
Color Macro
Quick Color
Tunable White
User Color
Timer
➨ Color Settings

Level 3

Color Settings
➨ **Factory Calibrated**
RAW

5.4.5 Settings

Level 1

Menu
DMX Mode Stand Alone Slave ➡ Settings System Info

Main Menu	Menu level 2	Menu level 3	Menu level 4	Description
Settings	Wireless DMX	CRMX	<on/**off**>	On=CRMX enabled / Off= CRMX disabled
		Operating Mode	<**receive**/transmit>	Receive= CRMX module as Receiver Transmit= CRMX module as Transmitter
		Transmit Link	<**no**/yes>	Yes= pair with CRMX devices. CRMX must be activated on all devices and the pairing must be picked up by a transmitter (Receive Reset). No= Linking disabled
		Receive Reset	<**no**/yes>	Yes = retain transmitter pairing No = do not retain transmitter pairing
		Pass to DMX Out	<**no**/yes>	Yes= incoming wireless DMX and BLE signal will be passed to wired DMX out No= incoming wireless DMX and BLE signal will not be passed to wired DMX out
		Signal Strength	0-100	CRMX signal strength
		BLE	<on/**off**>	On= BLE enabled / Off= BLE disabled
		BLE Link	<**no**/yes>	Link = starts bluetooth advertising for at least 1 minute
		BLE Password	<**000000**>	Set 6-digits user Password for connection to your mobile device (ROXXAPP)
	Protocol	**DMX**		enables DMX protocol
		Slave		Confirm with ENTER, after Slave Mode is activated Display will show Slave Mode. Connect the master and slave units (same model) with either DMX cable or Wireless DMX (set Master to Trasnmit mode, Slave to Receive mode) and enable one of the standalone modes on the master unit (Auto, Quick Color).

Main Menu	Menu level 2	Menu level 3	Menu level 4	Description
Settings	Display	Auto Flip	<**on**/off>	On= Auto-Display-Flip-Function enabled Off= Auto-Display-Flip-Function disbaled
		Backlight	<**on**/off>	On= controls permanent on, display itself will deactivate after 60 minues of incativity Off= controls and display deactivation after approximately 1 minute of inactivity
		Auto Lock	<on/**off**>	On= Automatically locks the controls after approximately 1 minute of inactivity. After attempted input the display shows: „Locked!“ Unlock process: press arrows up, down, up, down consecutively
		User Control	Auto FX	
			Quick Color	
			Tint	
			User Colors	
			Highlight (5600K)	If "Highlight" is selected here, and "USER" control button on the display is pressed, the fixture will show 5600K White for 15 seconds, evem an outside protocol like DMX or Wireless DMX is connected. After 15sec. the fixture will display the DMX signal again. If no DMX is connected, please show blackout after 15 seconds.
	Startup Mode (using last adjustments of specific Standalone Modes)	**Hold**		Fixture starts with the same settings just before switching off
		DMX		Select your default operating mode when fixture is powered on
		Auto		
		Editor		
		Color Macro		
		Quick Color		
		Tunable White		
		User Color		
	DMX Fail	**Hold** (factory default)		Hold= last command retains
		Blackout		Blackout= Activates Blackout
		Emergency Light		Emergency Light= Fixtures changes to 5600K
	Dimmer Curve	**Linear**		Linear= Light intensity increases linear with DMX value
		Exponential		Exponential= Light intensity can be set more smooth at lower DMX values and broadly at higher DMX values.
		Logarithmic		Light intensity can be broadly adjusted at lower DMX values and more smooth at higher DMX values
		S-Curve		Light intensity can be adjusted smoothly at lower and higher DMX values and broadly at medium DMX values
	Dimmer Response	**LED**		The LED responds abruptly to it´s DMX values
		Halogen		The LED responds similar to a halogen fixture with soft changes at brightness.
	Color Calibration	**Normal CRI**		
		High CRI		

Main Menu	Menu level 2	Menu level 3	Menu level 4	Description
Settings	RAW Balance (affects RAW Mode in DMX and Stand-alone control)	User Calibration	Red <0-**255**>	Individual color calibration for R,G,B,L
			Green <0-**255**>	
			Blue <0-**255**>	
			Lime <0-2**55**>	
	LED Frequency	800 Hz	Select preferred LED PWM frequency	
		1200 Hz		
		2000 Hz		
		3600 Hz		
		12000 Hz		
		25000 Hz		
	Fan	**Auto 1**		Adjust fan speed relative to internal fixture temperature, maximum 2500rpm
		Auto 2		Adjust fan speed relative to internal fixture temperature, maximum 3000rpm
		Silent		Low fan speed for silent operation, maximum 1800rpm
		Studio		Low fan speed for silent operation, maximum 1500rpm
		Fan Off		Fan Off
		Max Power		High fan speed for maximum cooling effect, maximum 3000rpm
	Redshift	On / **Off**	On= Activates Redshift, Off= Deactivates Reds-hift	Redshift function simulate traditional halogen fixtures while dimming down. Redshift affects only between 2700-3500K.
	USB Update	Auto		Runs firmware update automatically, once USB stick gets plugged in
		Manual		Runs firmware update manually after USB stick gets plugged in
		No		Do not run firmware update via USB port

Main Menu	Menu level 2	Menu level 3	Menu level 4	Menu Level 5
Settings	Factory / User Reset For more and detailed information about the different reset options please refer to chapter "5.4.6.1 Reset functions"	Factory Reset	Are you sure to reset? / Confirm by pressing ENTER, cancel with ESC	Restores all factory defaults , but not User defaults and no User Colors
		User Reset	Are you sure to reset? / Confirm by pressing ENTER, cancel with ESC	Restores all User Reset according to the User Preset List. User Colors will not set back. Timer Function and DMX adress restore to Factory default. Once User Reset is activated a fixture self test will start. Self Test is not available while activating User Rest by DMX Settings.
		User Reset List	DMX Mode 3CH CCT, 3CH RGB, 6CH RGB, 8CH RGB, 11CH RGB, 15CH RGB, 4CH DIRECT, 8CH DIRECT, 9CH DIRECT, 12CH DIRECT, 17CH DIRECT, 10CH HSI	Select your User Reset defaults
			CRMX <on/**off**>	
			CRMX Operating Mode. <**receive**/transmit>	
			CRMX Receive Reset <**no**/yes>	
			BLE <on/**off**>	
			BLE Link <**no**/yes>	
			BLE Password <**000000**>	
			CRMX Pass to DMX Out <**no**/yes	
			Display Flip <**on**/off>	
			Backlight <**on**/off>	Select your User Reset defaults
			Auto Lock <on/**off**>	
			Display User Control <Auto FX/Quick Color, **Tint,** User Colors, Highlight>	
			Startup Mode <**Hold**/DMX/Auto/Editor/Color Macro, Quick Color, Tunable White, User Color>	
			DMX Fail <**Hold**/Blackout/Emergency)>	
			Dimmer Curve <**Linear**, Exponential, Logarithmic, S-Curve>	
			Dimmer Response <**LED**, Halogen >	
			Color Calibration **Normal CRI** / High CRI	
			RAW Balance <**RAW** / User Calibration>	
			LED Frequency <800Hz, **1200Hz**, 2000Hz, 3600Hz, 12000Hz, 25000Hz>	
			Fan <**Auto1**, Auto 2, Silent, Studio, Fan Off, Max Power>	
			Redshift <on/**off**>	
			USB update <Auto, **Manual**, No>	

Dimmer Curves

Linear

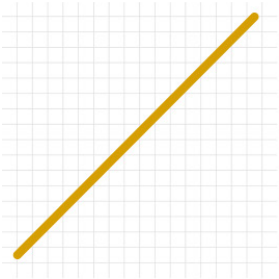

Exponential

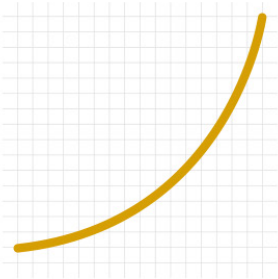

Logarithmic

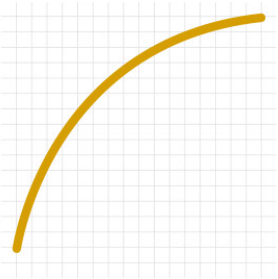

S-Curve

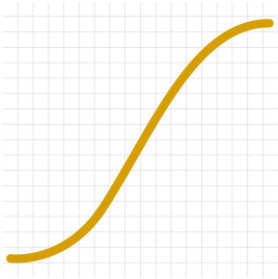

5.4.5.1 Reset Functions

1. Via DMX

Factory / User Reset only starts if shutter channel has the DMX value “250” at the same time

- *Factory Reset:*
  DMX address and DMX mode stay on the same value as set before the reset. All other settings will set back to default
- *User Reset:*
  DMX address and DMX mode stay on the same value as set before the reset.
  There is no LED / Fan test. All other settings will set back to User Reset List.

2. Via RDM

Factory / User Reset only starts if shutter channel has the DMX value “250” at the same time

- *Factory Reset:*
  DMX address and DMX mode stay on the same value as set before the reset
  All other settings will set back to default
- *User Reset:*
  DMX address and DMX mode stay on the same value as set before the reset.
  All other settings will set back to User Reset List.

There is no LED / Fan test

3. Via Menu / Display Shortcut

- *Factory Reset:*
  Display Query:
  “> With Add. / Mode
  No Add. / Mode
  RESET NOW?”
  - If “With Add. / Mode” is selected, DMX address is set to “1” and DMX mode changes to default mode. All other settings will set back to default
  - If “No Add. / Mode” is selected, DMX address and DMX Mode stay at current values. All other settings will set back to default

- User Reset:
  Display Query:
  “> With Add. / Mode
  No Add. / Mode
  RESET NOW?”
  - If “With Add. / Mode” is selected, DMX address is set to “1” and DMX mode changes to the mode defined by “User Reset List / DMX Mode”. All other settings will set back to User Reset List.
  - If “No Add. / Mode” is selected, DMX address and DMX Mode stay at current values. All other settings will set back to User Reset List.

Unit Starts LED / Fan test.

5.4.6 System Info

Level 1

Menu
DMX Mode
Stand Alone
Slave
Settings
➖ System Info

Main Menu	Menu level 2	Menu level 3	Menu level 4
System Info	Firmware Version	vx.xx	Display installed firmware version
	Serial Number	139xxxxxxxx	
	RDM UID	0X6a6axxxxxxxx	Display unique RDM ID for identification
	Temperatures	Celsius LED : XXX°C or Fahrenheit LED : XXX °F	Display fixture temperature by celsius and fahrenheit
	Power on Time	Total: xxxxxhours	Display fixture total power on time
	LED on Time	Total: xxxxxhours	Display LED total power on time
	Errors	Errors information	Display error codes

6. ACCESSORIES

6.1 Filters

Available filters of ROXX NEO mini with order numbers:

Very Narrow 10°
Art.: 14907001

Narrow 15°
Art.: 14907101

Medium 40°
Art.: 14907201

Wide 80°
Art.: 14907301

Horizontal 60° x 10°
Art.: 14907401

Vertical 10° x 60°
Art.: 14907501

6.2 More accessories

8-way Barndoor
Art.: 14907601

Omega Bracket ST
Art.: 90900002-2

Amptown Case 6x
Art.: 14907711

Casetec Case 6x
Art.: 14907741

7. TECHNICAL DATA / DIAGRAMS

7.1 Technical drawings and measurements

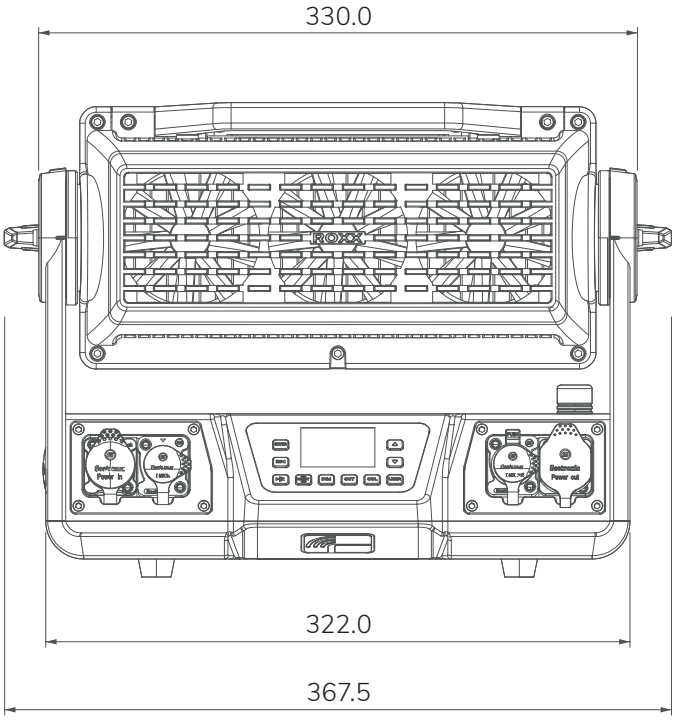

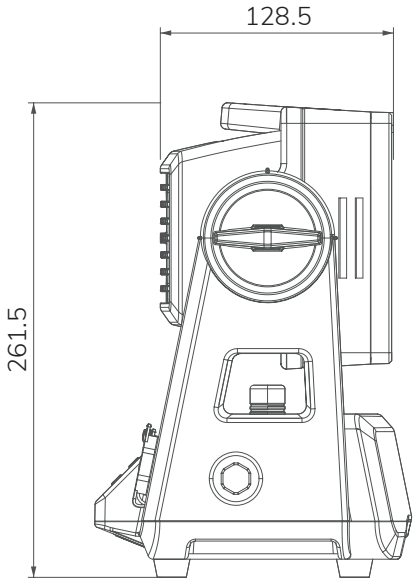

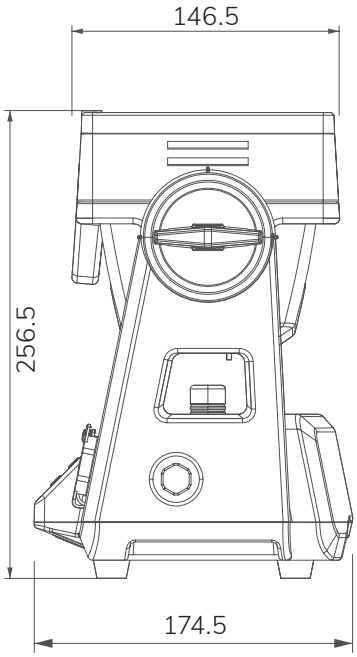

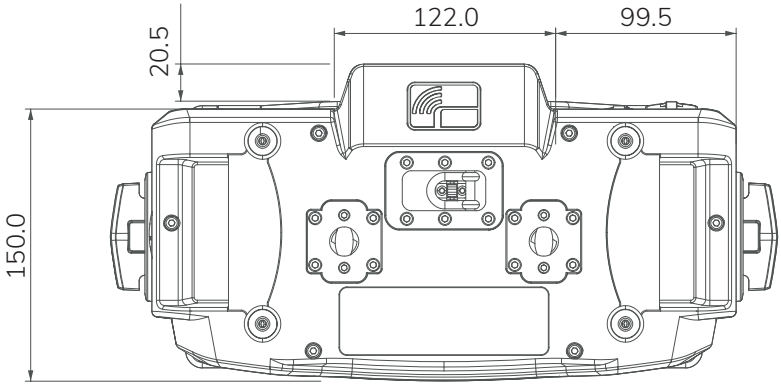

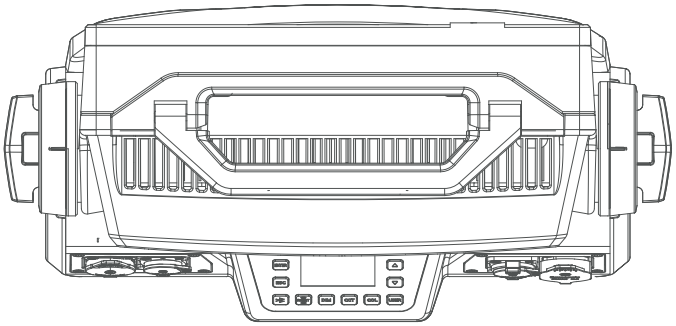

7.2 IP Rating

ROXX products conform to officially classified IP standard levels. NEO mini is rated to IP65 when using the covers for the housing parts. IP stands for Ingress Protection and IP65, according to classified standard, means shielded against dust and high-pressure jets of water from any side.

Ingress Protection

6 5

Protected against a solid object exceeding 50mm, for example, a hand.	1	1	Protected against vertically falling water drops. Limited infiltration is permitted.
Protected against a solid object exceeding 12.5mm, for example, a finger.	2	2	Protected against vertically falling water drops when the enclosure is tilted up to 15 degrees from the vertical. Limited infiltration is permitted.
Protected against a solid object exceeding 2.5mm, for example, a screwdriver.	3	3	Protected against water spray up to 60 degrees from the vertical. Limited infiltration is permitted.
Protected against a solid object exceeding 1mm, for example, a wire.	4	4	Protected against splashes of water from all directions. Limited infiltration is permitted.
Dust protected. Limited ingress of dust allowed. Does not affect the operation of the device.	5	5	Protected against water jets. Limited infiltration is permitted.
Dustproof. No infiltration of dust.	6	6	Protected against strong water jets. Limited infiltration is permitted.
		7	Protected against the impact of being immersed in water between 15cm and 1m for 30 minutes.
		8	Protected against the impact of being immersed in water under pressure for prolonged periods of time.

7.3 Technical Data

Photometrics	
LED expected lifetime	50.000 hours
Lightsource	10x 60W RGBL
Type of optical system	TIR lens
LED PWM Frequency	selectable 800Hz, 1.200Hz, 2.000Hz, 3.600Hz, 12kHz, 25kHz
Beam angles @ Full (50%)	8° (native)
Maximum Field angles @ Full (10%)	16° (native)
Color temperature range	2000-10.000K
CRI/Ra @ 5600K	85
TLCI @ 5600K	74
Luminous flux @ Full (RAW)	20.681lm (677,6 W).
Luminous flux @ 5600K (Normal CRI)	20.210lm (533,1W).
Luminous flux @ 5600K (High CRI)	14.699lm (299,8 W).
illuminance Lux @ 5m / 16,4ft (@ Full)	22.739lx
illuminance Lux @ 5m / 16,4ft (@ 5600K Normal CRI)	22.297lx
illuminance Lux @ 5m / 16,4ft (@ 5600K High CRI)	15.863lx
Efficancy @ Full (max)	49 lm/W
Dimensions & Weight	
IP class	IP65
IK class	IK08
Body material	Aluminum, Nylon
Lens material	Tempered glass front
Net dimensions (w x h x d)	367,5 x 261,5 x 174,5 mm
Net dimensions inches	14,47 x 10,30 x 6,87 inches
Net weight (incl. Yoke)	7,7kg / 16,97 lbs
Tilt	220°
Tilt Locking System	Locking system including angle indicator
Thermal Characteristics	
Cooling	Active, Forced Air, Temperature-regulated
Humidity (max.)	95%
Temperature range, Operating	-40°C to 45°C
Temperature range, Start-Up	-20° to 45°C
Temperature range, Storage	-40°C to 80°C
Thermal Protection	Automatic overtemperature protection
Electrical Data	
AC Power, max	90 – 285V 50/60Hz
AC Power, nominal	100 – 240V 50/60Hz
Electrical protection	Overload protection with automatic recover
Max. power consumption	674W @ 100V / 644W@ 230V
Standby Power	13,4W
Power Thru max. @ 100V	5A (ETL) / 8A
Power Thru max. @ 230V	9A (ETL) / 12A

7.3 Technical Data

Electrical Data	
Power Linking	3 units @ 230V / 1 unit @ 120V
Power Factor	PF0.996 @ 100V / PF0.979 @ 230V
Power Supply Unit	Inbuilt auto-ranging electronic switch-mode
Operator & Controller	
DMX channels	3CH CCT, 3CH RGB, 6CH RGB, 8CH RGB, 11CH RGB, 15CH RGB, 4CH DIRECT, 8CH DIRECT, 9CH DIRECT, 12CH DIRECT, 17CH DIRECT, 10CH HSI
DMX modes	12
Protocol	USITT DMX512A RDM ANSI E1.20 CRMX, W-DMX™ G2, W-DMX™ G3, W-DMX™ G4, W-DMX™ G4S Bluetooth (Low Energy)
Setting and addressing	2.0" TFTdisplay / 10 controls RDM ANSI E1.20 Near Field Control (NFC)
Standalone mode	Auto Program, Color Macro, Quick Color, Tunable White, User Color
Wireless DMX	Lumen Radio transmitt & receive function (CRMX)
Indicator	2.0" TFT display
Controls	10 backlighted controls
Strobe	0-30Hz
DMX I/O	IP65 XLR 5-pin male/female
Power In	TRUE1 compatible input & link-thru sockets
USB Firmware Update	IP65 USB socket
Included / Optional	
Included items	2m Power Cable
Optional Accessories	Multiple magnetic filters (circular / elliptical, smoked-clear), 8-Way Barndoor, Omega Bracket ST
Color options	Black – RAL 9004 (Standard) Custom color – any RAL (on request)
Installation	
Mounting point on fixture bottom side	1x 1/4 turn Omega Bracket
Orientation	Any
Rigging possibilities	hanging direct
Safety features	1x bottom mount for fixtures safety wire / 2x Yoke mount for accessory safety wires
Minimum distance from flammable materials	0,3 meters (11,8 inch)

7.4 DMX-Charts / Color Macro Charts / CCT Chart

3CH CCT	8CH RGB	4CH DIRECT	12CH DIRECT
3CH RGB	11CH RGB / Default Mode	8CH DIRECT	17CH DIRECT
6CH RGB	15CH RGB	9CH DIRECT	10CH HSI

Channel	3CH CCT	3CH RGB	6CH RGB	8CH RGB	11CH RGB (default)	15CH RGB
1	Dimmer	Red	Red	Dimmer	Dimmer	Dimmer
2	CTC	Green	Red Fine	Shutter	Shutter	Dimmer Fine
3	Tint	Blue	Green	Red	Duration	Shutter
4			Green Fine	Green	Red	Duration
5			Blue	Blue	Green	Red
6			Blue Fine	CTC	Blue	Red Fine
7				Tint	CTC	Green
8				Device Settings	Tint	Green Fine
9					Color Macro	Blue
10					Color Macro Crossfade	Blue Fine
11					Device Settings	CTC
12						Tint
13						Color Macro
14						Color Macro Crossfade
15						Device Settings

Channel	4CH DIRECT	8CH DIRECT	9CH DIRECT	12CH DIRECT	17CH DIRECT	10CH HSI
1	Red	Red	Dimmer	Dimmer	Dimmer	Dimmer
2	Green	Red Fine	Shutter	Shutter	Dimmer Fine	Dimmer Fine
3	Blue	Green	Red	Duration	Shutter	Shutter
4	Lime	Green Fine	Green	Red	Duration	Hue
5		Blue	Blue	Green	Red	Saturation
6		Blue Fine	Lime	Blue	Red Fine	CTC
7		Lime	CTC	Lime	Green	Tint
8		Lime Fine	Tint	CTC	Green Fine	Color Macro
9			Device Settings	Tint	Blue	Color Macro Crossfade
10				Color Macro	Blue Fine	Device Settings
11				Color Macro Crossfade	Lime	
12				Device Settings	Lime Fine	
13					CTC	
14					Tint	
15					Color Macro	
16					Color Macro Crossfade	
17					Device Settings	

3CH CCT	8CH RGB	4CH DIRECT	12CH DIRECT
3CH RGB	11CH RGB / Default Mode	8CH DIRECT	17CH DIRECT
6CH RGB	15CH RGB	9CH DIRECT	10CH HSI

3 CH CCT MODE (Color Calibrated)				
Ch.	Function	Value	Setting	Default
1	**Dimmer**	000-255	0 - 100%	0
2	**CTC**	000 - 004	5600K	0
		005-226	2000K-6500K linear in 20-21K steps (please see detailed CTC chart)	
		182-182	5600K	
		226-226	6500K	
		227-255	6621K-10.000K linear in 120-121K steps (please see detailed CTC chart)	
3	**Tint** (affects CCT)	0	no function	128
		001-127	Magenta -> Neutral	
		128-128	Neutral	
		129-255	Neutral -> Green	

3 CH - RGB MODE (Color Calibrated)				
Ch.	Function	Value	Setting	Default
1	**Red**	000-255	0 - 100%	0
2	**Green**	000-255	0 - 100%	0
3	**Blue**	000-255	0 - 100%	0

6 CH - RGB MODE (Color Calibrated)				
Ch.	Function	Value	Setting	Default
1	**Red**	000-255	0 - 100%	0
2	**Red Fine**	000-255	0 - 100%	0
3	**Green**	000-255	0 - 100%	0
4	**Green Fine**	000-255	0 - 100%	0
5	**Blue**	000-255	0 - 100%	0
6	**Blue Fine**	000-255	0 - 100%	0

8 CH - RGB (Color Calibrated)					
Ch.	**Function**	**Value**	**Setting**		**Default**
1	**Dimmer**	000-255	0 - 100%		0
2	**Shutter**	000 - 019	Shutter close		20
		020 - 024	Shutter open		
		025 - 064	Strobe 1 (fast ➔ slow)		
		065 - 069	Shutter open		
		070 - 084	Strobe 2: opening pulse (fast ➔ slow)		
		085 - 089	Shutter open		
		090 - 104	Strobe 3: closing pulse (fast ➔ slow)		
		105 - 109	Shutter open		
		110 - 124	Strobe 4: random strobe (fast ➔ slow)		
		125 - 129	Shutter open		
		130 - 144	Strobe 5: random opening pulse (fast ➔ slow)		
		145 - 149	Shutter open		
		150 - 164	Strobe 6: random closing pulse (fast ➔ slow)		
		165 - 169	Shutter open		
		170 - 184	Strobe 7: burst pulse (fast ➔ slow)		
		185 - 189	Shutter open		
		190 - 204	Strobe 8: random burst pulse (fast ➔ slow)		
		205 - 209	Shutter open		
		210 - 224	Strobe 9: sine wave (fast ➔ slow)		
		225 - 229	Shutter open		
		230 - 244	Strobe 10: burst (fast ➔ slow)		
		245 - 255	Shutter open		
3	**Red**	000-255	0 - 100%		255
4	**Green**	000-255	0 - 100%		255
5	**Blue**	000-255	0 - 100%		255
6	**CTC** (affects RGB)	000 - 004	5600K	according to CTC chart	0
		005-226	2000K-6500K (please see detailed CTC chart)		
		182-182	5600K		
		226-226	6500K		
		227-255	6621K-10.000K (please see detailed CTC chart)		
7	**Tint** (affects CTC, RGB)	0	no function		128
		001-127	Magenta ➔ Neutral		
		128-128	Neutral		
		129-255	Neutral ➔ Green		
8	**Device Settings**			according to Device Settings RGB mode	0

11 CH RGB Mode (Color Calibrated) - Default mode				
Ch.	**Function**	**Value**	**Setting**	**Default**
1	**Dimmer**	000-255	0 - 100%	0
2	**Shutter**	000 - 019	Shutter close	20
		020 - 024	Shutter open	
		025 - 064	Strobe 1 (fast ⊖ slow)	
		065 - 069	Shutter open	
		070 - 084	Strobe 2: opening pulse (fast ⊖ slow)	
		085 - 089	Shutter open	
		090 - 104	Strobe 3: closing pulse (fast ⊖ slow)	
		105 - 109	Shutter open	
		110 - 124	Strobe 4: random strobe (fast ⊖ slow)	
		125 - 129	Shutter open	
		130 - 144	Strobe 5: random opening pulse (fast ⊖ slow)	
		145 - 149	Shutter open	
		150 - 164	Strobe 6:random closing pulse (fast ⊖ slow)	
		165 - 169	Shutter open	
		170 - 184	Strobe 7: burst pulse (fast ⊖ slow)	
		185 - 189	Shutter open	
		190 - 204	Strobe 8: random burst pulse (fast ⊖ slow)	
		205 - 209	Shutter open	
		210 - 224	Strobe 9:sine wave (fast ⊖ slow)	
		225 - 229	Shutter open	
		230 - 244	Strobe 10: burst (fast ⊖ slow)	
		245 - 255	Shutter open	
3	**Duration** (only affects to channel 2 - Strobe 1 025-064)	000-255	0 - 100%	0
4	**Red**	000-255	0 - 100%	255
5	**Green**	000-255	0 - 100%	255
6	**Blue**	000-255	0 - 100%	255
7	**CTC** (affects RGB)	000 - 004	5600K	according to CTC chart	0
		005-226	2000K-6500K linear in 20-21K steps (please see detailed CTC chart)	
		182-182	5600K	
		226-226	6500K	
		227-255	6621K-10.000K linear in 120-121K steps (please see detailed CTC chart)	
8	**Tint** (affects CTC and RGB)	0	no function	128
		001-127	Magenta -> Neutral	
		128-128	Neutral	
		129-255	Neutral -> Green	

9	**Color Macro** (override RGB/CTC)		please use color macros from ROXX color macro chart		0
10	**Color Macro Crossfade** (Transition Time between Color Macros)	000 - 005	no function		0
		006-105	0,1s - 10s (0,1s steps)		
		106-214	11s - 119s (1s steps)		
		215-244	2m - 4m50s (10s steps)		
		245-255	5m - 15m (1m steps)		
11	**Device Settings**			according to Device Settings RGB mode	0

15 CH RGB Mode (Color Calibrated)

Ch.	Function	Value	Setting		Default
1	**Dimmer**	000-255	0 - 100%		0
2	**Dimmer Fine**	000-255	0 - 100%		0
3	**Shutter**	000 - 019	Shutter close		20
		020 - 024	Shutter open		
		025 - 064	Strobe 1 (fast ⊖ slow)		
		065 - 069	Shutter open		
		070 - 084	Strobe 2: opening pulse (fast ⊖ slow)		
		085 - 089	Shutter open		
		090 - 104	Strobe 3: closing pulse (fast ⊖ slow)		
		105 - 109	Shutter open		
		110 - 124	Strobe 4: random strobe (fast ⊖ slow)		
		125 - 129	Shutter open		
		130 - 144	Strobe 5: random opening pulse (fast ⊖ slow)		
		145 - 149	Shutter open		
		150 - 164	Strobe 6:random closing pulse (fast ⊖ slow)		
		165 - 169	Shutter open		
		170 - 184	Strobe 7: burst pulse (fast ⊖ slow)		
		185 - 189	Shutter open		
		190 - 204	Strobe 8: random burst pulse (fast ⊖ slow)		
		205 - 209	Shutter open		
		210 - 224	Strobe 9:sine wave (fast ⊖ slow)		
		225 - 229	Shutter open		
		230 - 244	Strobe 10: burst (fast ⊖ slow)		
		245 - 255	Shutter open		
4	**Duration**	000-255	0 - 100%	(only affects to channel 3 - Strobe 1 025-064)	0
5	**Red**	000-255	0 - 100%		255
6	**Red Fine**	000-255	0 - 100%		255
7	**Green**	000-255	0 - 100%		255
8	**Green Fine**	000-255	0 - 100%		255
9	**Blue**	000-255	0 - 100%		255
10	**Blue Fine**	000-255	0 - 100%		255

15 CH RGB Mode (Color Calibrated)					
11	**CTC** (affects RGB)	000 - 004	5600K	according to CTC chart.	0
		005-226	2000K-6500K linear in 20-21K steps (please see detailed CTC chart)		
		182-182	5600K		
		226-226	6500K		
		227-255	6621K-10.000K linear in 120-121K steps (please see detailed CTC chart)		
12	**Tint** (affects CTC and RGB)	0	no function		128
		001-127	Magenta -> Neutral		
		128-128	Neutral		
		129-255	Neutral -> Green		
13	**Color Macro** (override RGB /CTC)		According to Color Macro Chart		0
14	**Color Macro Crossfade** (Transition Time between Color Macros)	000 - 005	no function		0
		006-105	0,1s - 10s (0,1s steps)		
		106-214	11s - 119s (1s steps)		
		215-244	2m - 4m50s (10s steps)		
		245-255	5m - 15m (1m steps)		
15	**Device Settings**			according to Device Settings RGB mode	0

4 CH - DIRECT MODE (RAW Balance)				
Ch.	Function	Value	Setting	Default
1	**Red**	000-255	0 - 100%	0
2	**Green**	000-255	0 - 100%	0
3	**Blue**	000-255	0 - 100%	0
4	**Lime**	000-255	0 - 100%	0

8 CH - DIRECT MODE (RAW Balance)				
Ch.	Function	Value	Setting	Default
1	**Red**	000-255	0 - 100%	0
2	**Red Fine**	000-255	0 - 100%	0
3	**Green**	000-255	0 - 100%	0
4	**Green Fine**	000-255	0 - 100%	0
5	**Blue**	000-255	0 - 100%	0
6	**Blue Fine**	000-255	0 - 100%	0
7	**Lime**	000-255	0 - 100%	0
8	**Lime Fine**	000-255	0 - 100%	0

9 CH - DIRECT MODE (RAW Balance)					
Ch.	**Function**	**Value**	**Setting**		**Default**
1	**Dimmer**	000-255	0 - 100%		0
2	**Shutter**	000 - 019	Shutter close		20
		020 - 024	Shutter open		
		025 - 064	Strobe 1 (fast ⊖ slow)		
		065 - 069	Shutter open		
		070 - 084	Strobe 2: opening pulse (fast ⊖ slow)		
		085 - 089	Shutter open		
		090 - 104	Strobe 3: closing pulse (fast ⊖ slow)		
		105 - 109	Shutter open		
		110 - 124	Strobe 4: random strobe (fast ⊖ slow)		
		125 - 129	Shutter open		
		130 - 144	Strobe 5: random opening pulse (fast ⊖ slow)		
		145 - 149	Shutter open		
		150 - 164	Strobe 6:random closing pulse (fast ⊖ slow)		
		165 - 169	Shutter open		
		170 - 184	Strobe 7: burst pulse (fast ⊖ slow)		
		185 - 189	Shutter open		
		190 - 204	Strobe 8: random burst pulse (fast ⊖ slow)		
		205 - 209	Shutter open		
		210 - 224	Strobe 9:sine wave (fast ⊖ slow)		
		225 - 229	Shutter open		
		230 - 244	Strobe 10: burst (fast ⊖ slow)		
		245 - 255	Shutter open		
3	**Red**	000-255	0 - 100%		255
4	**Green**	000-255	0 - 100%		255
5	**Blue**	000-255	0 - 100%		255
6	**Lime**	000-255	0 - 100%		255
7	**CTC** (affects RGBL)	000 - 004	RAW	according to CTC chart.	0
		005-226	2000K-6500K linear in 20-21K steps (please see detailed CTC chart)		
		182-182	5600K		
		226-226	6500K		
		227-255	6621K-10.000K linear in 120-121K steps (please see detailed CTC chart)		
8	**Tint** (affects CTC and RGBL)	0	no function		128
		001-127	Magenta -> Neutral		
		128-128	Neutral		
		129-255	Neutral -> Green		
9	**Device Settings**			according to Device Settings DIRECT mode	0

12 CH - DIRECT MODE (RAW Balance)					
Ch.	**Function**	**Value**	**Setting**		**Default**
1	**Dimmer**	000-255	0 - 100%		0
2	**Shutter**	000 - 019	Shutter close		20
		020 - 024	Shutter open		
		025 - 064	Strobe 1 (fast ⊖ slow)		
		065 - 069	Shutter open		
		070 - 084	Strobe 2: opening pulse (fast ⊖ slow)		
		085 - 089	Shutter open		
		090 - 104	Strobe 3: closing pulse (fast ⊖ slow)		
		105 - 109	Shutter open		
		110 - 124	Strobe 4: random strobe (fast ⊖ slow)		
		125 - 129	Shutter open		
		130 - 144	Strobe 5: random opening pulse (fast ⊖ slow)		
		145 - 149	Shutter open		
		150 - 164	Strobe 6:random closing pulse (fast ⊖ slow)		
		165 - 169	Shutter open		
		170 - 184	Strobe 7: burst pulse (fast ⊖ slow)		
		185 - 189	Shutter open		
		190 - 204	Strobe 8: random burst pulse (fast ⊖ slow)		
		205 - 209	Shutter open		
		210 - 224	Strobe 9:sine wave (fast ⊖ slow)		
		225 - 229	Shutter open		
		230 - 244	Strobe 10: burst (fast ⊖ slow)		
		245 - 255	Shutter open		
3	**Duration**	000-255	0 - 100%	(only affects to channel 3 - Strobe 1 025-064)	0
4	**Red**	000-255	0 - 100%		255
5	**Green**	000-255	0 - 100%		255
6	**Blue**	000-255	0 - 100%		255
7	**Lime**	000-255	0 - 100%		255
8	**CTC** (affects RGBL)	000 - 004	RAW	according to CTC chart	0
		005-226	2000K-6500K linear in 20-21K steps (please see detailed CTC chart)		
		182-182	5600K		
		226-226	6500K		
		227-255	6621K-10.000K linear in 120-121K steps (please see detailed CTC chart)		
9	**Tint** (affects CTC and RGBL)	0	no function		128
		001-127	Magenta -> Neutral		
		128-128	Neutral		
		129-255	Neutral -> Green		
10	**Color Macro** (over-ride RGBL,CTC)		according to Color Macro Chart		0

12 CH - DIRECT MODE (RAW Balance)					
11	**Color Macro Crossfade** (Transition Time between Color Macros)	000 - 005	no function		0
		006-105	0,1s - 10s (0,1s steps)		
		106-214	11s - 119s (1s steps)		
		215-244	2m - 4m50s (10s steps)		
		245-255	5m - 15m (1m steps)		
12	**Device Settings**			according to Device Settings DIRECTmode	0

17 CH - DIRECT MODE (RAW Balance)					
Ch.	**Function**	**Value**	**Setting**		**Default**
1	**Dimmer**	000-255	0 - 100%		0
2	**Dimmer Fine**	000-255	0 - 100%		0
3	**Shutter**	000 - 019	Shutter close		20
		020 - 024	Shutter open		
		025 - 064	Strobe 1 (fast ⊖ slow)		
		065 - 069	Shutter open		
		070 - 084	Strobe 2: opening pulse (fast ⊖ slow)		
		085 - 089	Shutter open		
		090 - 104	Strobe 3: closing pulse (fast ⊖ slow)		
		105 - 109	Shutter open		
		110 - 124	Strobe 4: random strobe (fast ⊖ slow)		
		125 - 129	Shutter open		
		130 - 144	Strobe 5: random opening pulse (fast ⊖ slow)		
		145 - 149	Shutter open		
		150 - 164	Strobe 6:random closing pulse (fast ⊖ slow)		
		165 - 169	Shutter open		
		170 - 184	Strobe 7: burst pulse (fast ⊖ slow)		
		185 - 189	Shutter open		
		190 - 204	Strobe 8: random burst pulse (fast ⊖ slow)		
		205 - 209	Shutter open		
		210 - 224	Strobe 9:sine wave (fast ⊖ slow)		
		225 - 229	Shutter open		
		230 - 244	Strobe 10: burst (fast ⊖ slow)		
		245 - 255	Shutter open		
4	**Duration**	000-255	0 - 100%	(only affects to channel 3 - Strobe 1 025-064)	0
5	**Red**	000-255	0 - 100%		255
6	**Red Fine**	000-255	0 - 100%		255
7	**Green**	000-255	0 - 100%		255

17 CH - DIRECT MODE (RAW Balance)					
8	**Green Fine**	000-255	0 - 100%		255
9	**Blue**	000-255	0 - 100%		255
10	**Blue Fine**	000-255	0 - 100%		255
11	**Lime**	000-255	0 - 100%		255
12	**Lime Fine**	000-255	0 - 100%		255
13	**CTC** (affects RGBL)	000 - 004	RAW	according to CTC chart	0
		005-226	2000K-6500K linear in 20-21K steps (please see detailed CTC chart)		
		182-182	5600K		
		226-226	6500K		
		227-255	6621K-10.000K linear in 120-121K steps (please see detailed CTC chart)		
14	**Tint** (affects CTC and RGBL)	0	no function		128
		001-127	Magenta -> Neutral		
		128-128	Neutral		
		129-255	Neutral -> Green		
15	**Color Macro** (override RGBL,CTC)		please use color macros from ROXX color macro chart		0
16	**Color Macro Crossfade** (Transition Time between Color Macros)	000 - 005	no function		0
		006-105	0,1s - 10s (0,1s steps)		
		106-214	11s - 119s (1s steps)		
		215-244	2m - 4m50s (10s steps)		
		245-255	5m - 15m (1m steps)		
17	**Device Settings**			according to Device Settings DIRECT mode	0

10CH - HSI Mode (Color Calibrated)				
Ch.	Function	Value	Setting	Default
1	**Dimmer**	000-255	0 - 100%	0
2	**Dimmer Fine**	000-255	0 - 100%	0
3	**Shutter**	000 - 019	Shutter close	20
		020 - 024	Shutter open	
		025 - 064	Strobe 1 (fast ⊖ slow)	
		065 - 069	Shutter open	
		070 - 084	Strobe 2: opening pulse (fast ⊖ slow)	
		085 - 089	Shutter open	
		090 - 104	Strobe 3: closing pulse (fast ⊖ slow)	
		105 - 109	Shutter open	

10CH - HSI Mode (Color Calibrated)					
3	**Shutter**	110 - 124	Strobe 4: random strobe (fast ⊖ slow)		20
		125 - 129	Shutter open		
		130 - 144	Strobe 5: random opening pulse (fast ⊖ slow)		
		145 - 149	Shutter open		
		150 - 164	Strobe 6:random closing pulse (fast ⊖ slow)		
		165 - 169	Shutter open		
		170 - 184	Strobe 7: burst pulse (fast ⊖ slow)		
		185 - 189	Shutter open		
		190 - 204	Strobe 8: random burst pulse (fast ⊖ slow)		
		205 - 209	Shutter open		
		210 - 224	Strobe 9:sine wave (fast ⊖ slow)		
		225 - 229	Shutter open		
		230 - 244	Strobe 10: burst (fast ⊖ slow)		
		245 - 255	Shutter open		
4	**Hue**	000-255	0° (RED) Thru 360°		0
5	**Saturation**	000-255	0 - 100%		0
6	**CTC** (affects HUE and Saturation) --> CTC no effect if Saturation to 100%	000 - 004	5600K	according to CTC chart	0
		005-226	2000K-6500K linear in 20-21K steps (please see detailed CTC chart)		
		182-182	5600K		
		226-226	6500K		
		227-255	6621K-10.000K linear in 120-121K steps (please see detailed CTC chart)		
7	**Tint** (affects CTC, HUE and Saturation). --> Tint no effect if Saturation to 100%	0	no function		128
		001-127	Magenta -> Neutral		
		128-128	Neutral		
		129-255	Neutral -> Green		
8	**Color Macro** (override HUE/ SATURATION/CTC**)**		please use color macros from ROXX color macro chart		0
9	**Color Macro Crossfade** (Transition Time between Color Macros)	000 - 005	no function		0
		006-105	0,1s - 10s (0,1s steps)		
		106-214	11s - 119s (1s steps)		
		215-244	2m - 4m50s (10s steps)		
		245-255	5m - 15m (1m steps)		
10	**Device Settings**			according to Device Settings RGB mode	0

Device Setting RGB Modes				
Ch.	Settings	DMX Value	Function	remark
	Device Settings (please see remark *1)	000-005	No function	
		6	Display Backlight On (hold 3s)	
		7	Display Backlight Off (hold 3s)	
		8	Display Lock On (hold 3s)	
		9	Display Lock Off (hold 3s)	
		010-014	reserved / no function	
		15	DMX Fail - Blackout (hold 3s)	
		16	DMX Fail - Hold (hold 3s)	
		17	DMX Fail - Emergency Light (hold 3s)	
		018-022	reserved / no function	
		23	Linear Dimmer Curve (hold 3s)	
		24	Exponential Dimmer Curve (hold 3s)	
		25	Logarithmic Dimmer Curve (hold 3s)	
		26	S-Curve Dimmer Curve (hold 3s)	
		027-031	reserved / no function	
		32	Dimmer Response LED / fast (hold 3s)	
		33 reserved	reserved / no function	
		34	Dimmer Respononse Halogen / slow (hold 3s)	
		035-039	reserved / no function	
		40	Calibration - High CRI (Colors & CCT / hold 3s)	
		41	Calibration - Normal CRI (Colors & CCT / hold 3s)	
		042-046	reserved / no function	
		47	LED Frequency 800Hz (hold 3s)	
		48	LED Frequency 1200Hz (hold 3s)	
		49	LED Frequency 2000Hz (hold 3s)	
		50	LED Frequency 3600Hz (hold 3s)	
		51	LED Frequency 12kHz (hold 3s)	
		52	LED Frequency 25kHz (hold 3s)	
		053-057	reserved / no function	
		58	Fan Auto 1 (hold 3s)	
		59	Fan Auto 2 (hold 3s)	
		60	Fan Silent (hold 3s)	

Device Setting RGB Modes				
Ch.	Settings	DMX Value	Function	remark
	Device Settings (please see remark *1	61	Fan Studio (hold 3s)	
		62	Fan Off (hold 3s)	
		63	Fan High Power (hold 3s)	
		064-068	reserved / no function	
		69	Redshift On (hold 3s)	Redshift (affects only between 2700-3500K)
		70	Redshift Off (hold 3s)	
		071-244	reserved / no function	
		245	Snapshot (hold 3s)	
		246-248	reserved / no function	
		249	User Reset (hold 3s)	No Change of DMX Address and Mode! / Reset activates only if Shutter is set to DMX 250
		250	Factory Reset (hold 3s)	No Change of DMX Address and Mode! / Reset activates only if Shutter is set to DMX 250
		251 - 255 reserved	No Function	
remark*1: After adjustments please set the value back to 000 to avoid any disturbance by endless function call.				

Device Setting DIRECT Modes				
Ch.	Settings	DMX Value	Function	remark
	Device Settings (please see remark *1)	000-005	No function	
		6	Display Backlight On (hold 3s)	
		7	Display Backlight Off (hold 3s)	
		8	Display Lock On (hold 3s)	
		9	Display Lock Off (hold 3s)	
		010-014	reserved / no function	
		15	DMX Fail - Blackout (hold 3s)	
		16	DMX Fail - Hold (hold 3s)	
		17	DMX Fail - Emergency Light (hold 3s)	
		018-022	reserved / no function	
		23	Linear Dimmer Curve (hold 3s)	
		24	Exponential Dimmer Curve (hold 3s)	
		25	Logarithmic Dimmer Curve (hold 3s)	
		26	S-Curve Dimmer Curve (hold 3s)	
		027-031	reserved / no function	
		32	Dimmer Response LED / fast (hold 3s)	
		33 reserved	reserved / no function	
		34	Dimmer Respononse Halogen / slow (hold 3s)	
		035-039	reserved / no function	
		40	RAW Mode (hold 3s)	
		41	User Calibration (hold 3s)	
		042-046	reserved / no function	
		47	LED Frequency 800Hz (hold 3s)	
		48	LED Frequency 1200Hz (hold 3s)	
		49	LED Frequency 2000Hz (hold 3s)	
		50	LED Frequency 3600Hz (hold 3s)	
		51	LED Frequency 12kHz (hold 3s)	
		52	LED Frequency 25kHz (hold 3s)	
		053-057	reserved / no function	
		58	Fan Auto 1 (hold 3s)	
		59	Fan Auto 2 (hold 3s)	
		60	Fan Silent (hold 3s)	

Device Setting DIRECT Modes				
Ch.	Settings	DMX Value	Function	remark
	Device Settings (please see remark *1)	61	Fan Studio (hold 3s)	
		62	Fan Off (hold 3s)	
		63	Fan High Power (hold 3s)	
		064-068	reserved / no function	
		69	Redshift On (hold 3s)	Redshift (affects only between 2700-3500K)
		70	Redshift Off (hold 3s)	
		071-244	reserved / no function	
		245	Snapshot (hold 3s)	
		246-248	reserved / no function	
		249	User Reset (hold 3s)	No Change of DMX Address and Mode! / Reset activates only if Shutter is set to DMX 250
		250	Factory Reset (hold 3s)	No Change of DMX Address and Mode! / Reset activates only if Shutter is set to DMX 250
		251 - 255 reserved	No Function	
remark*1: After adjustments please set the value back to 000 to avoid any disturbance by endless function call.				

Color Macro Chart

Gels - Color Macros for DMX		
DMX value	Gel Name	Color Number
000-005	no function	
006-008	Red	100% Red LED
009-011	Fire	LEE 019
012-014	Medium Red	LEE 027
015-017	Primary Red	LEE 106
018-020	Med Amber	LEE 020
021-023	Dark Amber	LEE 022
024-026	Deep Amber	LEE 104
027-029	Orange	LEE 105
030-032	Deep Golden Amber	LEE 135
033-035	Yellow	LEE 101
036-038	Green	100% Green LED
039-041	Lime Green	LEE 088
042-044	Moss Green	LEE 089
045-047	LEE Green	LEE 121
048-050	Primary Green	LEE 139
051-053	Jas Green	LEE 738
054-056	Jade	LEE 323
057-059	Blue	100% Blue LED
060-062	Sky Blue	LEE 068
063-065	Tokyo Blue	LEE 071
066-068	Light Blue	LEE 118
069-071	Marine Blue	LEE 131
072-074	Med Blue	LEE 132
075-077	Congo Blue	LEE 181
078-080	Mikkel Blue	LEE 716
081-083	Rose Pink	LEE 002
084-086	Med Pink	LEE 036
087-089	Light Lavender	LEE 052
090-092	Lavender	LEE 058
093-095	Magenta	LEE 113
096-098	Mauve	LEE 126
099-101	Smokey Pink	LEE 127

Gels - Color Macros for DMX		
DMX value	Gel Name	Color Number
102-104	Special Med Lavender	LEE 343
105-107	Ultimate Violet	LEE 707
108-110	Magical Magenta	LEE 795
111-113	Chrysalis Pink	LEE 798
114-116	Specia KH Lavender	LEE 799
117-119	Bulb White	2700K / High CRI
120-122	Halogen White	3200K / High CRI
123-125	Neutral White	4200K / High CRI
126-128	Daylight White	5600K / High CRI
129-131	Cold White I	6000K / High CRI
132-134	Cold White II	6300K / High CRI
135-137	White (only if available)	100% White LED
138-140	Amber (only if available)	100% Amber LED
141-143	Lime (only if available)	100% Lime LED
144-146	Cyan (only if available)	100% Cyan LED
147-149	User Color 1	
150-152	User Color 2	
153-155	User Color 3	
156-158	User Color 4	
159-161	User Color 5	
162-164	Color Jumping stop	
165-209	Color Jumping speed slow ⊖ fast	color 1-37
210-255	Color fading speed slow ⊖ fast	color 1-37

Color Macro Chart

Gels - Color Macros for Standalone Mode		
Position	Gel Name	Color Number
1	Red	100% Red LED
2	Fire	LEE 019
3	Medium Red	LEE 027
4	Primary Red	LEE 106
5	Med Amber	LEE 020
6	Dark Amber	LEE 022
7	Deep Amber	LEE 104
8	Orange	LEE 105
9	Deep Golden Amber	LEE 135
10	Yellow	LEE 101
11	Green	100% Green LED
12	Lime Green	LEE 088
13	Moss Green	LEE 089
14	LEE Green	LEE 121
15	Primary Green	LEE 139
16	Jas Green	LEE 738
17	Jade	LEE 323
18	Blue	100% Blue LED
19	Sky Blue	LEE 068
20	Tokyo Blue	LEE 071
21	Light Blue	LEE 118
22	Marine Blue	LEE 131
23	Med Blue	LEE 132
24	Congo Blue	LEE 181
25	Mikkel Blue	LEE 716
26	Rose Pink	LEE 002
27	Med Pink	LEE 036
28	Light Lavender	LEE 052

Gels - Color Macros for Standalone Mode		
Position	Gel Name	Color Number
29	Lavender	LEE 058
30	Magenta	LEE 113
31	Mauve	LEE 126
32	Smokey Pink	LEE 127
33	Special Med Lavender	LEE 343
34	Ultimate Violet	LEE 707
35	Magical Magenta	LEE 795
36	Chrysalis Pink	LEE 798
37	Specia KH Lavender	LEE 799
38	Bulb White	2700K / High CRI
39	Halogen White	3200K / High CRI
40	Neutral White	4200K / High CRI
41	Daylight White	5600K / High CRI
42	Cold White I	6000 / High CRI
43	Cold White II	6300K / High CRI
44	White (only if available)	100% White LED
45	Amber (only if available)	100% Amber LED
46	Lime (only if available)	100% Lime LED
47	Cyan (only if available)	100% Cyan LED

CTC channel
DMX / Color temperature

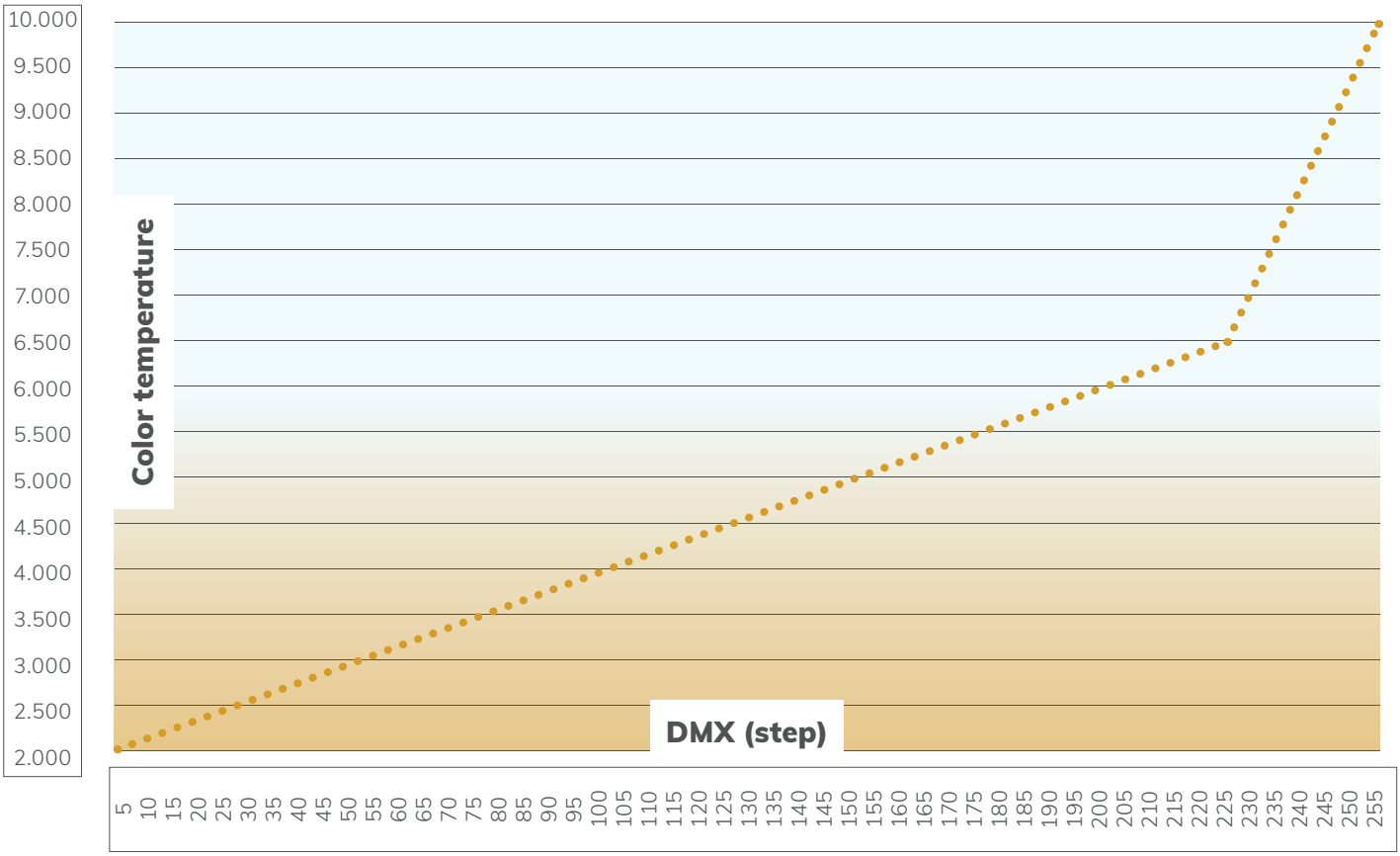

CTC-Chart

DMX (Step)	Color Temp (°K)
0	5600
1	5600
2	5600
3	5600
4	5600
5	2000
6	2020
7	2041
8	2061
9	2081
10	2102
11	2122
12	2143
13	2163
14	2183
15	2204
16	2224
17	2244
18	2265
19	2285
20	2305
21	2326
22	2346
23	2367
24	2387
25	2407
26	2428
27	2448
28	2468
29	2489
30	2509
31	2529
32	2550
33	2570
34	2590
35	2611
36	2631
37	2652
38	2672
39	2692
40	2713
41	2733
42	2753

DMX (Step)	Color Temp (°K)
43	2774
44	2794
45	2814
46	2835
47	2855
48	2876
49	2896
50	2916
51	2937
52	2957
53	2977
54	2998
55	3018
56	3038
57	3059
58	3079
59	3100
60	3120
61	3140
62	3161
63	3181
64	3201
65	3222
66	3242
67	3262
68	3283
69	3303
70	3324
71	3344
72	3364
73	3385
74	3405
75	3425
76	3446
77	3466
78	3486
79	3507
80	3527
81	3548
82	3568
83	3588
84	3609
85	3629

DMX (Step)	Color Temp (°K)
86	3649
87	3670
88	3690
89	3710
90	3731
91	3751
92	3771
93	3792
94	3812
95	3833
96	3853
97	3873
98	3894
99	3914
100	3934
101	3955
102	3975
103	3995
104	4016
105	4036
106	4057
107	4077
108	4097
109	4118
110	4138
111	4158
112	4179
113	4199
114	4219
115	4240
116	4260
117	4281
118	4301
119	4301
120	4342
121	4362
122	4382
123	4403
124	4423
125	4443
126	4464
127	4484
128	4505

DMX (Step)	Color Temp (°K)
129	4525
130	4545
131	4566
132	4586
133	4606
134	4627
135	4647
136	4667
137	4688
138	4708
139	4729
140	4749
141	4769
142	4790
143	4810
144	4830
145	4851
146	4871
147	4891
148	4912
149	4932
150	4952
151	4973
152	4993
153	5014
154	5034
155	5054
156	5075
157	5095
158	5115
159	5136
160	5156
161	5176
162	5197
163	5217
164	5238
165	5258
166	5278
167	5299
168	5319
169	5339
170	5360
171	5380

DMX (Step)	Color Temp (°K)
172	5400
173	5421
174	5441
175	5462
176	5482
177	5502
178	5523
179	5543
180	5563
181	5584
182	5604
183	5624
184	5645
185	5665
186	5686
187	5706
188	5726
189	5747
190	5767
191	5787
192	5808
193	5828
194	5848
195	5869
196	5889
197	5910
198	5930
199	5950
200	5971
201	5991
202	6011
203	6032
204	6052
205	6072
206	6093
207	6113
208	6133
209	6154
210	6174
211	6195
212	6215
213	6235
214	6256

DMX (Step)	Color Temp (°K)
215	6276
216	6296
217	6317
218	6337
219	6357
220	6378
221	6398
222	6419
223	6439
224	6459
225	6480
226	6500
227	6621
228	6741
229	6862
230	6983
231	7103
232	7224
233	7345
234	7466
235	7586
236	7707
237	7828
238	7948
239	8069
240	8190
241	8310
242	8431
243	8552
244	8672
245	8793
246	8914
247	9034
248	9155
249	9276
250	9397
251	9517
252	9638
253	9759
254	9879
255	10000

7.5 RDM Templates*

The ROXX NEO mini features support for various RDM functions. RDM (Remote Device Management) is a protocol enhancement to USITT DMX512 that allows bi-directional communication between the fixtures and the controller over a standard DMX line. This protocol will allow configuration, status monitoring and management. You will need a RDM controller to get control over the supported parameters. See the tables below for supported RDM features.

Label:	ROXX NEO mini
Model:	NEO mini
Manufacturer:	ROXX
ID:	6A6Ah
Device ID:	0139 xxxx

RDM functions

For easy identifying ROXX NEO mini mini mini during RDM process the unit will jump from white color to blue color every second.

PID	Function	Action	Values
0x00F0	DMX Start Adress	Set	001-512
0x00E0	DMX Personality	Set	DMX modes
0x00E1	DMX Slots	Read	Channels
0x8010	Fan Mode	Set	1= Auto 1 / 2= Auto 2 / 3= Silent / 4= Studio / 5= Fan Off / 6= Max. Power
0x0343 / 0x0344	Dimmer Curve	Set	1= Linear / 2= Exponential / 3= Logarithmic / 4= S-Curve
0x0345 / 0x0346	Dimmer Response	Set	1= LED / 2= Halogen
0x8032	Redshift	Set	0= Off / 1= On
0x8033	Color Calibration	Set	0= Normal CRI / 1= High CRI
0x8034	RAW Balance	Set	0= RAW / 1= User Calibration
0x8035	User Calibration- Red	Set	000-255
0x8036	User Calibration- Green	Set	000-255
0x8037	User Calibration- Blue	Set	000-255
0x8038	User Calibration- Lime	Set	000-255
0x0347 / 0x0348	LED Frequency (PWM)	Set	1= 800Hz / 2= 1200Hz / 3= 2000Hz / 4= 3600Hz / 5= 12kHz / 6= 25kHz
0x0142	Startup Mode	Set	0= DMX / 1= AUTO FX / 2= Editor / 3= Color Macro / 4= Quick Color / 5= Tunable White / 6= User Color / 7= Hold
0x0141	DMX Fail	Set	1= Hold / 2= Blackout / 3= Emergency
0x8012	Display Backlight	Set	0= Off / 1= On
0x8013	Display Auto Flip	Set	0= Off / 1= On
0x0641	Display Lock	Set	0= Off / 1= On
0x8018	CRMX Operating Mode	Set	0= RX / 1= TX
0x8019	CRMX Receive Reset	Set	0= No / 1= Yes
0x801A	CRMX Transmit Link	Set	0= No / 1= Yes
0x801B	CRMX Pass to DMX out	Set	0= No / 1= Yes
0x801C	Bluetooth	Set	0= Off / 1= On
0x801D	Bluetooth Link	Set	0= No / 1= Yes
0x8048	Protocol	Set	1=DMX / 2=Slave

0x801E	Factory Reset	Set	0= No / 1= Yes
0x801F	User Reset	Set	0= No / 1= Yes
0x00C0	Firmware Version	Read	n.a.
0x00D3	Serial Number	Read	n.a.
0x0400	Device Power on Time	Read	n.a.
0x0401	LED on Time	Read	n.a.
Sensor1	LED Temperature	Read	n.a.
Sensor2	Fan Speed	Read	n.a.

* For more and detailed information about the different reset options please refer to chapter "5.4.6.1 Reset functions"

Sensors

RDM enables various readouts for remote device monitoring. See the table below for sensors and sensor types. Please note: The RDM controller communicates with the fixtures to show only the available sensors for this fixture. The table is subject to change without notice.

Name	
Temperature	xx°C / xxx°F
Software Version	SW-Version
Errors	

8. TROUBLESHOOTING

Did you try turning the device off and on again?

Problem	Reason	Solution
Device is not responding.	No power.	Check cable connections and conform that power is switched on.
	Fuse defect.	Contact your qualified service technician / manufacturer.
Device has turned off.	Power failure or power was turned off.	Check power supply, fuse, connections, switches.
Device has stopped responding.	DMX cable correct?	Check cables.
	Wireless connection got cut off.	Check wireless transmitter and connection signals.
Device operates strangely.	DMX cable inverted (pins correct?)	Use a phase inverter or different cables.
	DMX cable terminated?	If not, install DMX termination at the end of the cable.
	Stand Alone program running?	Stop internal Stand Alone.
No Bluetooth Connectivity	No Bluetooth Connectivity	Please make sure your mobile device is inside the connectivity range of maximum 10-15m.
	Bluetooth is disabled at your mobile device	Please eanble Bluetooth at your mobile device settings.
	Mobile device has wrong Bluetooth Pin	Please use same Bluetooth Pin to connect ROXX. APP with the fixture. Current BLE Pin can be read out inside fixture´s wireless DMX settings.
	Mobile device has different Bluetooth connectivity	As only one Bluetooth connectiviy can be active, please make sure your mobile device is currently not connected to some other devices.
	Different mobile device is still conneced to the fixture	Please disconnect other mobile device from fixture.
	No Bluetooth Advertisment	Please send new BLE advertisement by enable "BLE Link" inside Settings of the fixture.
	Bluetooth module has hang up	Please enable Factory Reset at the fixture to re-start the Bluetooth module.

9. MANUFACTURER´S DECLARATION

Manufacturer´s Warranty & Limitations of Liability
Please find our warranty conditions and limitations of liability inside our manufacturer´s declaration at www.roxxlight.com/support

Requesting Warranty-Service
To request warranty service for your product, please contact:
ROXX GmbH,
Hansestr. 91, 51149 Köln
Email: info@roxxlight.com or the ROXX authorized reseller in your country, from where you purchased your product.

Correct Disposal of this product

This is for the European Union and European countries with electrical waste collection systems. When this label is shown on the product or brochure it means that the item cannot be disposed with household waste. In order to prevent damage to the environment or human health please do not dispose this product uncontrolled. Make sure to act responsible, recycle this product separately from other types of waste to enable lasting reuse of resources. Private users please contact the retailer where you purchased this product or your local authorities to find out where and how proper recycling of this item is possible. Business users please contact your supplier or check the terms and conditions of your purchasing contract. Make sure not to mix this product with other commercial waste.

FCC Statement

This device complies with Part 15 of the FCC Rules. Operation is subject to the following two conditions:
(1) This device may not cause harmful interference, and
(2) This device must accept any interference received, including interference that may cause undesired operation

NOTE: This equipment has been tested and found to comply with the limits for a Class B digital device, pursuant to Part 15 of the FCC Rules. These limits are designed to provide reasonable protection against harmful interference in a residential installation. This equipment generates, uses and can radiate radio frequency energy and, if not installed and used in accordance with the instructions, may cause harmful interference to radio communications. However, there is no guarantee that interference will not occur in a particular installation. If this equipment does cause harmful interference to radio or television reception, which can be determined by turning the equipment off and on, the user is encouraged to try to correct the interference by one or more of the following measures:

- Reorient or relocate the receiving antenna.
- Increase the separation between the equipment and receiver.
- Connect the equipment into an outlet on a circuit different from that to which the receiver is connected.
- Consult the dealer or an experienced radio/TV technician for help.

FCC Radiation Exposure Statement:
The equipment complies with FCC Radiation exposure limits set forth for uncontrolled environment. This equipment should be installed and operated with minimum distance 20cm between the radiator and your body.

CE Compliance

The equipment marketed by ROXX GmbH complies (where applicable) with the essential requirements and other specifications of the following Directives:

- 2014/53/EU (RED)
- 2014/30/EU (EMC)
- 2014/35/EU (LVD)
- 2011/65/EU (RoHS)

The complete EU- and UK-Declaration of Conformity can be found at www.roxxlight.com/support, or you can also request it at info@roxxlight.com

ROXX GmbH | Hansestr. 91 | 51149 Köln | www.roxxlight.com
Tel: +49 (0) 2203 20371-0 | Fax: +49 (0) 2203 20371-20