70mm

100mm

Beauty in every sound

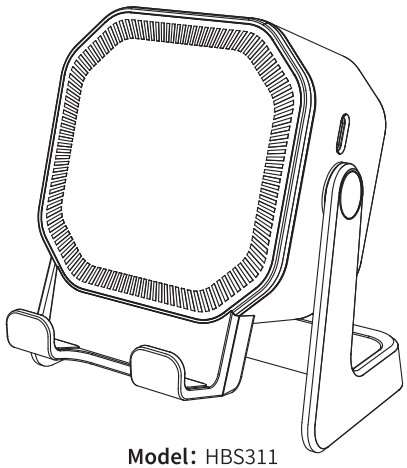

Model: HBS311

Wireless Speaker

OPERATION GUIDE

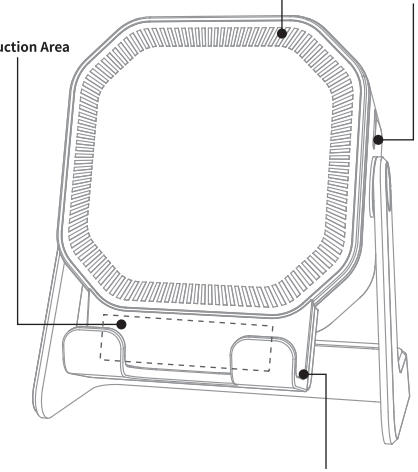

KNOB BUTTON

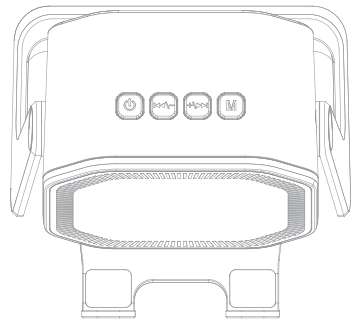

Single Click:
Volume Down

Long Press:
Previous Track

Single Click:
Volume Up

Long Press:
Next Track

Single Click:
Play/Pause

Long Press 3s:
Power On/Off

M

Single Click:
Switch the light mode

Double click:
Switch between Bluetooth devices

Long Press 3s:
Turn off the light

PARAMETER

1. Product name : Wireless Speaker
2. Function : BT/Induction/RGB
3. Wireless version : V5.4
4. Rated Power : 5W
5. Playing time : ≤ 8 hours
6. Transmission Distance : 10M
7. Horn size : 52 Circle 45 Magnet
8. Impedance : 4 ohm
9. Battery capacity : 1500mAh
10. Charging time : ~2 hours
11. Charging voltage : 0.5A DC5V/Type-C POWER
12. Frequency response : 80Hz-20KHz
13. Material : ABS+Silicone
14. Packing list

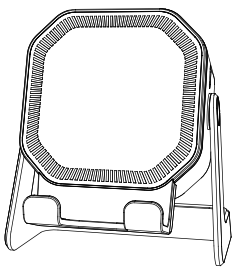

SPEAKER

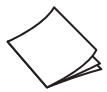

USER'S MANUAL

USB Cable

Ⅰ. WIRELESS MODE

1.Wireless Version:Wireless V5.4,support HSP,A2DP,AVRCP pro files,with voice prompts.Wireless pairing name:**HBS311**.

2.The blue color light will flash by 100ms,and the speaker is on pairing status,use the device to serach "**HBS311**" , then it will connect and pair automatically. If there is password needed,it is "0000" .After connected successfully,there will be voice prompts.The blue color light will flash by 1000ms when the speaker is in using.Once the device is connected successfully,it will be automatically paired when re-use next time.

Ⅱ. CHARGING MODE

1.Charge the speaker with the charging cable.(Wall charger is also available as long as it is 5V adapter).

2.The red color indicator light is on when it is on charging mode, and the light is off when fully charged.

Ⅲ. LOW BATTERY PROTECTION

1.When the battery is lower than 3.3v and lasts for 15s,the speaker will issue the warning, and when the battery is lower than 3.1v and lasts for 15s,the speaker will issue the warning and turn off itself.

TRANSPORT

The product is packed in a box for transportation under half-charged (50-90% power state).

During transportation, severe vibration, impact or extrusion should be prevented.

Prevent the sun and rain, and can be applied to ordinary transportation such as cars, trains, ships, and airplanes.

WARNINGS AND PRECAUTIONS WHEN USING THE PRODUCT

1. Never use abrasive cleaners to clean this product.
2. Do not let this product be heated or close to a fire source, such as a cooking stove.
3. Do not expose this product to direct sunlight for a long time.
4. Do not dispose of this product in the fire to avoid explosion.
5. Do not try to disassemble this product to make any modifications, because it does not contain any maintenance components.
6. Do not use this product in the rain.
7. If you do not plan to use this product for a long time, please store it in a dry environment, and charge the speaker at least once a month to extend its life.Avoid extreme temperatures and dust.

RoHS

Made in China

FCC WARNING

This device complies with part 15 of the FCC Rules. Operation is subject to the following two conditions: (1) This device may not cause harmful interference, and (2) this device must accept any interference received, including interference that may cause undesired operation.

Note: This equipment has been tested and found to comply with the limits for a Class B digital device, pursuant to part 15 of the FCC Rules. These limits are designed to provide reasonable protection against harmful interference in a residential installation. This equipment generates, uses and can radiate radio frequency energy and, if not installed and used in accordance with the instructions, may cause harmful interference to radio communications. However, there is no guarantee that interference will not occur in a particular installation. If this equipment does cause harmful interference to radio or television reception, which can be determined by turning the equipment off and on, the user is encouraged to try to correct the interference by one or more of the following measures:
—Reorient or relocate the receiving antenna.
—Increase the separation between the equipment and receiver.
—Connect the equipment into an outlet on a circuit different from that to which the receiver is connected.
—Consult the dealer or an experienced radio/TV technician for help.

Note: The Grantee is not responsible for any changes or modifications not expressly approved by the party responsible for compliance. such modifications could void the user's authority to operate the equipment.

The device has been evaluated to meet general RF exposure requirement.
This equipment complies with FCC's RF radiation exposure limits set forth for an uncontrolled environment. This device and its antenna(s) must not be co-located or conjunction with any other antenna or transmitter.
The device can be used in portable exposure conditions without restriction.