正基科技股份有限公司

SPECIFICATION

PRODUCT NAME：AP6275S

REVISION：2.2

DATE：Dec. 6th , 2022

Customer APPROVED	
Company	
Representative Signature	

PREPARED	REVIEW			APPROVED	DCC ISSUE
	PM	QA	ET		

正基科技股份有限公司

AMPAK Technology Inc.

AP6275S

Data Sheet

Address:
8F, No.15-1, Zhonghua Road, Hsinchu Industril Park, Hukou, Hsinchu, Taiwan, 30352
Website: http://www.ampak.com.tw/

Revision

Revision	Date	Description	Revised By
1.4	2020/09/21	--official release	Ares
1.5	2021/02/23	--Modify Recommended Reflow Profile	Richard
1.6	2021/05/26	--Modify Bluetooth Specification	Richard
1.7	2021/07/15	--Remove the feature of Real simultaneous dual-band	Richard
1.8	2021/07/23	--Updated 11 a/n/ac/ax low rate power	Ares
1.9	2021/10/06	--Updated 11ax MIMO Rx performance	Ares
2.0	2021/11/19	--Modify RF block diagram	Ares
2.1	2022/10/27	--Modify 5GHz supported channel	Richard
2.2	2022/12/06	--Modify Bluetooth Specification	Richard

Contents

Revision **1**
1. Introduction **2**
1.1 Overview 2
1.2 Product Features 3
2. General Specification **4**
2.1 General Specification 4
2.2 DC Characteristics 4
2.2.1 Absolute Maximum Ratings 4
2.2.2 Recommended Operating Rating 5
3. Wi-Fi RF Specification **6**
3.1 2.4GHz RF Specification 6
3.2 5GHz RF Specification 9
4. Bluetooth Specification **24**
4.1 Bluetooth Specification 24
5. Pin Definition **25**
5.1 Pin Outline 25
5.2 Pin Assignment 26
6. Dimensions **28**
6.1 Module Dimensions 28
6.2 Recommended footprint 29
7. External clock reference **30**
8. Host Interface Timing Diagram **31**
8.1 Power-up Sequence Timing Diagram 31
8.2 SDIO Interface Description 34
8.3 PCM Interface Description 41
8.4 UART Interface Description 47
9. Recommended Reflow Profile **49**
10. Package Information **50**
10.1 Label 50
10.2 Dimension 51
10.3 MSL Level / Storage Condition 53

1. Introduction

1.1 Overview

The AMPAK Technology® AP6275S is a fully Wi-Fi and Bluetooth functionalities module with seamless roaming capabilities and advance security, also it could interact with different vendors' 802.11a/b/g/n/ac/ax 2x2 Access Points with MIMO standard and can accomplish up to speed of 1200Mbps with dual stream in 802.1ax to connect the wireless LAN. Furthermore AP6275S included SDIO interface for Wi-Fi, UART/ PCM interface for Bluetooth.

In addition, this compact module is a total solution for a combination of Wi-Fi + BT technologies. The module is specifically developed for tablet, OTT box and portable devices.

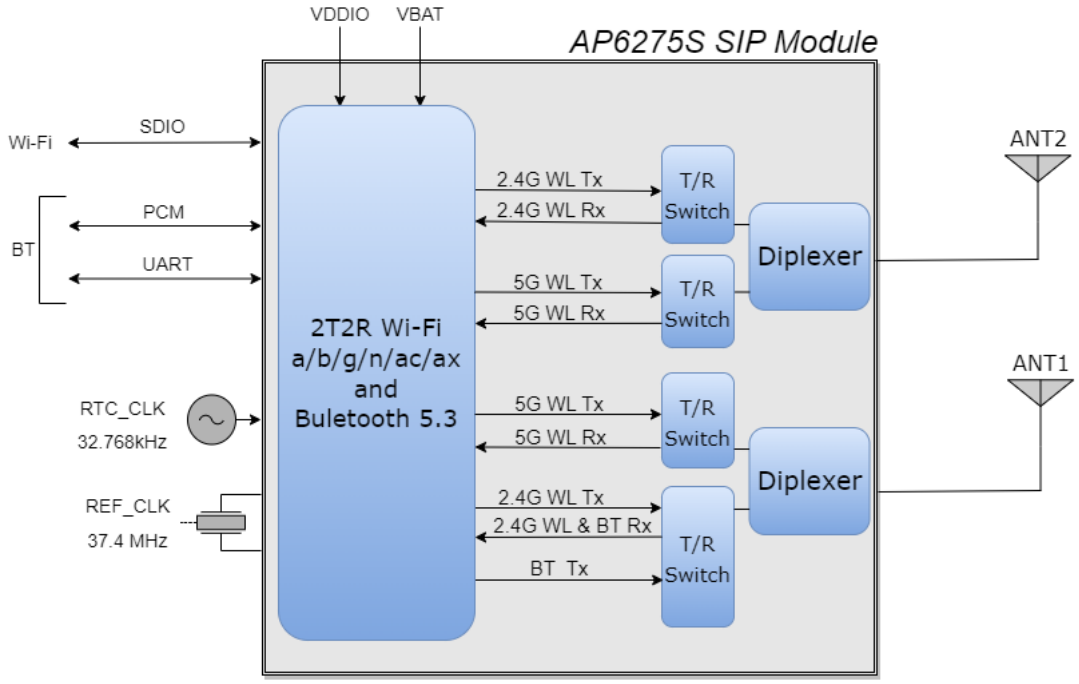

1.2 Product Features

IEEE 802.11 Key Feature

- Lead Free design which is compliant with ROHS requirements.
- TX and RX low-density parity check (LDPC) support for improved range and power efficiency.
- Dual-stream spatial multiplexing up to 1200 Mbps data rate.
- 20, 40, 80 MHz channels with optional SGI (1024 QAM modulation)
- Client MU-MIMO
- Supports standard SDIO v3.0, compatible with SDIO v2.0 HOST interfaces.

Bluetooth Key Feature

- BT host digital interface:
  - HCI UART (up to 4 Mbps)
  - PCM for audio data
- Complies with Bluetooth Core Specification Version 5.3 with provisions for supporting future specifications. With Bluetooth Class 1 or Class2 transmitter operation.
- Supports extended synchronous connections (eSCO), for enhanced voice quality by allowing for retransmission of dropped packets.
- Adaptive frequency hopping (AFH) for reducing radio frequency interference.

A simplified block diagram of the module is depicted in the figure above.

2. General Specification

2.1 General Specification

Model Name	AP6275S
Product Description	2T2R 802.11 a/b/g/n/ac/ax Wi-Fi + BT 5.3 Module
Dimension	L x W : 15 x 13 (typical) mm，H : 1.55 (Maximum) mm
WiFi Interface	Support SDIO V3.0/2.0
BT Interface	UART / PCM
Operating temperature	-30°C to 85°C
Storage temperature	-40°C to 125°C
Humidity	Operating Humidity 10% to 95% Non-Condensing

Note: The optimal RF performance specified in the data sheet, however, is guaranteed only -10 °C to +55 °C and 3.2V < VBAT < 3.8V without derating performance.

2.2 DC Characteristics

2.2.1 Absolute Maximum Ratings

Symbol	Description	Min.	Max.	Unit
VBAT	Input supply Voltage	-0.5	4.5	V
VDDIO	Digital/Bluetooth/SDIO/ I/O Voltage	-0.5	2.07	V

Extreme caution must be exercised to prevent electrostatic discharge (ESD) damage.

Symbol	Condition	Minimum ESD Rating	Unit
ESD_HAND_HBM	Human body model contact discharge per JEDEC EID/JESD22-A114	1	kV
ESD_HAND_CDM	Charged device model contact discharge per JEDEC EIA/JESD22-C101	300	V

2.2.2 Recommended Operating Rating

The module requires two power supplies: VBAT and VDDIO.

Voltage rails	Min.	Typ.	Max.	Unit
VBAT	3.0	3.3	3.8	V
VDDIO	1.68	1.8	1.98	V

VBAT current consumption 1200mA(Peak), when VBAT = 3.3V

The module requires two power supplies: other Digital I/O Pins.

For VDDIO=1.8V	Min.	Max.	Unit
Input high voltage	0.65 x VDDIO	NA	V
Input low voltage	NA	0.4 x VDDIO	V
Output high voltage @ 2mA	VDDIO – 0.4	NA	V
Output low voltage @ 2mA	NA	0.4	V

3. Wi-Fi RF Specification

3.1 2.4GHz RF Specification

Conditions : VBAT=3.3V ; VDDIO=1.8V ; Temp:25°C

Feature	Description
WLAN Standard	IEEE 802.11 b/g/n/ax & Wi-Fi compliant
Frequency Range	2.400 GHz ~ 2.4835 GHz (2.4GHz ISM Band)
Number of Channels	2.4GHz：Ch1 ~ Ch13
Modulation	802.11b : DQPSK、DBPSK、CCK 802.11g/n : OFDM /64-QAM、16-QAM、QPSK、BPSK 802.11ax : OFDMA /256-QAM、64-QAM、16-QAM、QPSK、BPSK

Output Power , tolerance ± 1.5 dB

The transmit EVM quality & spectrum mask are compliant with IEEE 802.11 standard

802.11b	**1Mbps**	**2Mbps**	**5.5Mbps**	**11Mbps**	
	19.5	19.5	19.5	19.5	
802.11g	**6、9Mbps**	**12、18Mbps**	**24Mbps**	**36Mbps**	**48Mbps**
	19.5	19.5	18.5	18.5	18
	54Mbps				
	18				
802.11n 20MHz	**MCS0~2**	**MCS3**	**MCS4**	**MCS5**	**MCS6**
	19.5	18.5	18.5	18	18
	MCS7				
	17.5				
802.11ax 20MHz	**HE0~2**	**HE3**	**HE4**	**HE5**	**HE6**
	19.5	**18.5**	**18.5**	**18**	**18**
	HE7	**HE8**	**HE9**		
	17.5	**16.5**	**16.5**		

	Dara rate	Tones	Spec.(dBm)	Dara rate	Tones	Spec.(dBm)
802.11ax_20MHz SISO_OFDMA	**HE0**	**26**	**19**	**HE6**	**26**	**17.5**
		52	**19**		**52**	**17.5**
		106	**19**		**106**	**17.5**
		242	**19**		**242**	**17.5**
	HE1~2	**26**	**18.5**	**HE7**	**26**	**17.5**
		52	**18.5**		**52**	**17.5**
		106	**18.5**		**106**	**17.5**

		242	18.5		242	17.5
	HE3	26	18	HE8	26	16.5
		52	18		52	16.5
		106	18		106	16.5
		242	18		242	16.5

802.11ax_20MHz SISO_OFDMA	HE4	26	18	HE9	26	16.5
		52	18		52	16.5
		106	18		106	16.5
		242	18		242	16.5
	HE5	26	17.5			
		52	17.5			
		106	17.5			
		242	17.5			

Note: The specifications of RF output power are subject to change to fulfill the safety regulation and requirements in end-user product.

Sensitivity, tolerance ± 2 dB

CCK modulation PER ≦ 8%、OFDM modulation PER ≦ 10%

802.11b	Data Rate	Spec.(dBm)		
	1Mbps	-98		
	2Mbps	-93		
	5.5Mbps	-91		
	11Mbps	-89		
802.11g SISO	Data Rate	Spec.(dBm)	Data Rate	Spec.(dBm)
	6Mbps	-93	24Mbps	-85
	9Mbps	-92	36Mbps	-82
	12Mbps	-91	48Mbps	-78
	18Mbps	-88	54Mbps	-76
802.11g MIMO	Data Rate	Spec.(dBm)	Data Rate	Spec.(dBm)
	6Mbps	-95	24Mbps	-87
	9Mbps	-94	36Mbps	-84
	12Mbps	-93	48Mbps	-81
	18Mbps	-90	54Mbps	-78
802.11n_20MHz SISO	Data Rate	Spec.(dBm)	Data Rate	Spec.(dBm)
	MCS0	-93	MCS4	-81.5
	MCS1	-89	MCS5	-79
	MCS2	-87	MCS6	-76
	MCS3	-84	MCS7	-76

802.11n_20MHz MIMO	Data Rate	Spec.(dBm)	Data Rate	Spec.(dBm)
	MCS0	-93	MCS5	-80
	MCS1	-92	MCS6	-78
	MCS2	-90	MCS7	-76
	MCS3	-87	MCS8	-92.5
	MCS4	-83	MCS15	-75
802.11ax_20MHz SISO	Data Rate	Spec.(dBm)	Data Rate	Spec.(dBm)
	HE0	-93	HE6	-76
	HE1	-89	HE7	-76
	HE2	-87	HE8	-72
	HE3	-84	HE9	-70
	HE4	-81.5		
	HE5	-79		
802.11ax_20MHz MIMO	Data Rate	Spec.(dBm)	Data Rate	Spec.(dBm)
	HE0	-92	HE6	-75
	HE1	-88	HE7	-75
	HE2	-86	HE8	-71
	HE3	-83	HE9	-69
	HE4	-81		
	HE5	-78		
Maximum Input Level	802.11b : -10 dBm			
	802.11g/n/ax : -20 dBm			

3.2 5GHz RF Specification

Conditions : VBAT=3.3V ; VDDIO=1.8V ; Temp:25°C

Feature	Description
WLAN Standard	IEEE 802.11a/n/ac/ax & Wi-Fi compliant
Frequency Range	5.15~5.35GHz、5.47~5.725GHz、5.725~5.85GHz (5GHz UNII Band)
Number of Channels	5.15~5.35GHz：Ch36 ~ Ch64 5.47~5.725GHz：Ch100 ~ Ch144 5.725~5.85GHz：Ch149 ~ Ch165
Modulation	802.11a : OFDM /64-QAM、16-QAM、QPSK、BPSK 802.11n : OFDM /64-QAM、16-QAM、QPSK、BPSK 802.11ac : OFDM /256-QAM、64-QAM、16-QAM、QPSK、BPSK 802.11ax : OFDMA /1024-QAM、256-QAM、64-QAM、16-QAM、QPSK、BPSK

Output Power , tolerance ± 2 dB

The transmit EVM quality & spectrum mask are compliant with IEEE 802.11 standard

802.11a	**Frequency (MHz)**	**6~9Mbps**	**12~18Mbps**	**24Mbps**	**36Mbps**
	5150~5350	15.5	15.5	15.5	15.5
	5470~5725	15.5	15.5	15.5	15.5
	5725~5845	15.5	15.5	15.5	15.5
	Frequency (MHz)	**48Mbps**	**54Mbps**		
	5150~5350	15.5	15.5		
	5470~5725	15.5	15.5		
	5725~5845	15.5	15.5		
802.11n 20MHz	**Frequency (MHz)**	**MCS0~2**	**MCS3**	**MCS4**	**MCS5**
	5150~5350	15.5	15.5	15.5	15.5
	5470~5725	15.5	15.5	15.5	15.5
	5725~5845	15.5	15.5	15.5	15.5
	Frequency (MHz)	**MCS6**	**MCS7**		
	5150~5350	15.5	14.5		
	5470~5725	15.5	14.5		
	5725~5845	15.5	14.5		

802.11n 40MHz	Frequency (MHz)	MCS0~2	MCS3	MCS4	MCS5
	5150~5350	15.5	15.5	15.5	15.5
	5470~5725	15	15	15	15
	5725~5845	15	15	15	15
	Frequency (MHz)	MCS6	MCS7		
	5150~5350	15	15		
	5470~5725	14.5	14.5		
	5725~5845	14.5	14.5		
802.11ac 20MHz	Frequency (MHz)	MCS0~2	MCS3	MCS4	MCS5
	5150~5350	15.5	15.5	15.5	15.5
	5470~5725	15.5	15.5	15.5	15.5
	5725~5845	15.5	15.5	15.5	15.5
	Frequency (MHz)	MCS6	MCS7	MCS8	
	5150~5350	15.5	14.5	12.5	
	5470~5725	15.5	14.5	12.5	
	5725~5845	15.5	14.5	12.5	
802.11ac 40MHz	Frequency (MHz)	MCS0~2	MCS3	MCS4	MCS5
	5150~5350	15.5	15.5	15.5	15.5
	5470~5725	15	15	15	15
	5725~5845	15	15	15	15
	Frequency (MHz)	MCS6	MCS7	MCS8	MCS9
	5150~5350	15	15	13.5	11
	5470~5725	14.5	14.5	13	10
	5725~5845	14.5	14.5	13	10
802.11ac 80MHz	Frequency (MHz)	MCS0~2	MCS3	MCS4	MCS5
	5150~5350	15	15	15	15
	5470~5725	15	15	15	15
	5725~5845	15	15	15	15
	Frequency (MHz)	MCS6	MCS7	MCS8	MCS9
	5150~5350	14.5	14.5	11	11
	5470~5725	14.5	14.5	10	10
	5725~5845	14.5	14.5	10	10
802.11ax 20MHz	Frequency (MHz)	HE0~2	HE3	HE4	HE5
	5150~5350	15.5	15.5	15.5	15.5
	5470~5725	15.5	15.5	15.5	15.5
	5725~5845	15.5	15.5	15.5	15.5

802.11ax 20MHz	Frequency (MHz)	HE6	HE7	HE8	HE9
	5150~5350	15.5	14.5	12.5	12.5
	5470~5725	15.5	14.5	12.5	12.5
	5725~5845	15.5	14.5	12.5	12.5
	Frequency (MHz)	HE10	HE11		
	5150~5350	10.5	10.5		
	5470~5725	10	10		
	5725~5845	10	10		
802.11ax 40MHz	Frequency (MHz)	HE0~2	HE3	HE4	HE5
	5150~5350	15.5	15.5	15.5	15.5
	5470~5725	15	15	15	15
	5725~5845	15	15	15	15
	Frequency (MHz)	HE6	HE7	HE8	HE9
	5150~5350	15	15	13.5	11
	5470~5725	14.5	14.5	13	10
	5725~5845	14.5	14.5	13	10
	Frequency (MHz)	HE10	HE11		
	5150~5350	9	9		
	5470~5725	8	8		
	5725~5845	8	8		
802.11ax 80MHz	Frequency (MHz)	HE0~2	HE3	HE4	HE5
	5150~5350	15	15	15	15
	5470~5725	15	15	15	15
	5725~5845	15	15	15	15
	Frequency (MHz)	HE6	HE7	HE8	HE9
	5150~5350	14.5	14.5	11	11
	5470~5725	14.5	14.5	10	10
	5725~5845	14.5	14.5	10	10
	Frequency (MHz)	HE10	HE11		
	5150~5350	9	9		
	5470~5725	9	9		
	5725~5845	9	9		
Note: The specifications of RF output power are subject to change to fulfill the safety regulation and requirements in end-user product.					

	Dara rate	Tones	Frequency	Spec.(dBm)
802.11ax_20MHz SISO_OFDMA	HE0	26	5150~5350	15.5
			5470~5725	15.5
			5725~5845	15.5
		52	5150~5350	15.5
			5470~5725	15.5
			5725~5845	15.5
		106	5150~5350	15.5
			5470~5725	15.5
			5725~5845	15.5
		242	5150~5350	14.5
			5470~5725	14
			5725~5845	14
	HE1~2	26	5150~5350	15.5
			5470~5725	15.5
			5725~5845	15.5
		52	5150~5350	15.5
			5470~5725	15.5
			5725~5845	15.5
		106	5150~5350	15.5
			5470~5725	15.5
			5725~5845	15.5
		242	5150~5350	14.5
			5470~5725	14
			5725~5845	14
	HE3~4	26	5150~5350	15.5
			5470~5725	15.5
			5725~5845	15.5
		52	5150~5350	15.5
			5470~5725	15.5
			5725~5845	15.5
		106	5150~5350	15.5
			5470~5725	15.5
			5725~5845	15.5
		242	5150~5350	14.5
			5470~5725	14
			5725~5845	14

	HE5~7	26	5150~5350	14.5
			5470~5725	14.5
			5725~5845	14.5
		52	5150~5350	14.5
			5470~5725	14.5
			5725~5845	14.5
		106	5150~5350	14.5
			5470~5725	14.5
			5725~5845	14.5
		242	5150~5350	14.5
			5470~5725	14
			5725~5845	14
	HE8~9	26	5150~5350	12.5
			5470~5725	12.5
			5725~5845	12.5
		52	5150~5350	12.5
			5470~5725	12.5
			5725~5845	12.5
		106	5150~5350	12.5
			5470~5725	12.5
			5725~5845	12.5
		242	5150~5350	12.5
			5470~5725	12.5
			5725~5845	12.5
	HE10~11	242	5150~5350	10
			5470~5725	9.5
			5725~5845	9.5

	Dara rate	Tones	Frequency	Spec.(dBm)
802.11ax_40MHz SISO_OFDMA	HE0	26	5150~5350	15.5
			5470~5725	15
			5725~5845	15
		52	5150~5350	15.5
			5470~5725	15
			5725~5845	15
		106	5150~5350	15.5
			5470~5725	15
			5725~5845	15
		242	5150~5350	15.5
			5470~5725	15
			5725~5845	15
		484	5150~5350	14.5
			5470~5725	14.5
			5725~5845	14.5
	HE1~2	26	5150~5350	15.5
			5470~5725	15
			5725~5845	15
		52	5150~5350	15.5
			5470~5725	15
			5725~5845	15
		106	5150~5350	15.5
			5470~5725	15
			5725~5845	15
		242	5150~5350	15.5
			5470~5725	15
			5725~5845	15
		484	5150~5350	14.5
			5470~5725	14.5
			5725~5845	14.5

	HE3~4	26	5150~5350	15.5
			5470~5725	15
			5725~5845	15
		52	5150~5350	15.5
			5470~5725	15
			5725~5845	15
		106	5150~5350	15.5
			5470~5725	15
			5725~5845	15
		242	5150~5350	15.5
			5470~5725	15
			5725~5845	15
		484	5150~5350	14.5
			5470~5725	14.5
			5725~5845	14.5
	HE5~7	26	5150~5350	15.5
			5470~5725	15
			5725~5845	15
		52	5150~5350	15.5
			5470~5725	15
			5725~5845	15
		106	5150~5350	15.5
			5470~5725	15
			5725~5845	15
		242	5150~5350	15.5
			5470~5725	15
			5725~5845	15
		484	5150~5350	14.5
			5470~5725	14.5
			5725~5845	14.5
	HE8~9	26	5150~5350	12
			5470~5725	12
			5725~5845	12
		52	5150~5350	12
			5470~5725	12
			5725~5845	12
		106	5150~5350	12

			5470~5725	12
			5725~5845	12
		242	5150~5350	12
			5470~5725	12
			5725~5845	12
		484	5150~5350	12
			5470~5725	12
			5725~5845	12
	HE10~11	242	5150~5350	10.5
			5470~5725	10
			5725~5845	10
		484	5150~5350	9.5
			5470~5725	9
			5725~5845	9

	Dara rate	Tones	Frequency	Spec.(dBm)
802.11ax_80MHz SISO_OFDMA	HE0	26	5150~5350	15.5
			5470~5725	15
			5725~5845	15
		52	5150~5350	15.5
			5470~5725	15
			5725~5845	15
		106	5150~5350	15.5
			5470~5725	15
			5725~5845	15
		242	5150~5350	15.5
			5470~5725	15
			5725~5845	15
		484	5150~5350	15.5
			5470~5725	15
			5725~5845	15
		996	5150~5350	15.5
			5470~5725	15
			5725~5845	15
	HE1~2	26	5150~5350	15.5
			5470~5725	15
			5725~5845	15
		52	5150~5350	15.5
			5470~5725	15
			5725~5845	15
		106	5150~5350	15.5
			5470~5725	15
			5725~5845	15
		242	5150~5350	15.5
			5470~5725	15
			5725~5845	15
		484	5150~5350	15.5
			5470~5725	15
			5725~5845	15
		996	5150~5350	15.5
			5470~5725	15
			5725~5845	15

	HE3~4	26	5150~5350	15.5
			5470~5725	15
			5725~5845	15
		52	5150~5350	15.5
			5470~5725	15
			5725~5845	15
		106	5150~5350	15.5
			5470~5725	15
			5725~5845	15
		242	5150~5350	15.5
			5470~5725	15
			5725~5845	15
		484	5150~5350	15.5
			5470~5725	15
			5725~5845	15
		996	5150~5350	15.5
			5470~5725	15
			5725~5845	15
	HE5~7	26	5150~5350	15.5
			5470~5725	15
			5725~5845	15
		52	5150~5350	15.5
			5470~5725	15
			5725~5845	15
		106	5150~5350	15.5
			5470~5725	15
			5725~5845	15
		242	5150~5350	15.5
			5470~5725	15
			5725~5845	15
		484	5150~5350	15.5
			5470~5725	15
			5725~5845	15
		996	5150~5350	14.5
			5470~5725	14.5
			5725~5845	14.5

	HE8~9	26	5150~5350	12.5
			5470~5725	12.5
			5725~5845	12.5
		52	5150~5350	12.5
			5470~5725	12.5
			5725~5845	12.5
		106	5150~5350	12.5
			5470~5725	12.5
			5725~5845	12.5
		242	5150~5350	12
			5470~5725	12
			5725~5845	12
		484	5150~5350	12
			5470~5725	12
			5725~5845	12
		996	5150~5350	12
			5470~5725	12
			5725~5845	12
	HE10~11	242	5150~5350	10
			5470~5725	9.5
			5725~5845	9.5
		484	5150~5350	10
			5470~5725	9.5
			5725~5845	9.5
		996	5150~5350	9
			5470~5725	9
			5725~5845	9

Sensitivity, tolerance ± 1.5 dB CCK modulation PER ≦ 8%、OFDM modulation PER ≦ 10%				
802.11a SISO	Data Rate	Spec.(dBm)	Data Rate	Spec.(dBm)
	6Mbps	-90.5	24Mbps	-83
	9Mbps	-90	36Mbps	-80
	12Mbps	-88	48Mbps	-75
	18Mbps	-86	54Mbps	-73
802.11a MIMO	Data Rate	Spec.(dBm)	Data Rate	Spec.(dBm)
	6Mbps	-92	24Mbps	-86
	9Mbps	-91	36Mbps	-83
	12Mbps	-90	48Mbps	-78
	18Mbps	-89	54Mbps	-77
802.11n_20MHz SISO	Data Rate	Spec.(dBm)	Data Rate	Spec.(dBm)
	MCS0	-90	MCS4	-79
	MCS1	-88	MCS5	-76
	MCS2	-86	MCS6	-73
	MCS3	-83	MCS7	-72
802.11n_20MHz MIMO	Data Rate	Spec.(dBm)	Data Rate	Spec.(dBm)
	MCS0	-92	MCS5	-78
	MCS1	-91	MCS6	-76
	MCS2	-89	MCS7	-75
	MCS3	-86	MCS8	-90
	MCS4	-82	MCS15	-71
802.11n_40MHz SISO	Data Rate	Spec.(dBm)	Data Rate	Spec.(dBm)
	MCS0	-88	MCS4	-77
	MCS1	-86	MCS5	-72
	MCS2	-83	MCS6	-70
	MCS3	-80	MCS7	-69
802.11n_40MHz MIMO	Data Rate	Spec.(dBm)	Data Rate	Spec.(dBm)
	MCS0	-88	MCS5	-75
	MCS1	-88	MCS6	-73
	MCS2	-86	MCS7	-72
	MCS3	-83	MCS8	-87
	MCS4	-79	MCS15	-68

802.11ac_20MHz SISO	Data Rate	Spec.(dBm)	Data Rate	Spec.(dBm)
	MCS0	-90	MCS5	-75
	MCS1	-88	MCS6	-73
	MCS2	-86	MCS7	-70
	MCS3	-83	MCS8	-68
	MCS4	-79		
802.11ac_20MHz MIMO	Data Rate	Spec.(dBm)	Data Rate	Spec.(dBm)
	MCS0,NSS=1	-92	MCS6,NSS=1	-76
	MCS1,NSS=1	-91	MCS7,NSS=1	-75
	MCS2,NSS=1	-88	MCS8,NSS=1	-72
	MCS3,NSS=1	-85	MCS0,NSS=2	-89
	MCS4,NSS=1	-82	MCS8,NSS=2	-67
	MCS5,NSS=1	-77		
802.11ac_40MHz SISO	Data Rate	Spec.(dBm)	Data Rate	Spec.(dBm)
	MCS0	-88	MCS5	-72
	MCS1	-86	MCS6	-70
	MCS2	-83	MCS7	-69
	MCS3	-80	MCS8	-65
	MCS4	-76	MCS9	-64
802.11ac_40MHz MIMO	Data Rate	Spec.(dBm)	Data Rate	Spec.(dBm)
	MCS0,NSS=1	-90	MCS6,NSS=1	-73
	MCS1,NSS=1	-88	MCS7,NSS=1	-72
	MCS2,NSS=1	-86	MCS8,NSS=1	-68
	MCS3,NSS=1	-82	MCS9,NSS=1	-66
	MCS4,NSS=1	-79	MCS0,NSS=2	-87
	MCS5,NSS=1	-77	MCS9,NSS=2	-63
802.11ac_80MHz SISO	Data Rate	Spec.(dBm)	Data Rate	Spec.(dBm)
	MCS0	-85	MCS5	-68
	MCS1	-82	MCS6	-67
	MCS2	-79	MCS7	-65
	MCS3	-76	MCS8	-62
	MCS4	-73	MCS9	-61

802.11ac_80MHz MIMO	Data Rate	Spec.(dBm)	Data Rate	Spec.(dBm)
	MCS0,NSS=1	-87	MCS6,NSS=1	-70
	MCS1,NSS=1	-85	MCS7,NSS=1	-68
	MCS2,NSS=1	-82	MCS8,NSS=1	-66
	MCS3,NSS=1	-79	MCS9,NSS=1	-63
	MCS4,NSS=1	-76	MCS0,NSS=2	-84
	MCS5,NSS=1	-71	MCS9,NSS=2	-60
802.11ax_20MHz SISO	Data Rate	Spec.(dBm)	Data Rate	Spec.(dBm)
	HE0	-90	HE6	-73
	HE1	-88	HE7	-70
	HE2	-86	HE8	-68
	HE3	-83	HE9	-64
	HE4	-79	HE10	-59
	HE5	-75	HE11	-57
802.11ax_20MHz MIMO	Data Rate	Spec.(dBm)	Data Rate	Spec.(dBm)
	HE0	-90	HE6	-73
	HE1	-88	HE7	-70
	HE2	-86	HE8	-68
	HE3	-83	HE9	-64
	HE4	-79	HE10	-59
	HE5	-75	HE11	-56
802.11ax_40MHz SISO	Data Rate	Spec.(dBm)	Data Rate	Spec.(dBm)
	HE0	-88	HE6	-70
	HE1	-86	HE7	-69
	HE2	-83	HE8	-65
	HE3	-80	HE9	-64
	HE4	-76	HE10	-60
	HE5	-72	HE11	-55
802.11ax_40MHz MIMO	Data Rate	Spec.(dBm)	Data Rate	Spec.(dBm)
	HE0	-87	HE6	-70
	HE1	-86	HE7	-69
	HE2	-83	HE8	-65
	HE3	-80	HE9	-64
	HE4	-76	HE10	-60
	HE5	-72	HE11	-55

802.11ax_80MHz SISO	Data Rate	Spec.(dBm)	Data Rate	Spec.(dBm)
	HE0	-85	HE6	-67
	HE1	-82	HE7	-65
	HE2	-79	HE8	-62
	HE3	-76	HE9	-61
	HE4	-73	HE10	-57
	HE5	-68	HE11	-53
802.11ax_80MHz MIMO	Data Rate	Spec.(dBm)	Data Rate	Spec.(dBm)
	HE0	-84	HE6	-67
	HE1	-82	HE7	-65
	HE2	-79	HE8	-62
	HE3	-76	HE9	-61
	HE4	-73	HE10	-57
	HE5	-68	HE11	-52
Maximum Input Level	802.11a/n/ac/ax : -30 dBm			

4. Bluetooth Specification

4.1 Bluetooth Specification

Conditions : VBAT=3.3V ; VDDIO=1.8V ; Temp:25°C

Feature	Description
General Specification	
Bluetooth Standard	BDR、EDR(2Mbps & 3Mbps)、LE(1/2Mbps)、LELR(128/512Kbps)
Host Interface	UART
Frequency Band	2402 MHz ~ 2480 MHz
Number of Channels	79 channels for classic、40 channels for BLE
Modulation	GFSK, π/4-DQPSK, 8DPSK
RF Specification	
Output Power , tolerance ± 1.5 dB	
	CL1 (dBm)
BDR Output Power	8
EDR Output Power	6
BLE Output Power	7
Sensitivity, tolerance ± 1.5 dB	
Sensitivity @ BER=0.1% for GFSK (1Mbps)	-88 dBm
Sensitivity @ BER=0.01% for π/4-DQPSK (2Mbps)	-91 dBm
Sensitivity @ BER=0.01% for 8DPSK (3Mbps)	-85 dBm
Sensitivity @ PER=30.8% for LE (1Mbps)	-90 dBm
Sensitivity @ PER=30.8% for 2LE (2Mbps)	-91dBm
Maximum Input Level	GFSK (1Mbps):-20dBm
	π/4-DQPSK (2Mbps) :-20dBm
	8DPSK (3Mbps) :-20dBm

Note*：The Bluetooth BDR output power is able to be configured by firmware (hcd file).

5. Pin Definition

5.1 Pin Outline

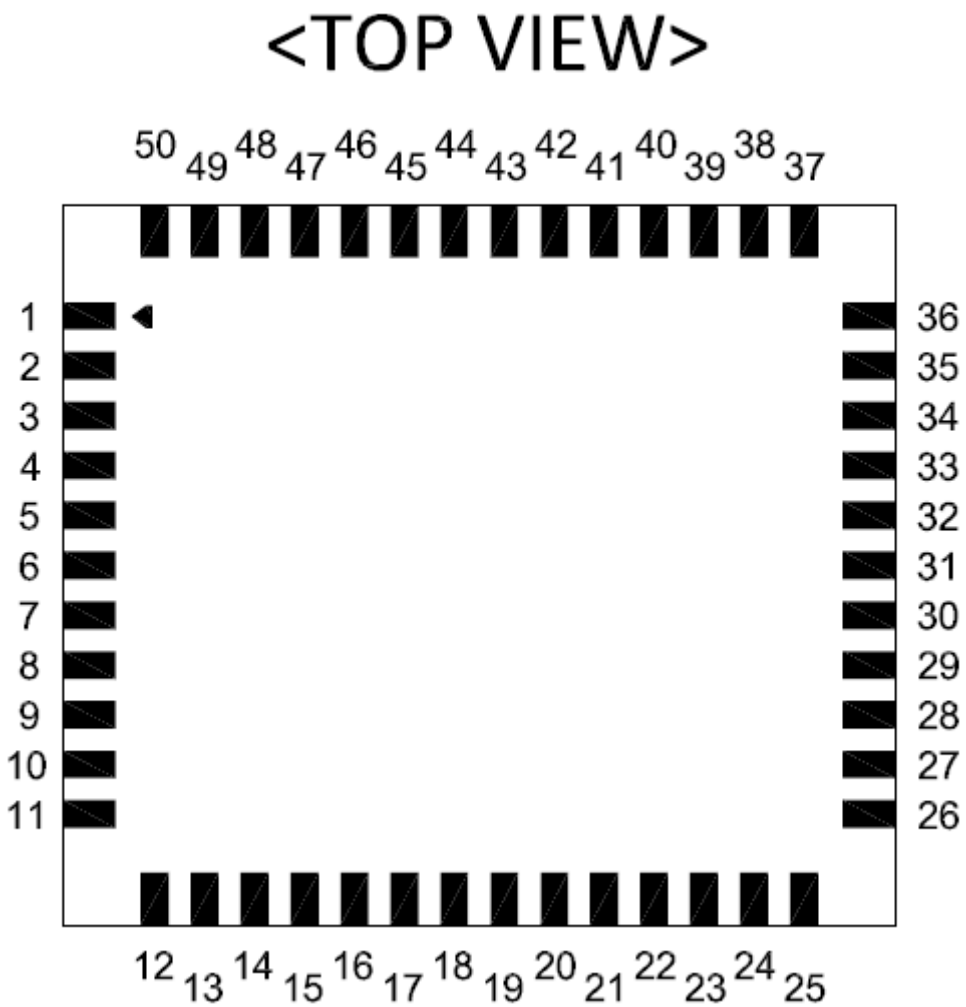

5.2 Pin Assignment

NO	Name	Type	Description
1	GND	—	Ground connections
2	WL_ANT0	I/O	RF I/O port0
3	GND	—	Ground connections
4	GND	—	Ground connections
5	GND	—	Ground connections
6	GND	—	Ground connections
7	GND	—	Ground connections
8	GND	—	Ground connections
9	WL_ANT1	I/O	RF I/O port1
10	GND	—	Ground connections
11	GND	—	Ground connections
12	NC	—	Floating (Don't connected to ground)
13	XTAL_IN	I	External Crystal in/ Single clock source in
14	XTAL_OUT	O	External Crystal out
15	WL_REG_ON	I	Low asserting reset for WiFi core
16	WL_HOST_WAKE/WL_GPIO_0	O	WLAN to wake-up HOST and WL_GPIO_0
17	SDIO_DATA_CMD	I/O	SDIO command line
18	SDIO_DATA_CLK	I/O	SDIO clock line
19	SDIO_DATA_3	I/O	SDIO data line 3
20	SDIO_DATA_2	I/O	SDIO data line 2
21	SDIO_DATA_0	I/O	SDIO data line 0
22	SDIO_DATA_1	I/O	SDIO data line 1
23	GND	—	Ground connections
24	NC	—	Floating (Don't connected to ground)
25	CBUCK_0P9	I	Internal Buck voltage generation pin
26	CSR_VLX	O	Internal Buck voltage generation pin
27	GND	—	Ground connections
28	ASR_VLX	O	Internal Analog Buck voltage generation pin
29	ABUCK_1P12	I	Internal Analog Buck voltage generation pin
30	GND	—	Ground connections
31	LPO	I	External Low Power Clock input (32.768KHz)
32	GND	—	Ground connections
33	WL_GPIO_10	I/O	WL_GPIO_10
34	VDDIO	P	I/O Voltage supply input

35	WL_GPIO_11	I/O	WL_GPIO_11
36	VBAT	P	Main power voltage source input
37	NC	—	Floating (Don't connected to ground)
38	BT_REG_ON	I	Low asserting reset for Bluetooth core
39	GND	—	Ground connections
40	BT_UART_TXD	O	Bluetooth UART interface
41	BT_UART_RXD	I	Bluetooth UART interface
42	BT_UART_RTS_N	O	Bluetooth UART interface
43	BT_UART_CTS_N	I	Bluetooth UART interface
44	BT_PCM_CLK	I/O	BT PCM CLK; can be master (output) or slave (input)
45	BT_PCM_SYNC	I/O	BT PCM sync ; can be master (output) or slave (input)
46	BT_PCM_IN	I	BT PCM data input
47	BT_PCM_OUT	O	BT PCM data output
48	NC	—	NC
49	BT_WAKE	I	HOST wake-up Bluetooth device
50	BT_HOST_WAKE	O	Bluetooth device to wake-up HOST

6. Dimensions

6.1 Module Dimensions

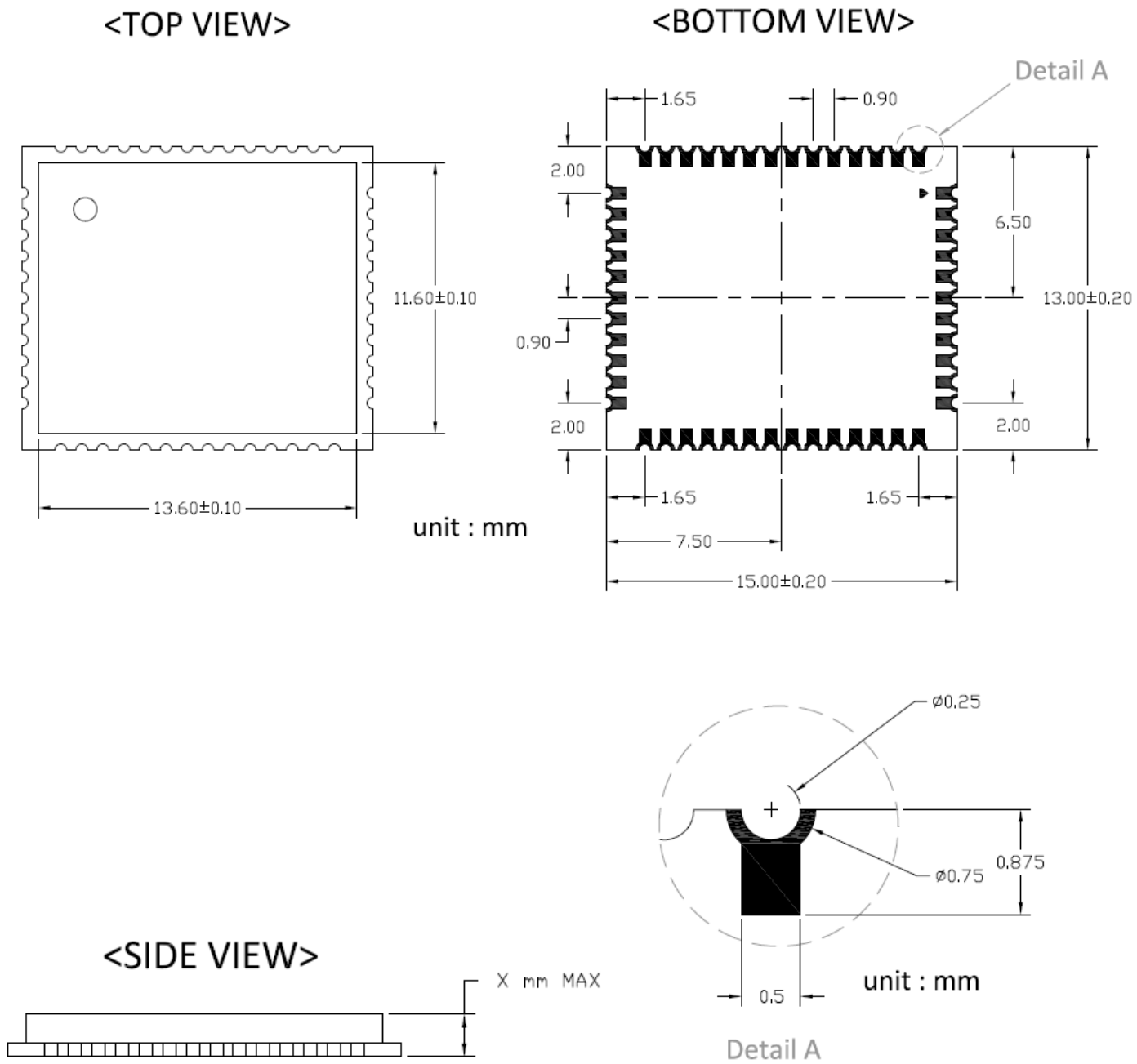

Note, X = 1.55mm

6.2 Recommended footprint

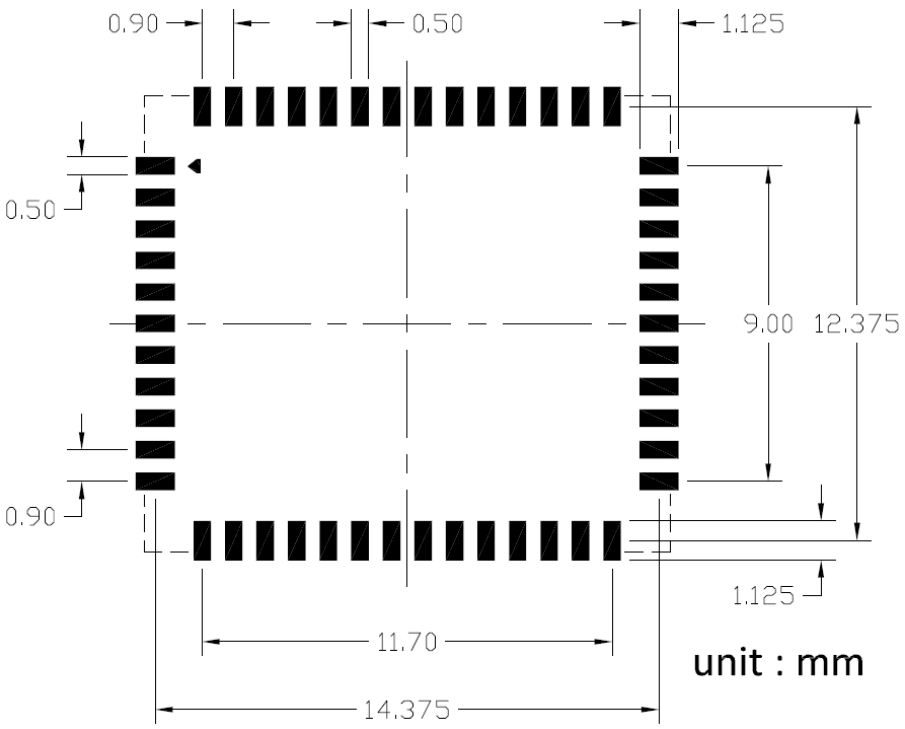

<TOP VIEW>

- Solder paste layer design is generally the same as recommended footprint.
  (錫膏層設計通常建議和焊墊尺寸相同)
- If soldering quality with good wetting on upright side is essential for PQC, how to optimize the aperture design in the stencil to adjust the amount of solder paste would be crucial.
  In addition, a kind of stencil design with stepped thickness in partial area would be considered if the thickness of stencil is about 0.1mm or thinner. Please optimize the stencil design by manufacture engineer or contact AMPAK FAE for assistance.
  (如果模組吃錫品質考量側面爬錫，如何優化鋼網開孔設計以調整適當的錫膏量是非常重要的。尤其鋼網的厚度大約是 0.1mm 或更薄時，可考慮局部加厚鋼網的設計。請諮詢製程工程師以優化鋼網的設計,或是聯絡正基科技技術支持團隊).

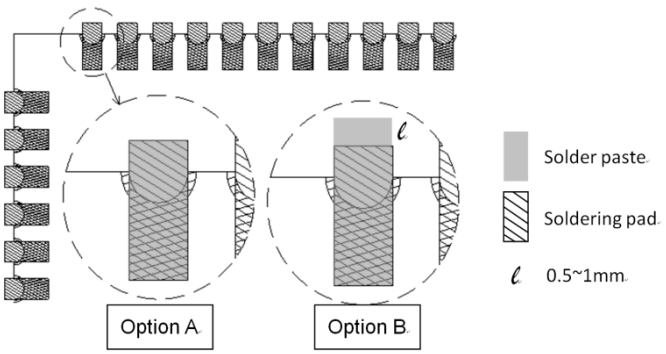

7. External clock reference

External LPO signal characteristics

Parameter	Specification	Units
Nominal input frequency	32.768	kHz
Frequency accuracy	+/-25	ppm
Duty cycle	30 - 70	%
Input signal amplitude	1.8±0.09	V
Signal type	Square-wave or sine-wave	-
Input impedance	>100k <5	Ω pF
Clock jitter (integrated over 300Hz – 15KHz)	<1	Hz
Output high voltage	0.7Vio - Vio	V

External 37.4MHz X'TAL characteristics

Parameter	Specification	Units
Nominal frequency - F0	37.4	MHz
Frequency Tolerance - △F / F 0 (At 25℃ +/- 3℃)	+/- 10	ppm
Operation Temperature Range - Topr	-30 ~ + 85	℃
Freq. Stability(over operating temperature) - TC Ref. to 25℃	+/- 10	ppm
Load capacitance - CL	18	pF
Equivalent Series Resistance – ESR	Max. 60	Ω
Drive Level - DL	Typ. 50, Max. 100	uW
Insulation resistance – IR At 100Vdc	Min. 500	MΩ

8. Host Interface Timing Diagram

8.1 Power-up Sequence Timing Diagram

The module has signals that allow the host to control power consumption by enabling or disabling the Bluetooth, WLAN and internal regulator blocks. These signals are described below.

Additionally, diagrams are provided to indicate proper sequencing of the signals for carious operating states. The timing value indicated are minimum required values: longer delays are also acceptable.

- WL_REG_ON: Used by the PMU to power up or power down the internal regulators used by the WLAN section. When this pin is high, the regulators are enabled and the WLAN section is out of reset. When this pin is low the WLAN section is in reset.
- BT_REG_ON: Used by the PMU to power up or power down the internal regulators used by the BT section. Low asserting reset for Bluetooth. This pin has no effect on WLAN and does not control any PMU functions. This pin must be driven high or low (not left floating).

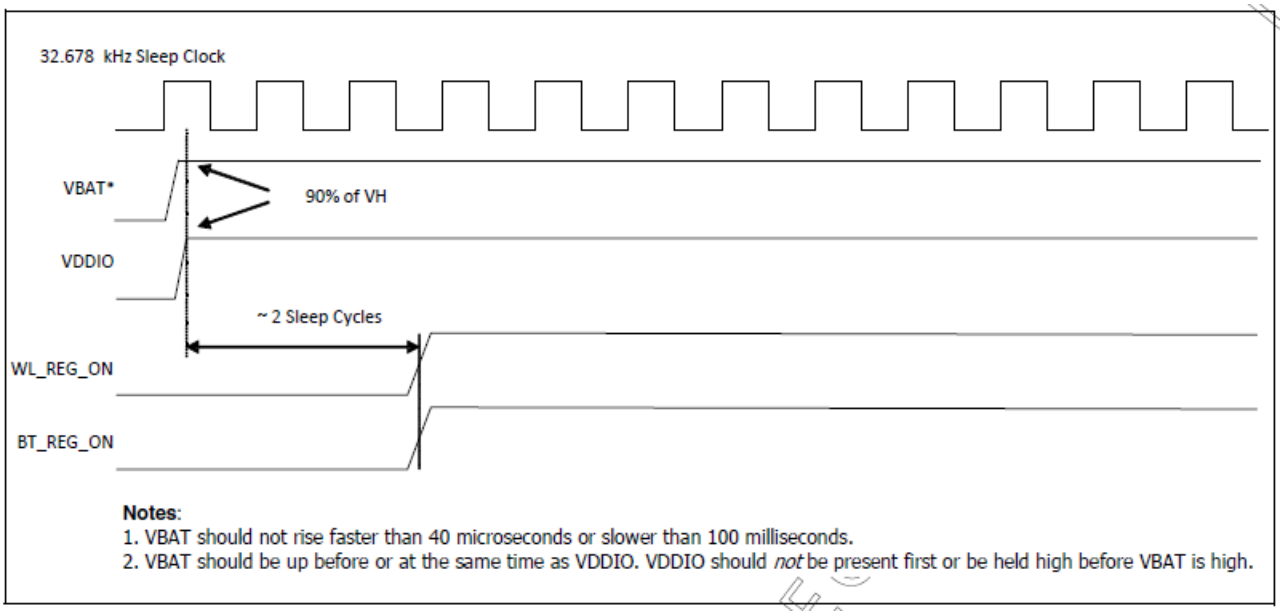

WLAN=ON, Bluetooth=ON

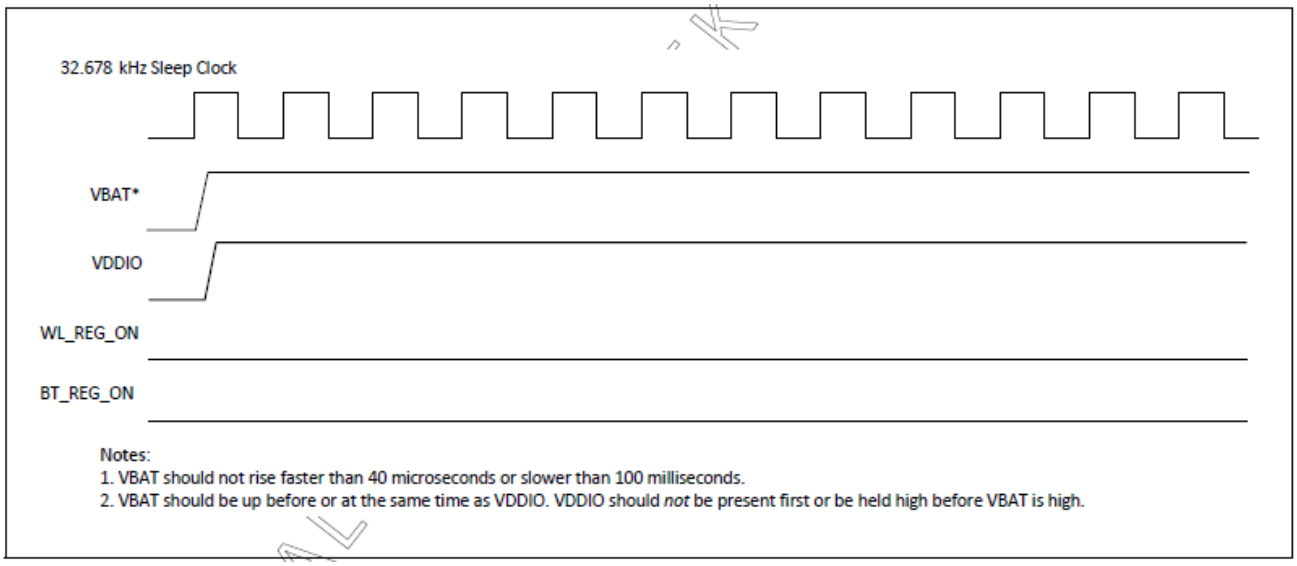

WLAN=OFF, Bluetooth=OFF

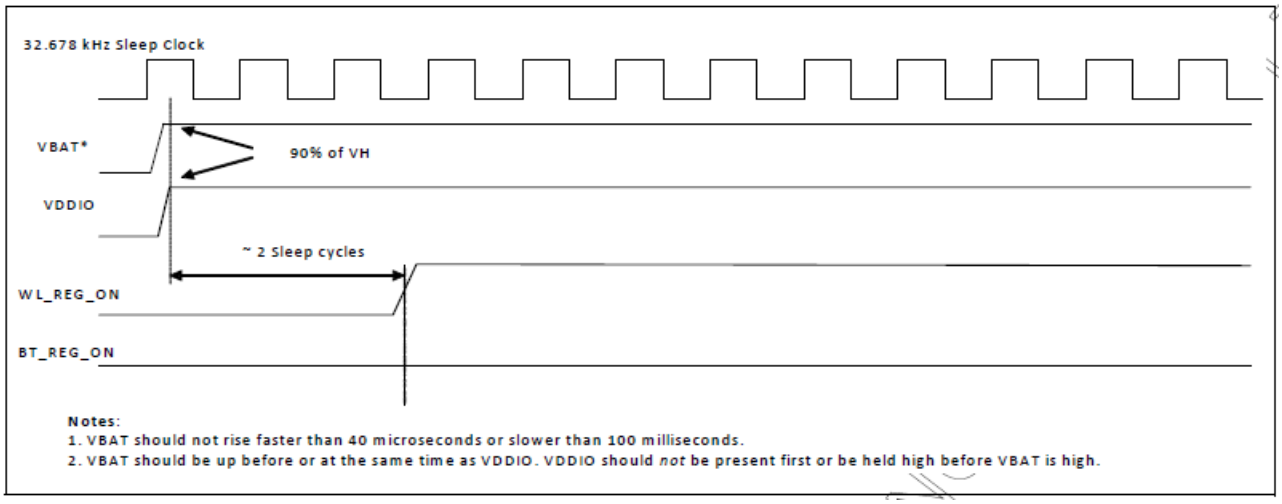

WLAN=ON, Bluetooth=OFF

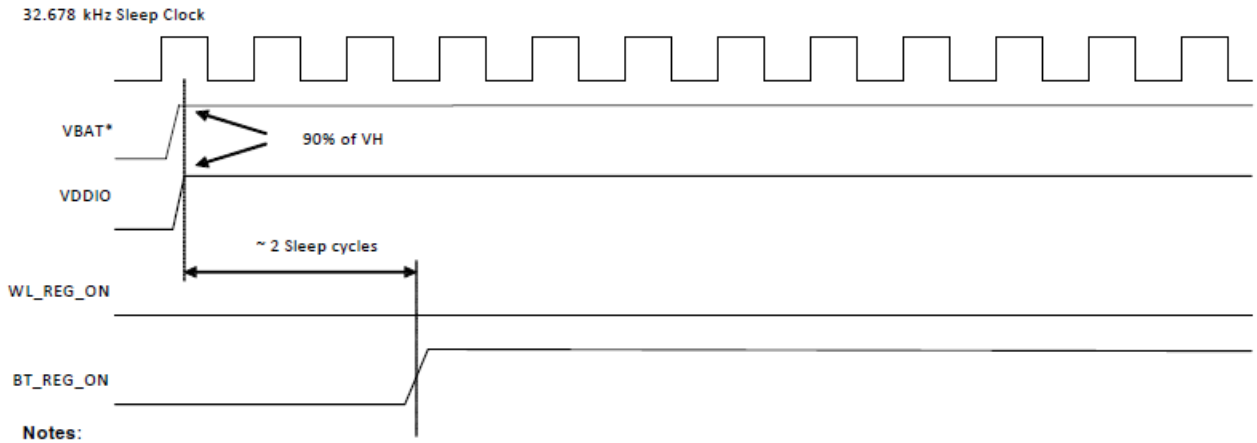

Notes:
1. VBAT should not rise faster than 40 microseconds or slower than 100 milliseconds.
2. VBAT should be up before or at the same time as VDDIO. VDDIO should *not* be present first or be held high before VBAT is high.

WLAN=OFF, Bluetooth=ON

8.2 SDIO Interface Description

The module supports SDIO version 3.0 for all 1.8V 4-bit UHSI speeds: SDR50(100 Mbps),SDR104(208MHz) and DDR50(50MHz, dual rates). It has the ability to stop the SDIO clock and map the interrupt signal into a GPIO pin. This 'out-of-band' interrupt signal notifies the host when the WLAN device wants to turn on the SDIO interface. The ability to force the control of the gated clocks from within the WLAN chip is also provided.

- Function 0 Standard SDIO function (Max BlockSize / ByteCount = 32B)
- Function 1 Backplane Function to access the internal System On Chip (SOC) address space (Max BlockSize / ByteCount = 64B)
- Function 2 WLAN Function for efficient WLAN packet transfer through DMA (Max BlockSize/ByteCount=512B)

SDIO Pin Description

SD 4-Bit Mode	
DATA0	Data Line 0
DATA1	Data Line 1 or Interrupt
DATA2	Data Line 2 or Read Wait
DATA3	Data Line 3
CLK	Clock
CMD	Command Line

SDIO Default Mode Timing Diagram

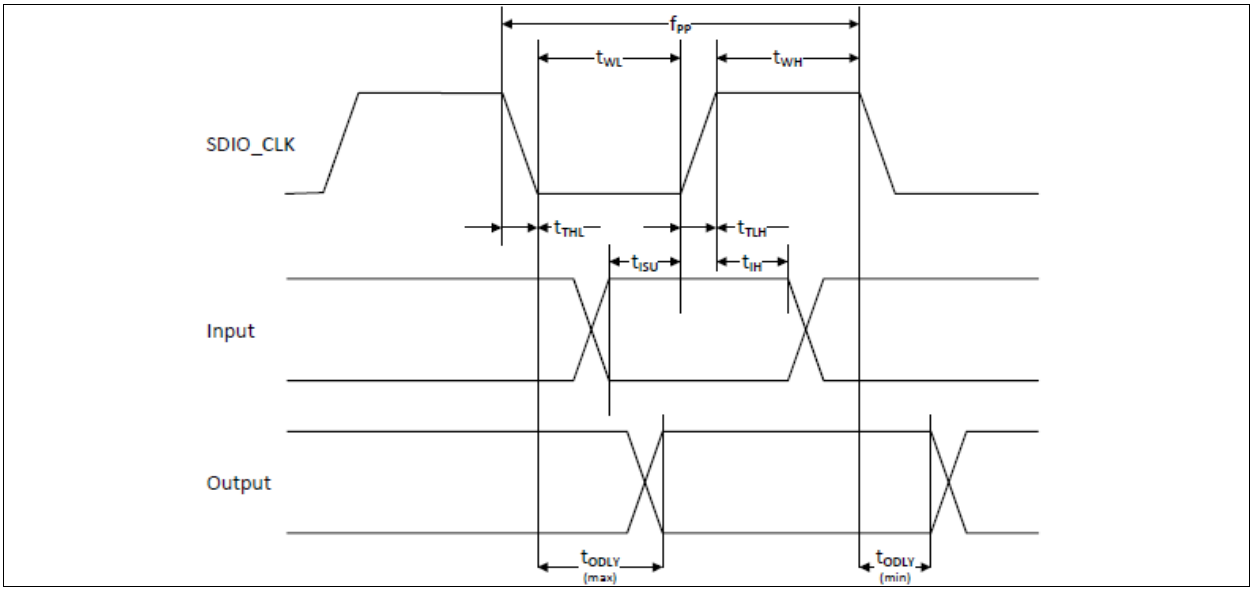

Parameter	*Symbol*	*Minimum*	*Typical*	*Maximum*	*Unit*
SDIO CLK (All values are referred to minimum VIH and maximum VIL[b])					
Frequency – Data Transfer mode	fPP	0	–	25	MHz
Frequency – Identification mode	fOD	0	–	400	kHz
Clock low time	tWL	10	–	–	ns
Clock high time	tWH	10	–	–	ns
Clock rise time	tTLH	–	–	10	ns
Clock low time	tTHL	–	–	10	ns
Inputs: CMD, DAT (referenced to CLK)					
Input setup time	tISU	5	–	–	ns
Input hold time	tIH	5	–	–	ns
Outputs: CMD, DAT (referenced to CLK)					
Output delay time – Data Transfer mode	tODLY	0	–	14	ns
Output delay time – Identification mode	tODLY	0	–	50	ns

a. Timing is based on CL ≤ 40pF load on CMD and Data.
b. min(Vih) = 0.7 × VDDIO and max(Vil) = 0.2 × VDDIO.

SDIO High Speed Mode Timing Diagram

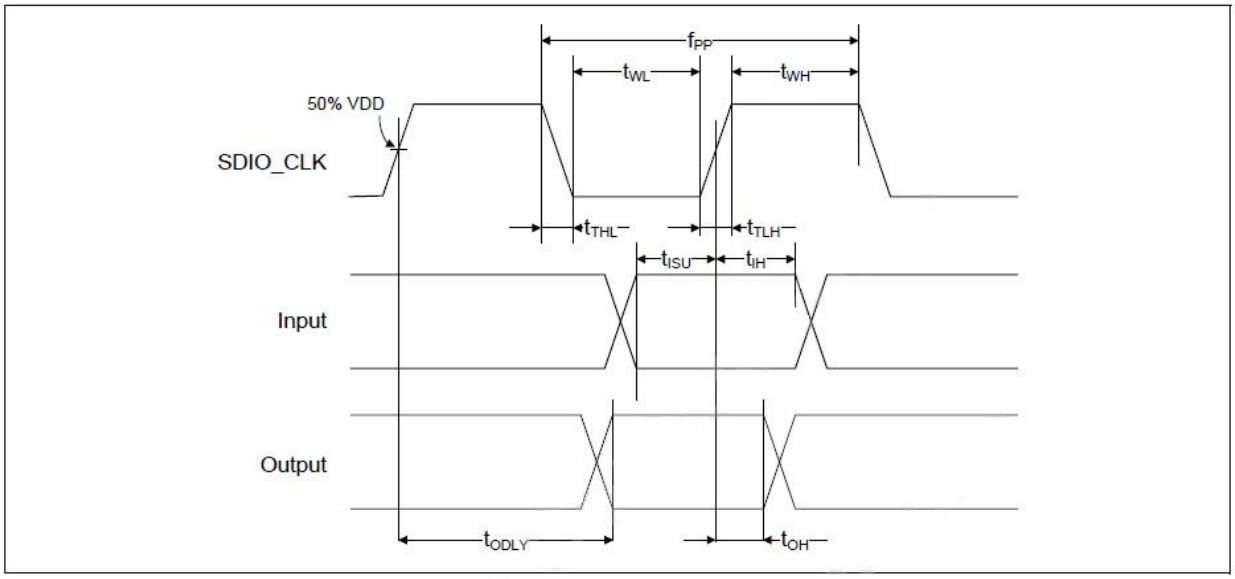

Parameter	*Symbol*	*Minimum*	*Typical*	*Maximum*	*Unit*
SDIO CLK (all values are referred to minimum VIH and maximum VIL[b])					
Frequency – Data Transfer Mode	fPP	0	–	50	MHz
Frequency – Identification Mode	fOD	0	–	400	kHz
Clock low time	tWL	7	–	–	ns
Clock high time	tWH	7	–	–	ns
Clock rise time	tTLH	–	–	3	ns
Clock low time	tTHL	–	–	3	ns
Inputs: CMD, DAT (referenced to CLK)					
Input setup Time	tISU	6	–	–	ns
Input hold Time	tIH	2	–	–	ns
Outputs: CMD, DAT (referenced to CLK)					
Output delay time – Data Transfer Mode	tODLY	–	–	14	ns
Output hold time	tOH	2.5	–	–	ns
Total system capacitance (each line)	CL	–	–	40	pF

a. Timing is based on CL ≤ 40 pF load on CMD and Data.
b. min(Vih) = 0.7 × VDDIO and max(Vil) = 0.2 × VDDIO.

SDIO Bus Timing Specifications in SDR Modes

Clock timing (SDR Modes)

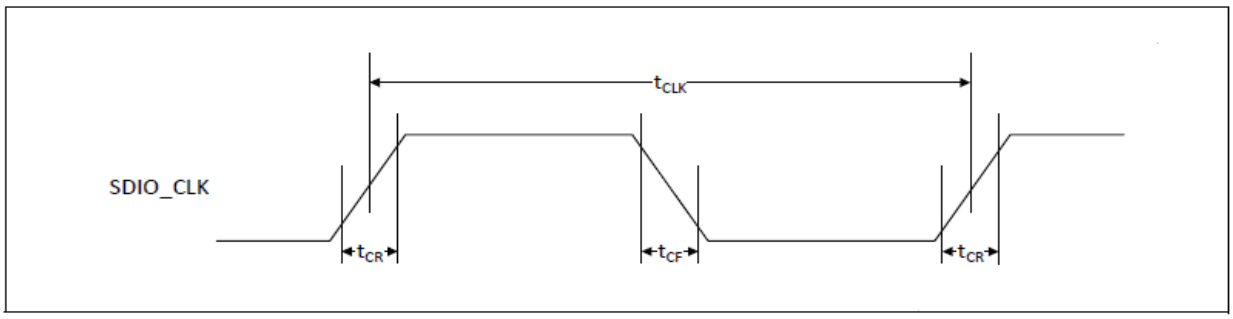

Parameter	Symbol	Minimum	Maximum	Unit	Comments
–	t_{CLK}	40	–	ns	SDR12 mode
		20	–	ns	SDR25 mode
		10	–	ns	SDR50 mode
		4.8	–	ns	SDR104 mode
–	t_{CR}, t_{CF}	–	$0.2 \times t_{CLK}$	ns	t_{CR}, t_{CF} < 2.00 ns (max) @100 MHz, C_{CARD} = 10 pF t_{CR}, t_{CF} < 0.96 ns (max) @208 MHz, C_{CARD} = 10 pF
Clock duty	–	30	70	%	–

SDIO Bus Input timing (SDR Modes)

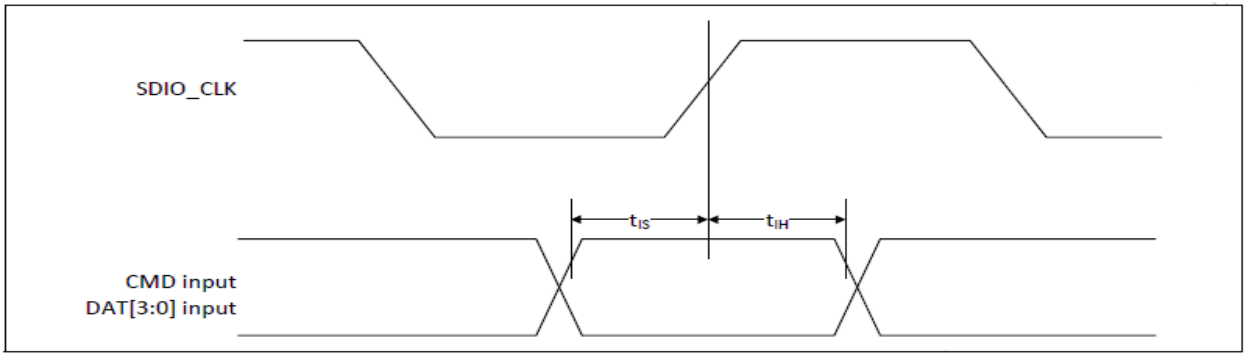

Symbol	Minimum	Maximum	Unit	Comments
SDR104 Mode				
t_{IS}	1.4	–	ns	C_{CARD} = 10 pF, VCT = 0.975V
t_{IH}	0.80	–	ns	C_{CARD} = 5 pF, VCT = 0.975V
SDR50 Mode				
t_{IS}	3.00	–	ns	C_{CARD} = 10 pF, VCT = 0.975V
t_{IH}	0.80	–	ns	C_{CARD} = 5 pF, VCT = 0.975V

SDIO Bus output timing (SDR Modes up to 100MHz)

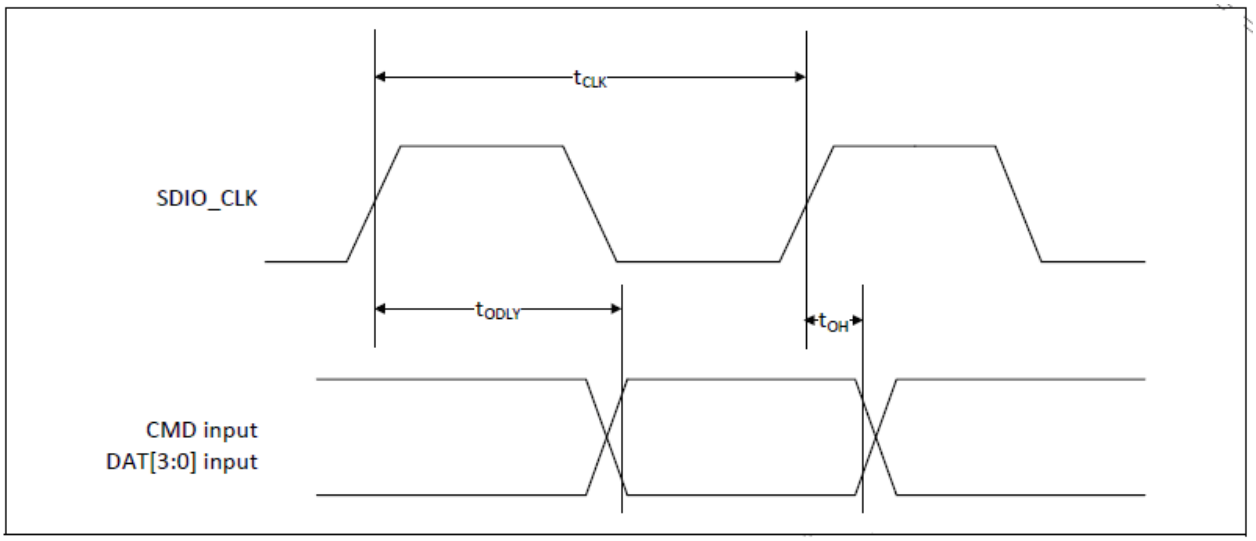

Symbol	Minimum	Maximum	Unit	Comments
t_{ODLY}	–	7.5	ns	$t_{CLK} \geq 10$ ns $C_L = 30$ pF using driver type B for SDR50
t_{ODLY}	–	14.0	ns	$t_{CLK} \geq 20$ ns $C_L = 40$ pF using for SDR12, SDR25
t_{OH}	1.5	–	ns	Hold time at the t_{ODLY} (min) $C_L = 15$ pF

Card output timing (SDR Modes 100MHz to 208MHz)

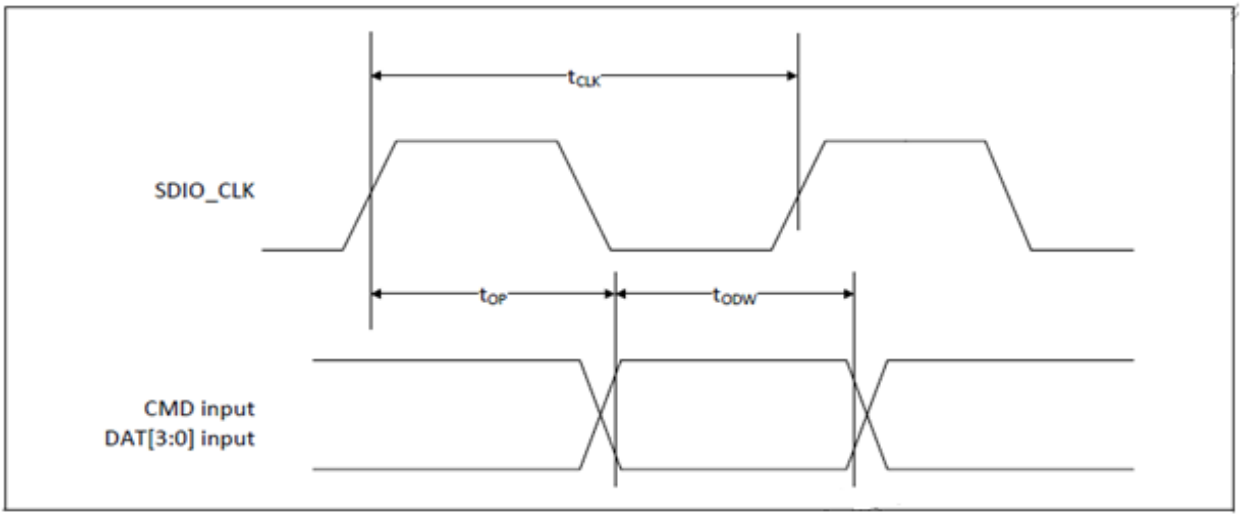

Symbol	Minimum	Maximum	Unit	Comments
t_{OP}	0	2	UI	Card output phase
Δt_{OP}	–350	+1550	ps	Delay variation due to temp change after tuning
t_{ODW}	0.60	–	UI	t_{ODW}=2.88 ns @208 MHz

- Δt_{OP} = +1550 ps for junction temperature of Δt_{OP} = 90 degrees during operation
- Δt_{OP} = –350 ps for junction temperature of Δt_{OP} = –20 degrees during operation
- Δt_{OP} = +2600 ps for junction temperature of Δt_{OP} = –20 to +125 degrees during operation

Δt_{OP} Consideration for Variable Data Window (SDR 104 Mode)

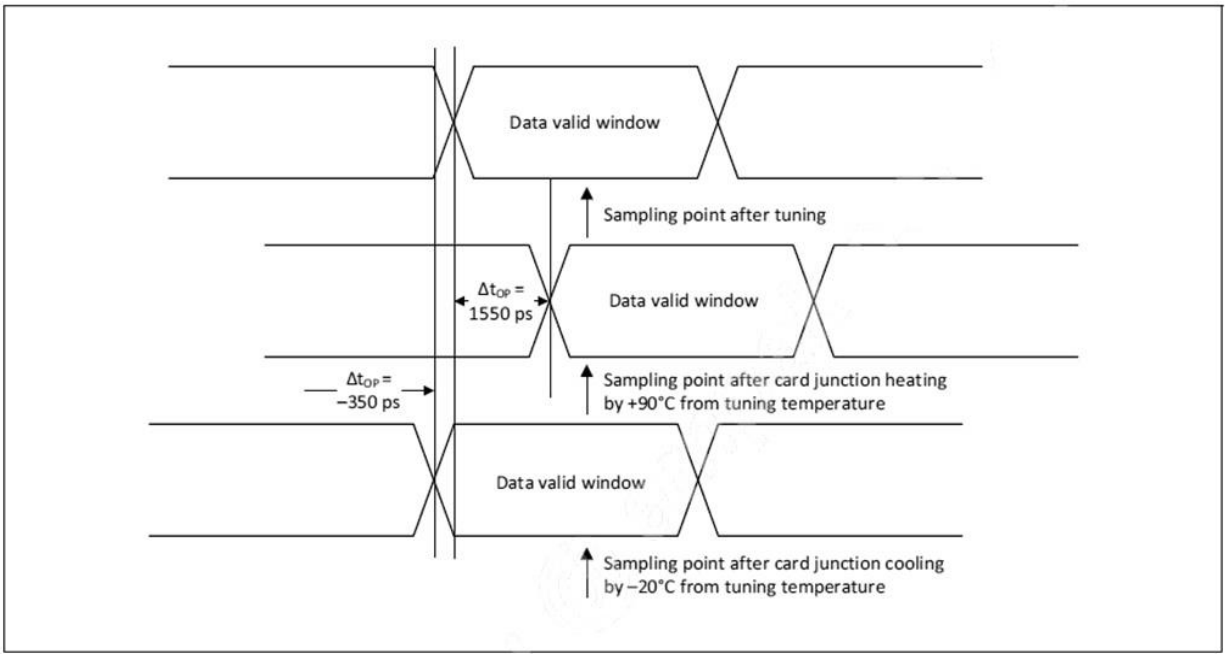

SDIO Bus Timing Specifications in DDR50 Mode

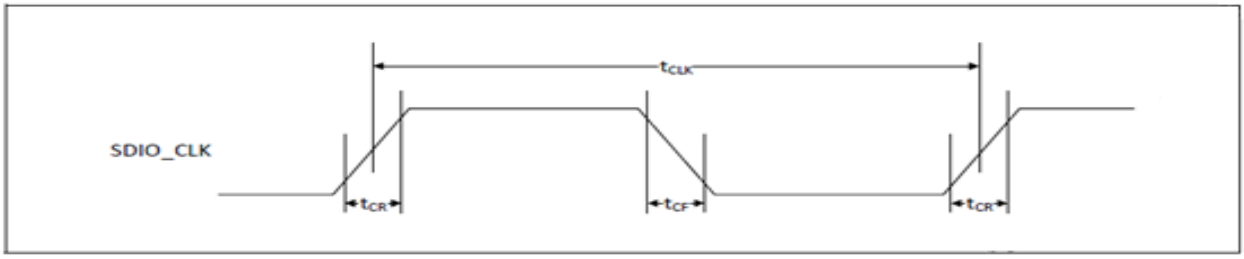

Parameter	Symbol	Minimum	Maximum	Unit	Comments
–	t_{CLK}	20	–	ns	DDR50 mode
–	t_{CR},t_{CF}	–	0.2 × tCLK	ns	t_{CR}, t_{CF} < 4.00 ns (max) @50 MHz, C_{CARD} = 10 pF
Clock duty	–	45	55	%	–

Data Timing

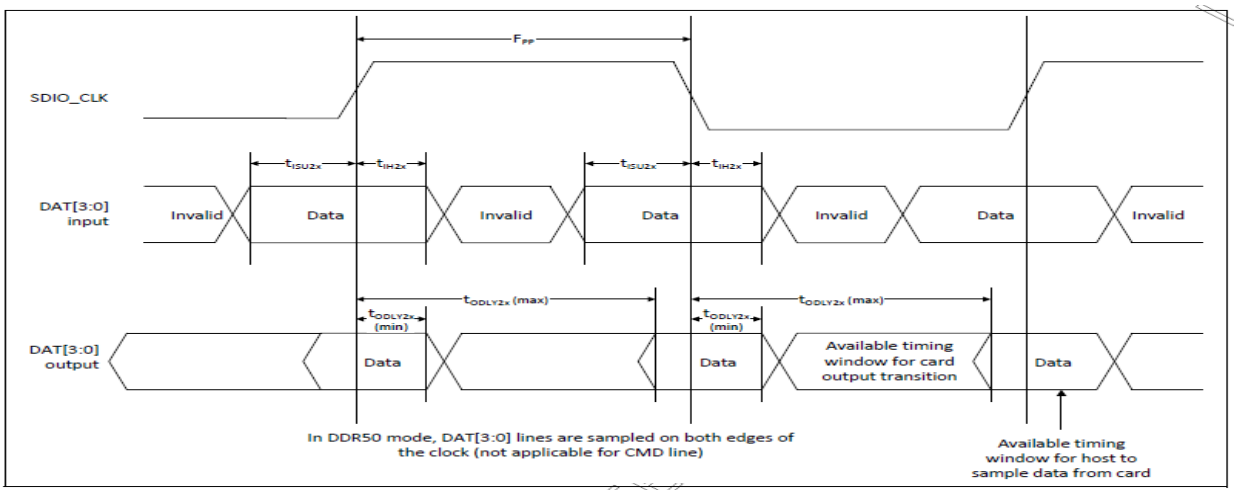

Parameter	Symbol	Minimum	Maximum	Unit	Comments
Input CMD					
Input setup time	t_{ISU}	6	–	ns	C_{CARD} < 10 pF (1 Card)
Input hold time	t_{IH}	0.8	–	ns	C_{CARD} < 10 pF (1 Card)
Output CMD					
Output delay time	t_{ODLY}	–	13.7	ns	C_{CARD} < 30 pF (1 Card)
Output hold time	t_{OH}	1.5	–	ns	C_{CARD} < 15 pF (1 Card)
Input DAT					
Input setup time	t_{ISU2x}	3	–	ns	C_{CARD} < 10 pF (1 Card)
Input hold time	t_{IH2x}	0.8	–	ns	C_{CARD} < 10 pF (1 Card)
Output DAT					
Output delay time	t_{ODLY2x}	–	7.5	ns	C_{CARD} < 25 pF (1 Card)
Output hold time	t_{ODLY2x}	1.5	–	ns	C_{CARD} < 15 pF (1 Card)

8.3 PCM Interface Description

The PCM Interface on the AP6275S can connect to linear PCM Codec devices in master or slave mode. In master mode, the AP6275S generates the PCM_CLK and PCM_SYNC signals, and in slave mode, these signals are provided by another master on the PCM interface and are inputs to the AP6275S.The configuration of the PCM interface may be adjusted by the host through the use of vendor-specific HCI commands.

Short Frame Sync, Master Modem

PCM Timing Diagram (Short Frame Sync, Master Mode)

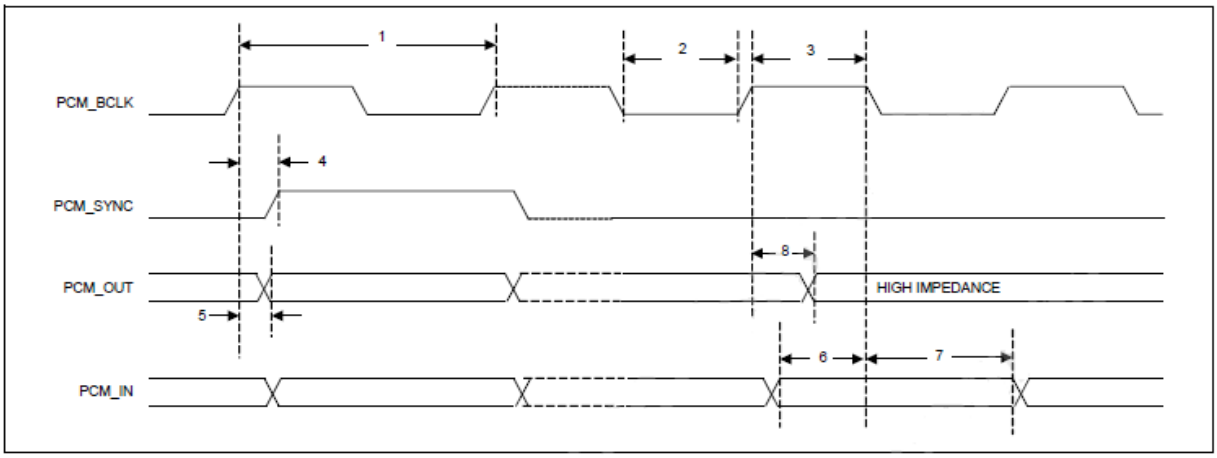

PCM Interface Timing Specifications (Short Frame Sync, Master Mode)

Reference	Characteristics	Minimum	Typical	Maximum	Unit
1	PCM bit clock frequency		–	12	MHz
2	PCM bit clock low	41	–	–	ns
3	PCM bit clock high	41	–	–	ns
4	PCM_SYNC delay	0	–	25	ns
5	PCM_OUT delay	0	–	25	ns
6	PCM_IN setup	8	–	–	ns
7	PCM_IN hold	8	–	–	ns
8	Delay from rising edge of PCM_BCLK during last bit period to PCM_OUT becoming high impedance	0	–	25	ns

Short Frame Sync, Slave Mode

PCM Timing Diagram (Short Frame Sync, Slave Mode)

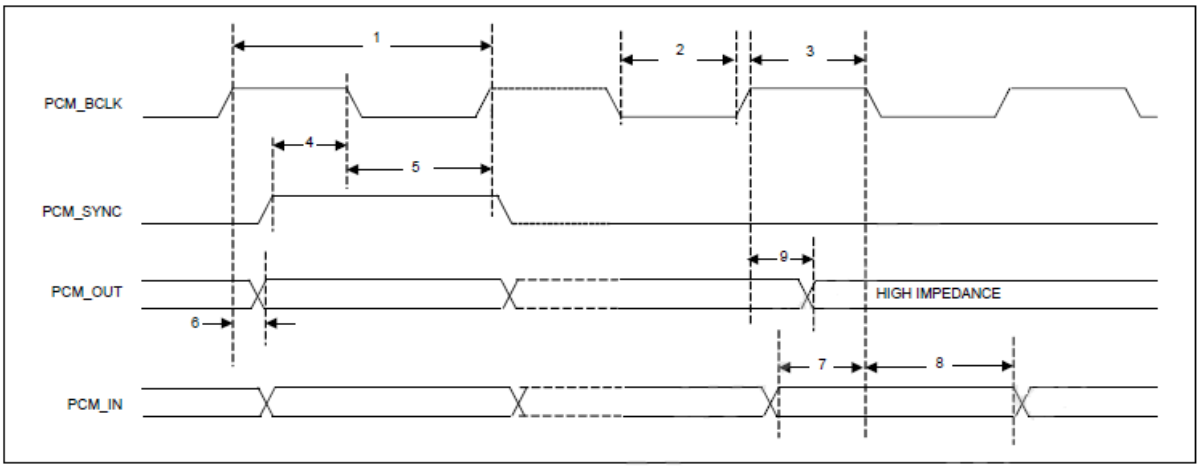

PCM Interface Timing Specifications (Short Frame Sync, Slave Mode)

Reference	Characteristics	Minimum	Typical	Maximum	Unit
1	PCM bit clock frequency	–	–	12	MHz
2	PCM bit clock low	41	–	–	ns
3	PCM bit clock high	41	–	–	ns
4	PCM_SYNC setup	8	–	–	ns
5	PCM_SYNC hold	8	–	–	ns
6	PCM_OUT delay	0	–	25	ns
7	PCM_IN setup	8	–	–	ns
8	PCM_IN hold	8	–	–	ns
9	Delay from rising edge of PCM_BCLK during last bit period to PCM_OUT becoming high impedance	0	–	25	ns

Long Frame Sync, Master Mode

PCM Timing Diagram (Long Frame Sync, Master Mode)

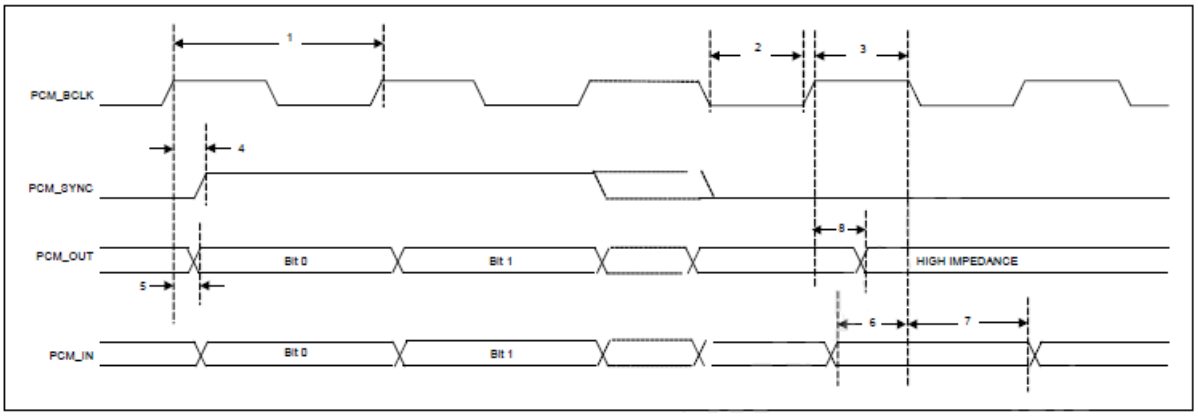

PCM Interface Timing Specifications (Long Frame Sync, Master Mode)

Reference	*Characteristics*	*Minimum*	*Typical*	*Maximum*	*Unit*
1	PCM bit clock frequency	–	–	12	MHz
2	PCM bit clock low	41	–	–	ns
3	PCM bit clock high	41	–	–	ns
4	PCM_SYNC delay	0	–	25	ns
5	PCM_OUT delay	0	–	25	ns
6	PCM_IN setup	8	–	–	ns
7	PCM_IN hold	8	–	–	ns
8	Delay from rising edge of PCM_BCLK during last bit period to PCM_OUT becoming high impedance	0	–	25	ns

Long Frame Sync, Slave Mode

PCM Timing Diagram (Long Frame Sync, Slave Mode)

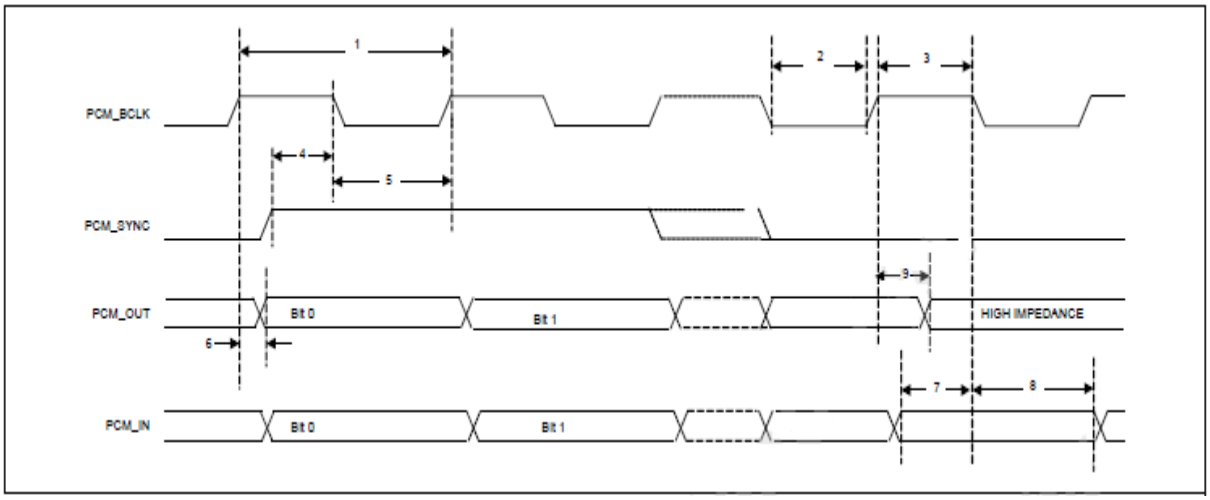

PCM Interface Timing Specifications (Long Frame Sync, Slave Mode)

Reference	*Characteristics*	*Minimum*	*Typical*	*Maximum*	*Unit*
1	PCM bit clock frequency	–	–	12	MHz
2	PCM bit clock low	41	–	–	ns
3	PCM bit clock high	41	–	–	ns
4	PCM_SYNC setup	8	–	–	ns
5	PCM_SYNC hold	8	–	–	ns
6	PCM_OUT delay	0	–	25	ns
7	PCM_IN setup	8	–	–	ns
8	PCM_IN hold	8	–	–	ns
9	Delay from rising edge of PCM_BCLK during last bit period to PCM_OUT becoming high impedance	0	–	25	ns

Short Frame Sync, Burst Mode

PCM Burst Mode Timing (Receive Only, Short Frame Sync)

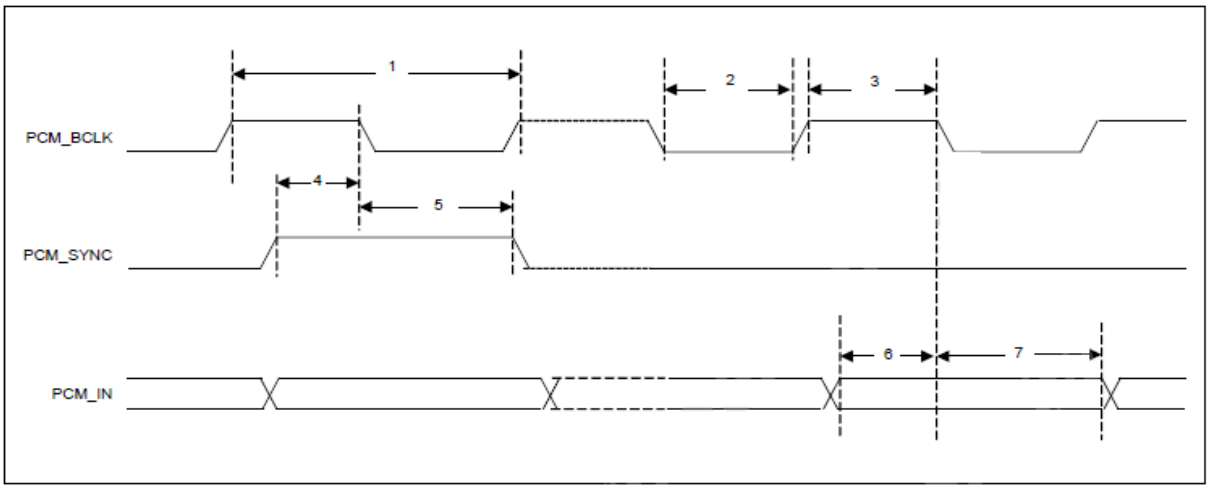

PCM Burst Mode (Receive Only, Short Frame Sync)

Reference	Characteristics	Minimum	Typical	Maximum	Unit
1	PCM bit clock frequency	–	–	24	MHz
2	PCM bit clock low	20.8	–	–	ns
3	PCM bit clock high	20.8	–	–	ns
4	PCM_SYNC setup	8	–	–	ns
5	PCM_SYNC hold	8	–	–	ns
6	PCM_IN setup	8	–	–	ns
7	PCM_IN hold	8	–	–	ns

Long Frame Sync, Burst Mode

PCM Burst Mode Timing (Receive Only, Long Frame Sync)

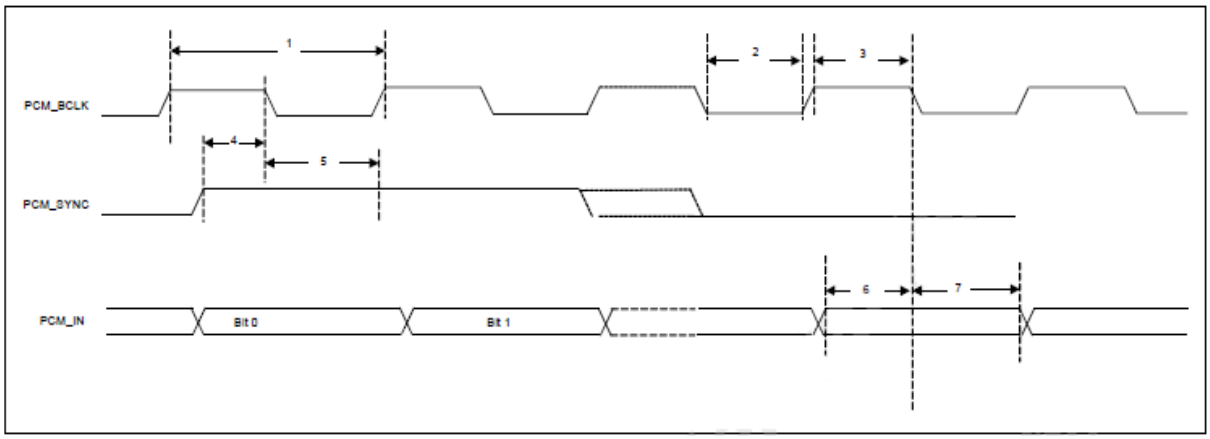

PCM Burst Mode (Receive Only, Long Frame Sync)

Reference	Characteristics	Minimum	Typical	Maximum	Unit
1	PCM bit clock frequency	–	–	24	MHz
2	PCM bit clock low	20.8	–	–	ns
3	PCM bit clock high	20.8	–	–	ns
4	PCM_SYNC setup	8	–	–	ns
5	PCM_SYNC hold	8	–	–	ns
6	PCM_IN setup	8	–	–	ns
7	PCM_IN hold	8	–	–	ns

8.4 UART Interface Description

The UART is a standard 4-wire interface (RX, TX, RTS, and CTS) with adjustable baud rates from 9600 bps to 4.0 Mbps. The interface features an automatic baud rate detection capability that returns a baud rate selection. Alternatively, the baud rate may be selected through a vendor-specific UART HCI command.

UART has a 1040-byte receive FIFO and a 1040-byte transmit FIFO to support EDR. Access to the FIFOs is conducted through the AHB interface through either DMA or the CPU. The UART supports the Bluetooth 5.0 UART HCI specification: H4, a custom Extended H4, and H5. The default baud rate is 115.2 Kbaud.

The UART supports the 3-wire H5 UART transport, as described in the Bluetooth specification (Three-wire UART Transport Layer). Compared to H4, the H5 UART transport reduces the number of signal lines required by eliminating the CTS and RTS signals.

The UART can perform XON/XOFF flow control and includes hardware support for the Serial Line Input Protocol (SLIP). It can also perform wake-on activity. For example, activity on the RX or CTS inputs can wake the chip from a sleep state.

Normally, the UART baud rate is set by a configuration record downloaded after device reset, or by automatic baud rate detection, and the host does not need to adjust the baud rate. Support for changing the baud rate during normal HCI UART operation is included through a vendor-specific command that allows the host to adjust the contents of the baud rate registers. The UARTs operate correctly with the host UART as long as the combined baud rate error of the two devices is within ±2%.

Example of Common Baud Rates

Desired Rate	Actual Rate	Error (%)
4000000	4000000	0.00
3692000	3692308	0.01
3000000	3000000	0.00
2000000	2000000	0.00
1500000	1500000	0.00
1444444	1454544	0.70
921600	923077	0.16
460800	461538	0.16
230400	230796	0.17
115200	115385	0.16
57600	57692	0.16
38400	38400	0.00
28800	28846	0.16
19200	19200	0.00
14400	14423	0.16
9600	9600	0.00

UART Timing

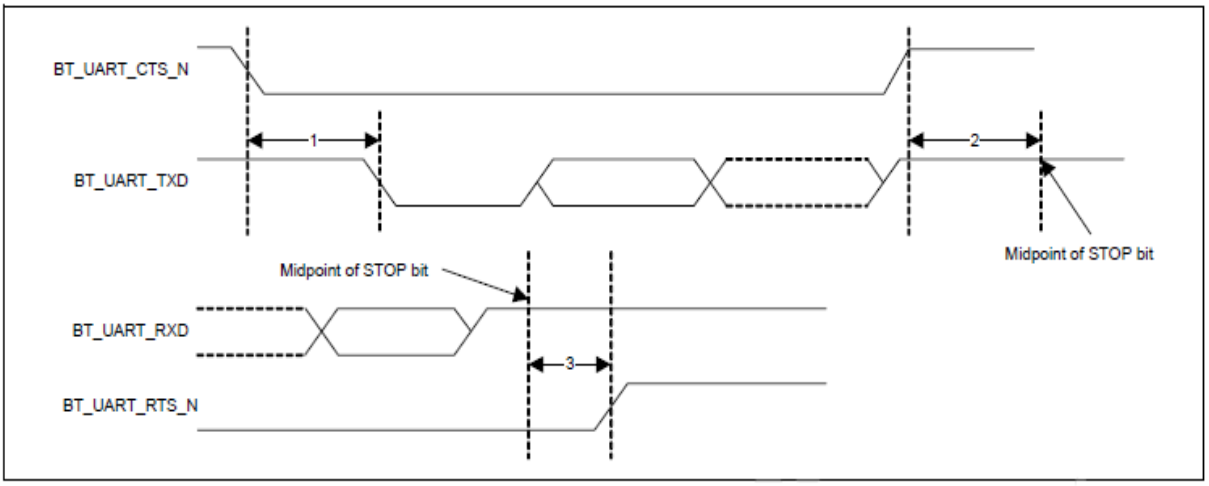

UART Timing Specifications

Ref	Characteristics	Min.	Typ.	Max.	Unit
1	Delay time, BT_UART_CTS_N low to BT_UART_TXD valid	–	–	1.5	Bit periods
2	Setup time, BT_UART_CTS_N high before midpoint of stop bit	–	–	0.5	Bit periods
3	Delay time, midpoint of stop bit to BT_UART_RTS_N high	–	–	0.5	Bit periods

9. Recommended Reflow Profile

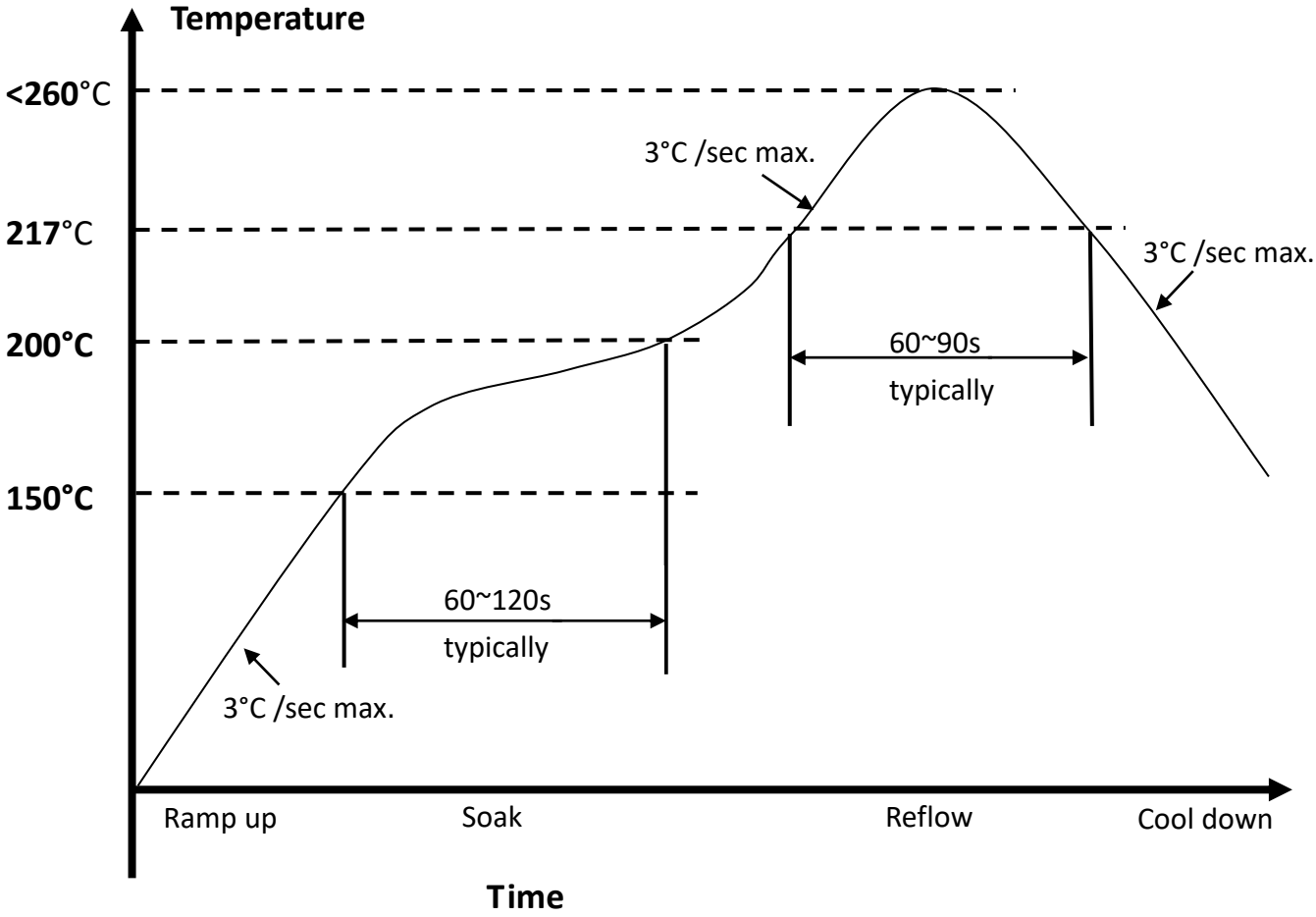

1. Referred to IPC/JEDEC standard
2. Peak Temperature : <260°C(Time within 5°C of actual Peak Temperature 20-40 seconds)
3. Cycle of Reflow : 2 times max.
4. Adding Nitrogen (N2) to implement 2000ppm or less of oxygen concentration during reflow process is recommended.
5. If the shelf time is exceeded, be sure baking step to remove the moisture from the component

10. Package Information

10.1 Label

Label A→ Anti-static and humidity notice

Label B→ MSL caution / Storage Condition

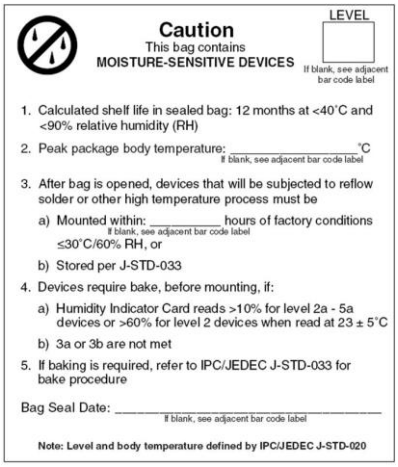

Caution
This bag contains
MOISTURE-SENSITIVE DEVICES

LEVEL
If blank, see adjacent bar code label

1. Calculated shelf life in sealed bag: 12 months at <40°C and <90% relative humidity (RH)
2. Peak package body temperature: _____ °C
   If blank, see adjacent bar code label
3. After bag is opened, devices that will be subjected to reflow solder or other high temperature process must be
   a) Mounted within: _____ hours of factory conditions
      If blank, see adjacent bar code label
      ≤30°C/60% RH, or
   b) Stored per J-STD-033
4. Devices require bake, before mounting, if:
   a) Humidity Indicator Card reads >10% for level 2a - 5a devices or >60% for level 2 devices when read at 23 ± 5°C
   b) 3a or 3b are not met
5. If baking is required, refer to IPC/JEDEC J-STD-033 for bake procedure

Bag Seal Date: _____
If blank, see adjacent bar code label

Note: Level and body temperature defined by IPC/JEDEC J-STD-020

Label C→ Inner box label .

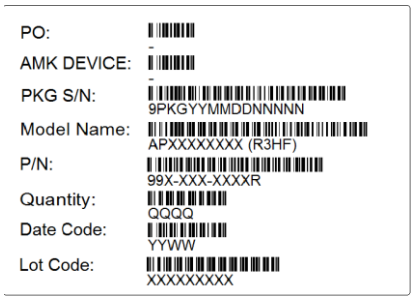

PO: -
AMK DEVICE: -
PKG S/N: 9PKGYYMMDDNNNNN
Model Name: APXXXXXXXX (R3HF)
P/N: 99X-XXX-XXXXR
Quantity: QQQQ
Date Code: YYWW
Lot Code: XXXXXXXXX

Label D→ Carton box label .

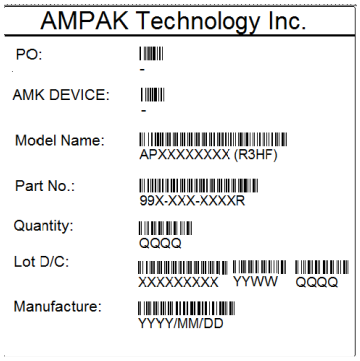

AMPAK Technology Inc.

PO: -
AMK DEVICE: -
Model Name: APXXXXXXXX (R3HF)
Part No.: 99X-XXX-XXXXR
Quantity: QQQQ
Lot D/C: XXXXXXXXX YYWW QQQQ
Manufacture: YYYY/MM/DD

10.2 Dimension

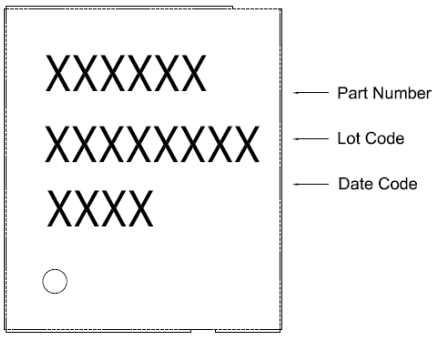

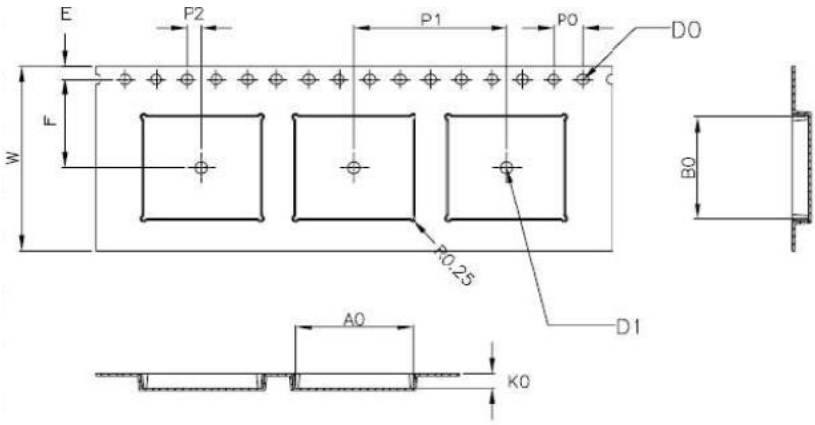

W	24.00±0.30
A0	15.30±0.10
B0	13.30±0.10
K0	2.00±0.10
E	1.75±0.10
F	11.50±0.10
P0	4.00±0.10
P1	20.00±0.10
P2	2.00±0.10
D0	1.50 $^{+0.10}_{-0.00}$
D1	ø1.50MIN

1. 10 sprocket hole pitch cumulative tolerance ±0.20.
2. Carrier camber is within 1 mm in 250 mm.
3. Material : Black Conductive Polystyrene Alloy.
4. All dimensions meet EIA-481-D requirements.
5. Thickness: 0.30±0.05mm.
6. Component load per 13”reel : 1000 pcs

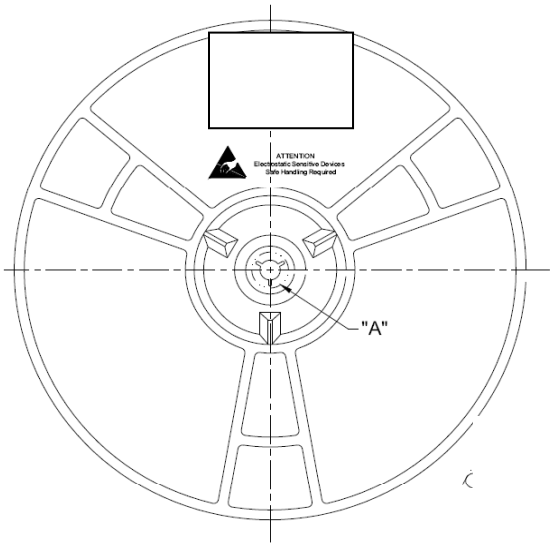

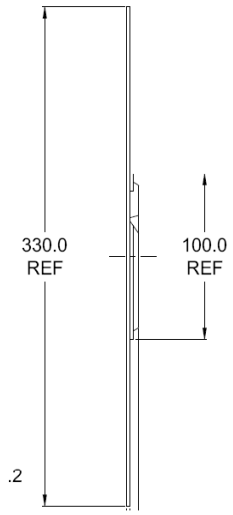

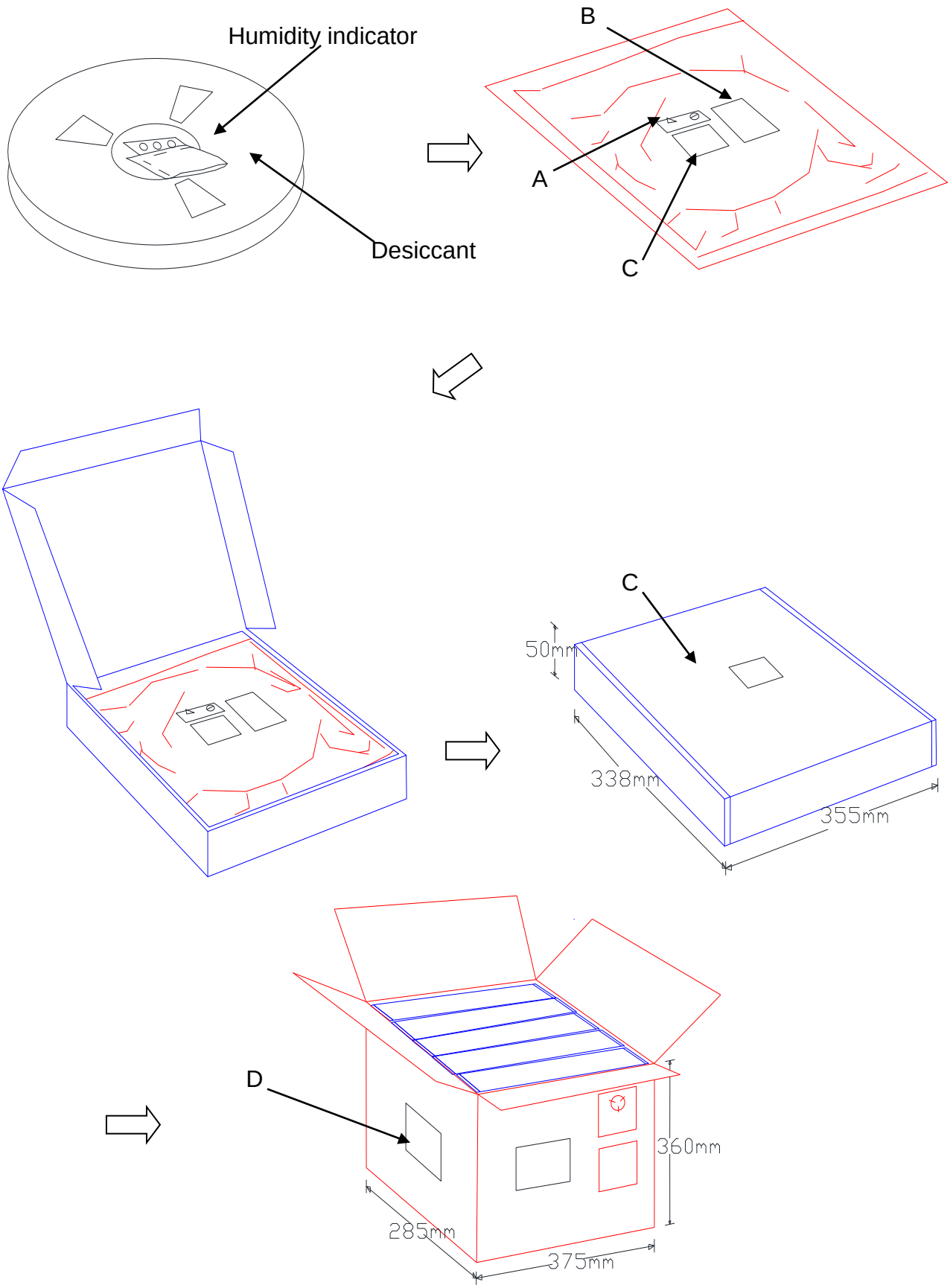
Humidity indicator
Desiccant
B
A
C
C
50mm
338mm
355mm
D
360mm
285mm
375mm

10.3 MSL Level / Storage Condition

Caution

This bag contains
MOISTURE-SENSITIVE DEVICES

LEVEL
4
If blank,see adjacent bar code label

1. Calculated shelf life in sealed bag:12months at<40℃and <90% relative humidity(RH)
2. Peak package body temperature:___250___℃
   If blank,see adjacent bar code label
3. After bag is opened,devices that will be subjected to reflow solder or other high temperature process must be
   a) Mounted within:___72___hours of factory conditions
   If blank,see adjacent bar code label
   ≤30℃/60% RH,or
   b) Stored per J-STD-033
4. Devices require bake,before mounting,if:
   a) Humidity Indicator Card reads>10% for level 2a-5a devices or>60% for level 2 devices when read at 23±5℃
   b) 3a or 3b are not met.
5. If baking is required, refer to IPC/JEDEC J-STD-033 for bake procedure.

Bag Seal Date:_____
If blank,see adjacent bar code label

Note:Level and body temperature defined by IPC/JEDEC J-STD-020

FCC Caution:

Any changes or modifications not expressly approved by the party responsible for compliance could void the user's authority to operate this equipment.

This device complies with part 15 of the FCC Rules. Operation is subject to the following two conditions: (1) this device may not cause harmful interference, and (2) this device must accept any interference received, including interference that may cause undesired operation.
This device and its antenna(s) must not be co-located or operating in conjunction with any other antenna or transmitter.

NOTE: This equipment has been tested and found to comply with the limits for a Class B digital device, pursuant to Part 15 of the FCC Rules. These limits are designed to provide reasonable protection against harmful interference in a residential installation. This equipment generates, uses and can radiate radio frequency energy and, if not installed and used in accordance with the instructions, may cause harmful interference to radio communications. However, there is no guarantee that interference will not occur in a particular installation.
If this equipment does cause harmful interference to radio or television reception,
which can be determined by turning the equipment off and on, the user is encouraged to try to correct the interference by one or more of the following measures:
-- Reorient or relocate the receiving antenna.
-- Increase the separation between the equipment and receiver.
-- Connect the equipment into an outlet on a circuit different
from that to which the receiver is connected.
-- Consult the dealer or an experienced radio/TV technician for help.
To maintain compliance with FCC's RF Exposure guidelines, This equipment should be installed and operated with minimum distance between 20cm the radiator your body: Use only the supplied antenna.

ISED Statement

EN

This device contains licence-exempt transmitter(s)/receiver(s) that comply with Innovation, Science and Economic Development Canada's licence-exempt RSS(s). Operation is subject to the following two conditions:

1. This device may not cause interference.
2. This device must accept any interference, including interference that may cause undesired operation of the device.

To reduce the risk of harmful interference and to ensure compliance with RF exposure guidelines, a minimum separation distance of 20 cm must be maintained between the antenna and any part of the body.

FR

L'émetteur/récepteur exempt de licence contenu dans le présent appareil est conforme aux CNR d'Innovation, Sciences et Développement économique Canada applicables aux appareils radio exempts de licence. L'exploitation est autorisée aux deux conditions suivantes :

1. L'appareil ne doit pas produire de brouillage;
2. L'appareil doit accepter tout brouillage radioélectrique subi, même si le brouillage est susceptible d'en compromettre le fonctionnement.

Afin de réduire le risque d'interférences nuisibles et d'assurer le respect des directives d'exposition aux RF, une distance de séparation minimale de 20 cm doit être maintenue entre l'antenne et toute partie du corps.

Modular Usage Conditions/ Conditions d'utilisation du module:

FCC

This modular transmitter (FCC ID: 2A2P9-AP6275S) is approved for integration **only** into host devices where the antenna can maintain a minimum distance of **20 cm from all persons**.

- The final end-product must display a label with the phrase:

"Contains Transmitter Module FCC ID:`2A2P9-AP6275S`.

The host manufacturer is responsible for additional FCC compliance (e.g., unintentional radiator testing under Part 15B) and any modifications beyond the module's original authorization.

ISED

This modular transmitter (IC: `27618-AP6275S`) is approved **only** for integration into host devices where the antenna maintains ≥20 cm from users.

The final product **must display**: "Contains IC: `27618-AP6275S`".

Ce module émetteur (IC : `27618-AP6275S`) est approuvé uniquement pour une intégration dans des appareils hôtes où l'antenne est installée à ≥20 cm des utilisateurs.

Le produit final **doit porter** : "Contient IC : `27618-AP6275S`".

Host Manufacturer Responsibilities / Responsabilités du fabricant hôte:

The host manufacturer must:

1. Ensure compliance with ISED regulations (RSS-Gen, RSS-102, CAN ICES-3).
2. Re-evaluate RF exposure if the module is integrated into portable devices (e.g., phones/tablets).
3. Not modify the module's approved RF parameters.

Le fabricant hôte doit :

1. Garantir la conformité aux réglementations ISED (RSS-Gen, RSS-102, CAN ICES-3).
2. Réévaluer l'exposition aux RF si le module est intégré dans des appareils portables (téléphones/tablettes).
3. Ne pas modifier les paramètres RF approuvés du module.