Step 3: Wiring

WARNING

- Risk of electric shock. Before wiring, make sure the power is off.
- Install Overcurrent Protection Devices (OCPD) between the box and battery storage, according to the local regulation.

General terminal information is listed below:

Terminal	Wire gauge	Wire strip length	Torque	Tool
L1, L2, N, GND on the smart inlet box	6 AWG-250 kcmil	20 mm (13/16 in.)	250 - 275 in-lbs (28.2 - 31.1 Nm)	5/16-inch hex

The maximum length bewtween the smart inlet box and the panel is 30 m (98 ft).

The following illustration is an example of using the product as the main panel and connecting with EcoFlow Smart Inlet Box.

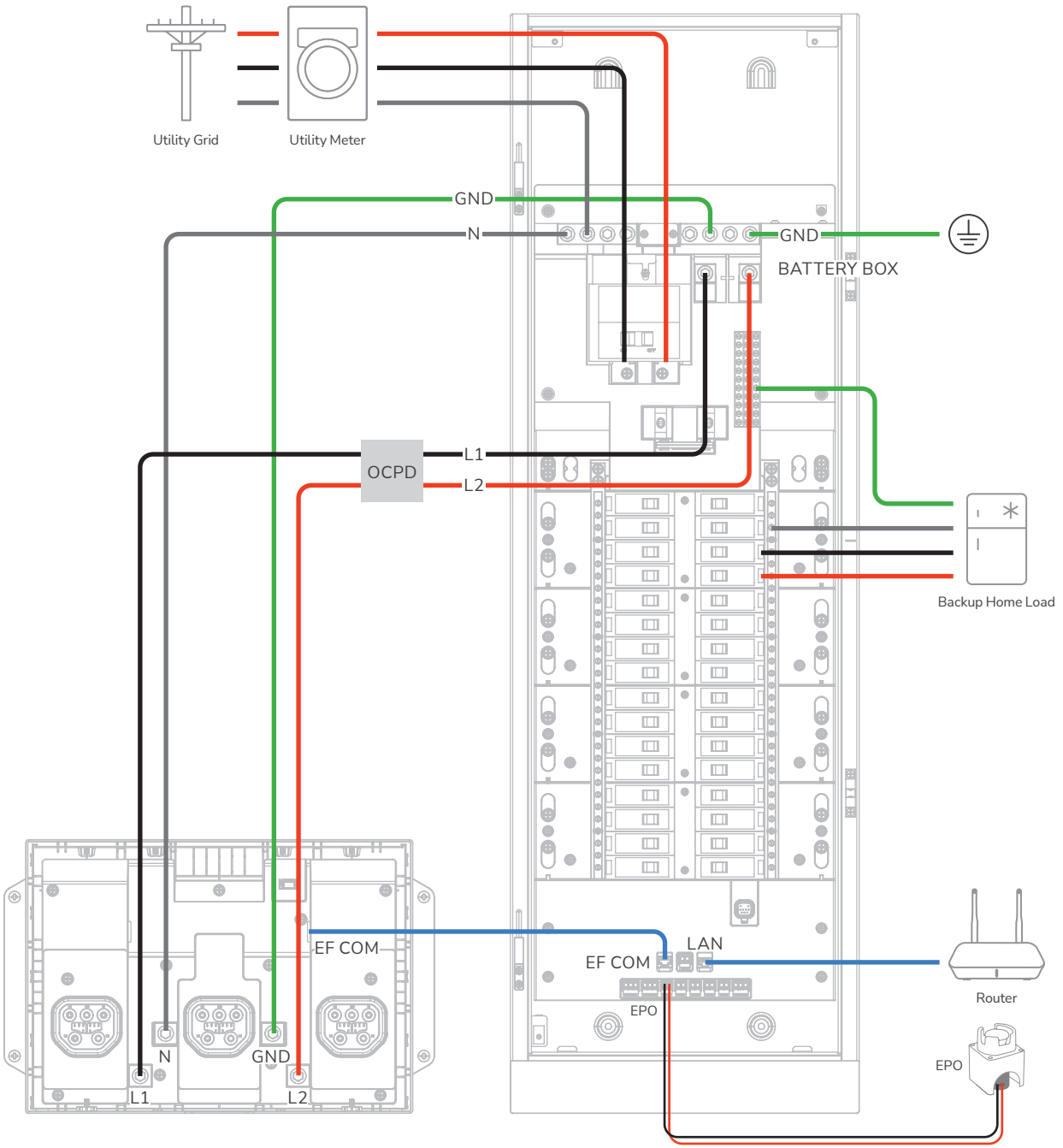

Step 4: Re-Install the Cover of the Inlet Box

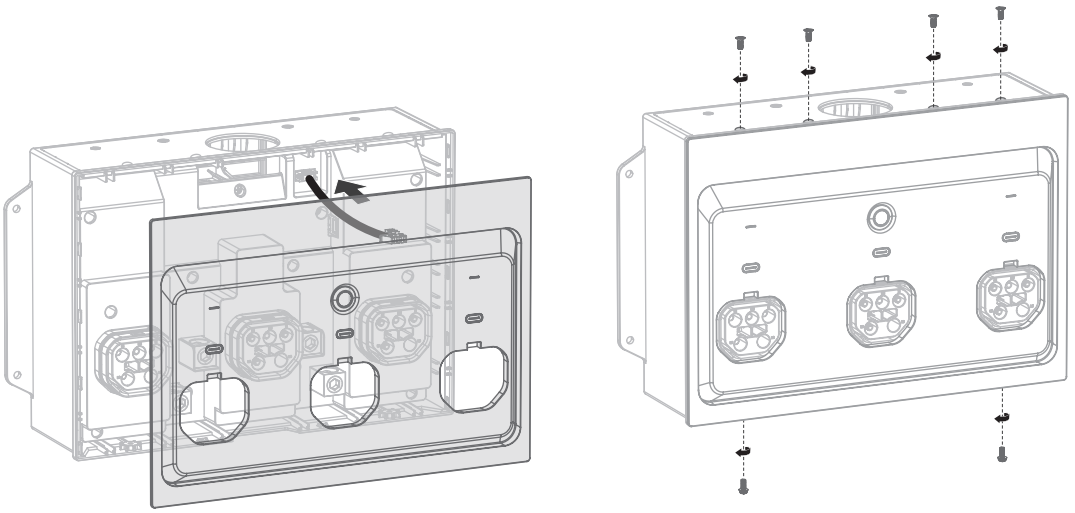

Step 5: Install Overcurrent Protection Devices (Optional)

WARNING

- Install Overcurrent Protection Devices (OCPD) between the box and battery storage, according to the local regulation.

For EcoFlow DELTA Pro Ultra (max. 3 units)

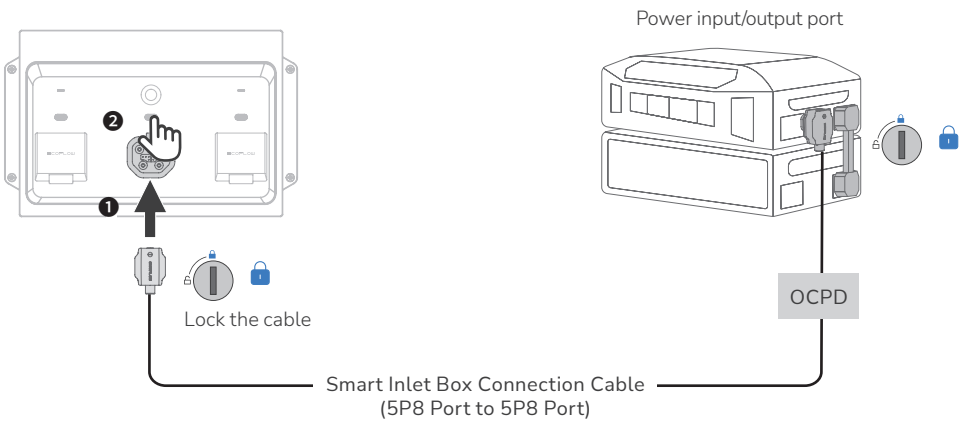

For EcoFlow DELTA Pro 3 (max. 3 units)

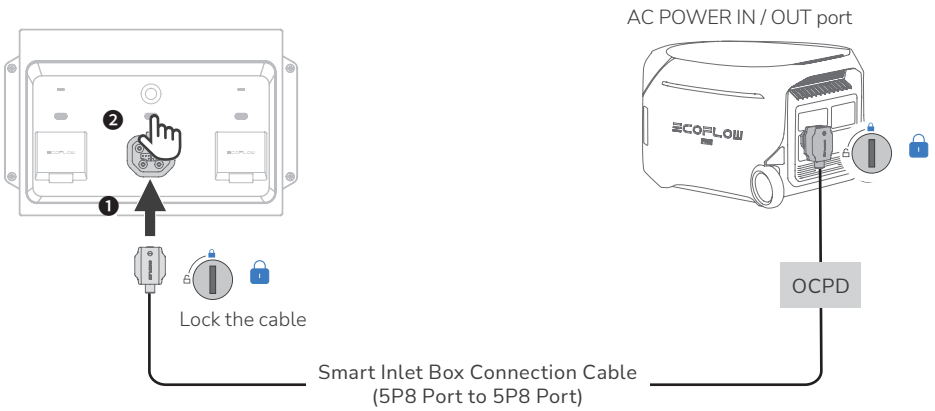

Completing Installation

1. Check the connection.

   - [ ] Confirm that all connections are correct, properly grounded, and secure.
   - [ ] Confirm that all screws are tightened.
   - [ ] Use a multimeter in continuity setting to make sure that the hot wire is not short circuited to neutral.
   - [ ] Use a multimeter in continuity setting to make sure that the hot wire is not short circuited to ground.

2. Remove twist-outs for the main circuit breaker and branch circuit breaker on the deadfront cover.
   Fill any unused open spaces on the cover.

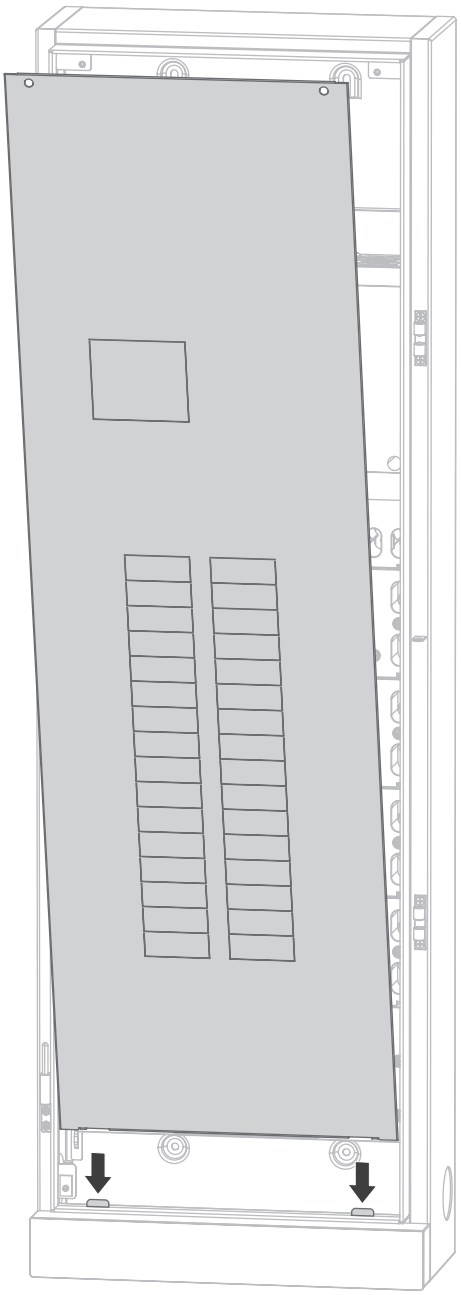

3. Install the deadfront cover.
4. Install the door.
   Then, slide down the glass door onto the hinges. Lock the panel if necessary.
5. Energize the panel.
   Before energizing, ensure that main and branch circuit breakers are in the OFF position.
   To energize, first turn ON the main breaker, and then turn ON each branch circuit breaker.
   Check the indicators of the smart inlet box to ensure the system operates properly. If the error icon exists, check the EcoFlow app for troubleshooting.

Reset Relays If Failure Occurs

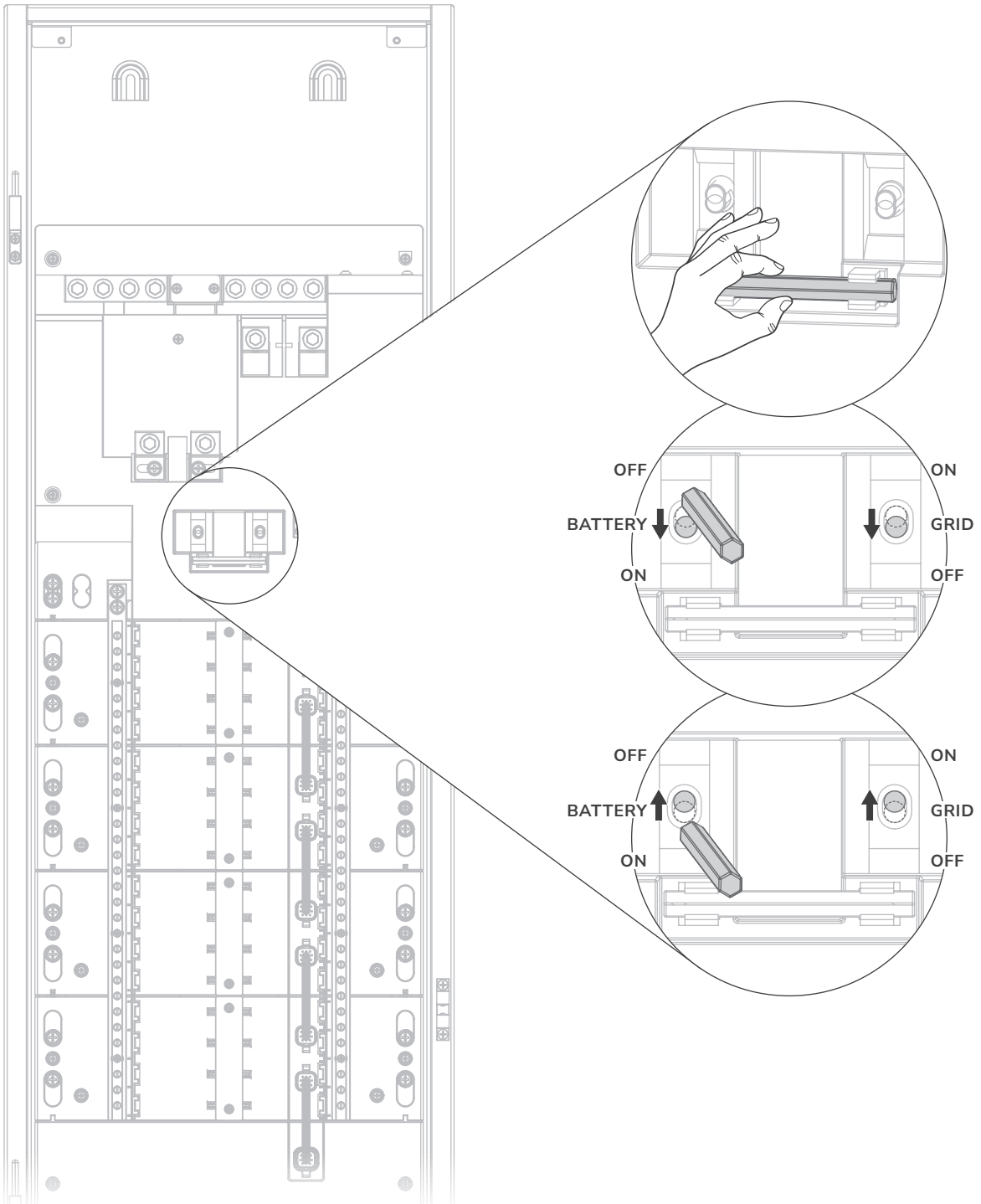

Energizing after the Whole System Installation

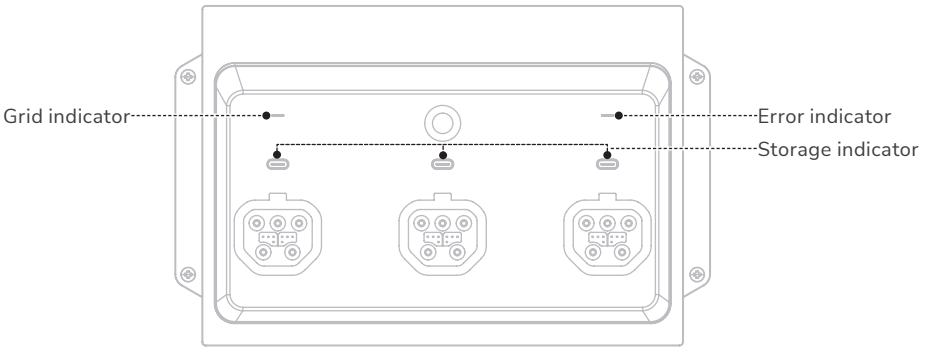

Indicator	Status		Description
GRID	○	Solid white	Grid voltage is detected
		Blinking red	Grid overvoltage or overfrequency
	●	Solid red	Grid voltage is not detected
AC1/AC2/AC3 (Storage)	●	Solid green	Powering your home appliances
		Breathing green	Standby
	●	Solid yellow	Charging
		Blinking red	Error
	●	Solid red	
ERROR	●	Solid red	System error
	●	Off	No system error

*If there is an error, please view the error description and troubleshoot it in the EcoFlow app.

System Commissioning

System Commissioning via EcoFlow App

1 **DOWNLOAD AND INSTALL ECOFLOW APP**

Scan the QR code or download at:
https: //download.ecoflow.com/app

2 **CREATE ACCOUNT AND LOG IN**

After the account is created, enter the account and password.

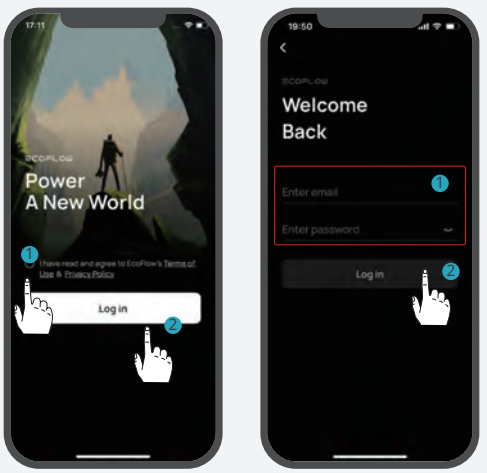

3 ADD SYSTEM AND SET UP INTERNET

Add the portable power station and smart home panel 2 manually or using Bluetooth.

• Via Wi-Fi

Select WiFi select the appropriate network and enter the password.

• Via Ethernet

Connect the system to a router using a network cable in the DHCP or Static mode.
- In the default DHCP mode, the device obtains IP address automatically (recommended).
- In the Static mode, network administrator (homeowner) should set a valid IP address to the device. To avoid IP address conflict, check the IP addresses of other devices on the network by accessing router's settings.

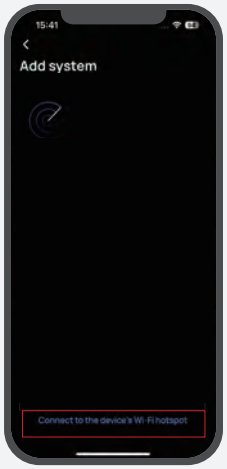

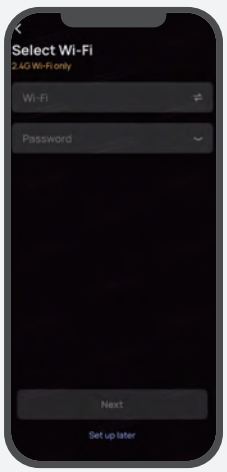

4 COMMISSIONING

There are 5 steps for commissioning. Steps 1-4 are shown below, and step 5 is setting check. Settings include home location, grid voltage and frequency, current of the main circuit, split-phase circuits, the maximum circuit current of each circuit.

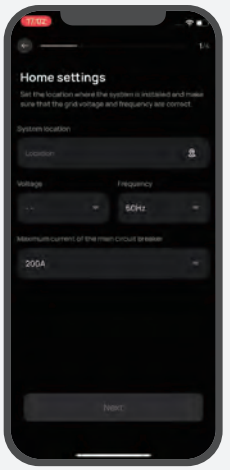

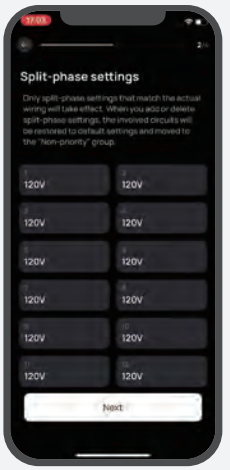

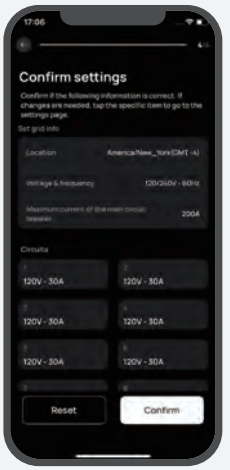

5 CHECK THE FIRMWARE FOR UPDATE

After configuring and entering the system main page, check for the latest firmware update. If any, make sure the firmware is up to date.

6 VALIDATE APP CONTROL

Check whether the EcoFlow app can control the system properly, or whether the operation mode can be switched.

Circuit Breaker Compatibility

NOTICE

- This product has been evaluated for use with the branch circuit breaker types listed below in accordance with the UL Standard for Panelboards.

Main Circuit Breaker

Brand	Model	Rated Current
EATON	CSR	100-200A

Branch Circuit Breaker

- **EATON**

Type	Amp	Catalog Number	Pole
General circuit breakers type BR	10-125	BR or BRH; followed by 110 to 2125	1-pole and 2-pole
Duplex (tandem) circuit breakers type BD	10-50	BD followed by 1010 to 5050	1-pole
Quadplex (tandem) circuit breakers type BQ and BQC	15-50	BQ followed by 215215 to 2502120	1-pole and 2-pole
Combination arc fault circuit interrupter circuit breakers type BR	10-20	BRC, BRN or BRL followed by 110 to 120; followed by AF or CAF (pigtail only)	1-pole and 2-pole
Ground fault circuit interrupter circuit breakers type GFTCB and GFEP	10-60	BRN, GFTCB, BRHN, or GFTCBH followed by 110 to 260; may be followed by GF (pigtail only)	1-pole and 2-pole
Ground fault equipment protection circuit breakers type GFEP	15-50	BRN or GFEP followed by 115 to 250; may be followed by EP (pigtail only)	1-pole and 2-pole
Dual function combination ground fault and arc-fault protection circuit breakers type BR	10-20	BRN or BRAFGF followed by 110 to 120; may be followed by DF (pigtail only)	1-pole

- **SQUARE D**

Type	Amp	Catalog Number	Pole
General circuit breakers type HOM	10-125	HOM followed by 110 to 2125	1-pole and 2-pole
Tandem circuit breakers type HOMT	10-30	HOMT followed by 1010 to 3020	1-pole
Quad tandem circuit breakers type HOMT	15-50	HOMT followed by 1515215 to 2020250	1-pole and 2-pole
Quad tandem circuit breakers type HOMT	15-50	followed by 110 to 220; may be followed by P; followed by CAFI	2-pole
Combination arc-fault circuit interrupter circuit breakers type HOM-CAFI	10-20	HOM followed by 110 to 220; may be followed by P; followed by CAFI	1-pole and 2-pole
Ground fault circuit interrupter circuit breakers type HOM-GFI	10-50	HOM followed by 110 to 250; may be followed by P; followed by GFI	1-pole and 2-pole
Ground fault equipment protection circuit breakers type HOM-EPD	15-50	HOM followed by 115 to 250; followed by EPD	1-pole and 2-pole
Dual function combination ground fault and arc-fault protection circuit breakers type HOM-DF	10-20	HOM followed by 110 to 120; may be followed by P; followed by DF	1-pole

- **SIEMENS**

Type	Amp	Catalog Number	Pole
General circuit breakers type QP	10-125	Q followed by 110 to 2125; may be followed by H	1-pole and 2-pole
Duplex (tandem) circuit breakers type QT	10-30	Q followed by 1010 to 3030 may be followed by NC	1-pole
Triplex (tandem) circuit breakers type QT	10-30	Q followed by 21010 to 23030; followed by CT	1-pole and 2-pole
Quadplex (tandem) circuit breakers type QT	15-40	Q followed by 21515 to 24040; followed by CT2	2-pole
Branch-feeder arc-fault circuit interrupter circuit breakers type QAF2	15-20	QA followed by 115 to 120; followed by AF; may be followed by H (pigtail only)	1-pole and 2-pole
Combination arc-fault circuit interrupter circuit breakers type QAF and QAF2	10-20	Q or QA followed by 115 to 120; followed by AFC; may be followed by H (pigtail only)	1-pole and 2-pole
Tandem combination arc-fault circuit interrupter circuit breakers type CAFCI	10-20	Q followed by 1010 to 2020; followed by AFC (pigtail only)	1-pole
Ground fault circuit interrupter circuit breakers type QPF and QPF2	10-60	QF followed by 110 to 260; followed by A; may be followed by H (pigtail only)	1-pole and 2-pole
Ground fault equipment protection circuit breakers type QE	15-60	QE followed by 115 to 260; may be followed by H (pigtail only)	1-pole and 2-pole
Dual function combination ground fault and arc-fault protection circuit breakers type QFGA2	10-20	Q followed by 110 to 120; followed by DF; may be followed by H (pigtail only)	1-pole

- **GE**

Type	Amp	Catalog Number	Pole
General circuit breakers type THQL, THHQL	15-125	THQL followed by 1115 to 2115;	1-pole and 2-pole
Ground fault circuit interrupter circuit breakers type THQL, THHQL	15-50	THQL or THHQL followed by 1115 to 2150, followed by GFT (pigtail only)	1-pole and 2-pole
Combination arc-fault circuit interrupter circuit breakers type THQL	15-20	Followed by AF (pigtail only)	1-pole and 2-pole
Dual function combination ground fault and arcfault protection breakers type THQL,THHQL	15-20	THQL or THHQL followed by 1115 to 1120, Followed by DF, (pigtail only)	1-pole