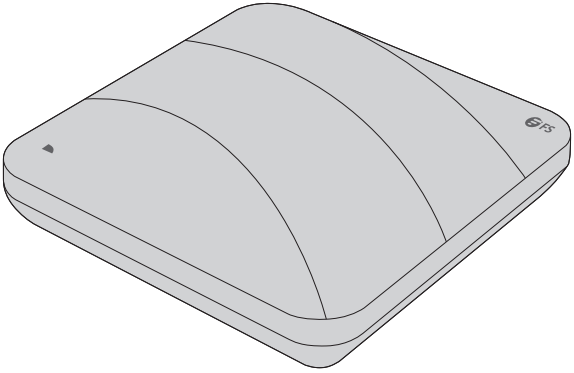

ENTERPRISE WI-FI 6 ACCESS POINT

Quick Start Guide V1.0

Introduction

Thank you for choosing the enterprise Wi-Fi 6 access point. This guide is designed to familiarize you with the layout of the access point and describes how to deploy the access point in your network.

AP-N505L

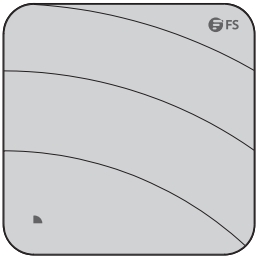

AP-W6T3267C/AP-W6Q4134C
AP-W6T6817C/AP-W6T10000C

Accessories

AP-N505L

Power Cord x1

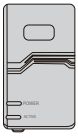

Power Injector x1

Screw x2

Screw Anchor x2

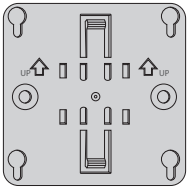

Mounting Bracket x1

AP-W6T3267C/AP-W6Q4134C/AP-W6T6817C/AP-W6T10000C

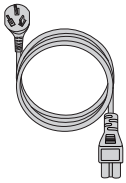

Power Cord x1

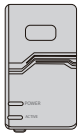

Power Injector x1

Screw x4

Screw Anchor x4

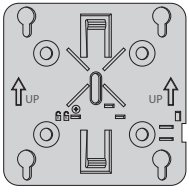

Mounting Bracket x1

Hidden Lock's Key x1

Optional (Not Included)

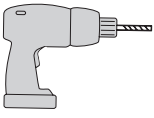

Portable Hammer Drill x1

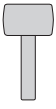

Rubber Hammer x1

Screwdriver x1

Marker x1

Hardware Overview

Ports

AP-N505L

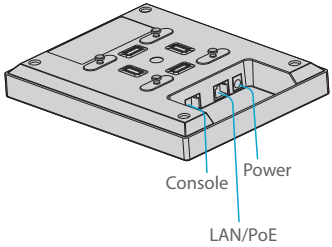

AP-W6T3267C/AP-W6T6817C

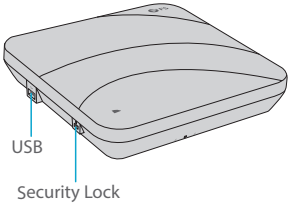

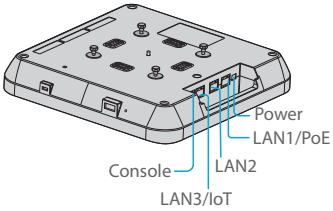

AP-W6Q4134C

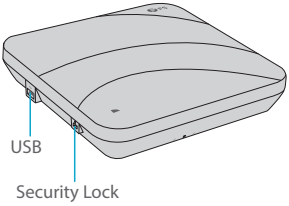

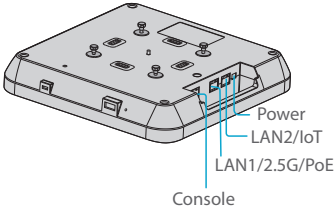

AP-W6T10000C

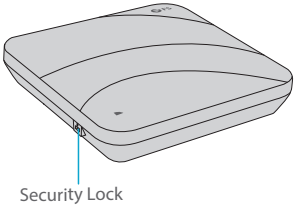

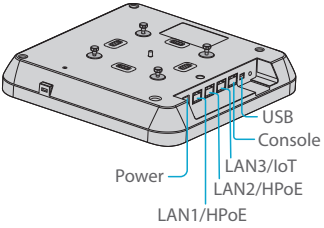

Ports	Description
LAN/PoE	LAN/PoE port
LAN1/PoE	LAN1/PoE port
LAN1/HPoE	LAN1/HPoE port
LAN1/2.5G/PoE	LAN1/2.5G/PoE port
LAN2	LAN2 port
LAN2/HPoE	LAN2/HPoE port
LAN2/IoT	LAN2/IoT port
LAN3/IoT	LAN3/IoT port
Security Lock	Anti-theft lock hole
Console	An RJ45 console port for serial management
USB	A USB management port for software and configuration backup and offline software upgrade
Power	48V DC power port

Button

AP-N505L

AP-W6T3267C/AP-W6Q4134C/AP-W6T6817C

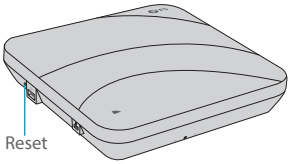

AP-W6T10000C

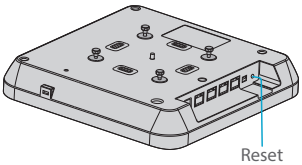

Button	Description
Reset	Restart: Press the Reset button for less than three seconds.
	Restore to Factory Default Settings: Press and hold the Reset button for more than three seconds.

LEDs

AP-N505L

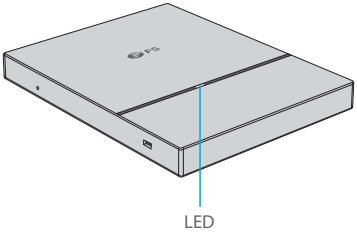

AP-W6T3267C/AP-W6Q4134C/AP-W6T6817C/AP-W6T10000C

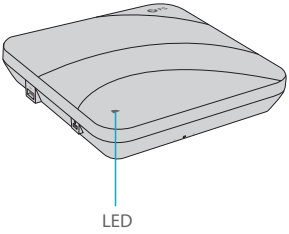

FIT AP:

Status	Frequency	Description
Off	N/A	The AP is not receiving power, or the AP is in Do Not Disturb mode, which can be disabled by software.
Blinking Green	3Hz	UBoot program initialization in progress.
Solid Green	N/A	Main program initialization in progress.
Blinking Red	1.5Hz	Initialization is complete, but the Ethernet link is down.
	2Hz	Locates the AP-N505L.
Double Blinking Red	3Hz (on and off for 2 cycles alternately)	Locates the AP-W6T3267C/AP-W6Q4134C AP-W6T6817C/AP-W6T10000C.
Solid Orange	N/A	Initialization is complete, and the AP is establishing a CAPWAP connection with a wireless LAN controller.
Blinking Orange	3Hz	Firmware upgrade in progress. Do not power off.
Solid Blue	N/A	Normal operation, but no wireless clients are associated with the AP.
Blinking Blue	1.5Hz	Normal operation, at least one wireless client is associated with the AP.

FAT AP:

Status	Frequency	Description
Off	N/A	The AP is not receiving power, or the AP is in Do Not Disturb mode, which can be disabled by software.
Blinking Green	3Hz	UBoot program initialization in progress.
Solid Green	N/A	Main program initialization in progress.
Blinking Red	1.5Hz	Initialization is complete, but the Ethernet link is down.
Solid Blue	N/A	Normal operation, but no wireless clients are associated with the AP.
Blinking Blue	1.5Hz	Normal operation, at least one wireless client is associated with the AP.

NOTE: Hz indicates the number of times a flashing light blinks per second.

Installation Requirements

- Install the AP indoors.
- Make sure the floor of the installation site is dry and flat.
- Place the AP in a dry area and avoid liquid intrusion.
- Keep the AP and installation tools away from walkways.
- Do not power the AP during installation.
- Install the AP in a well-ventilated location.
- Keep away from high voltage cables.
- Keep the AP clean and dust-free.

Mounting the Access Point

Ceiling Mount

AP-N505L

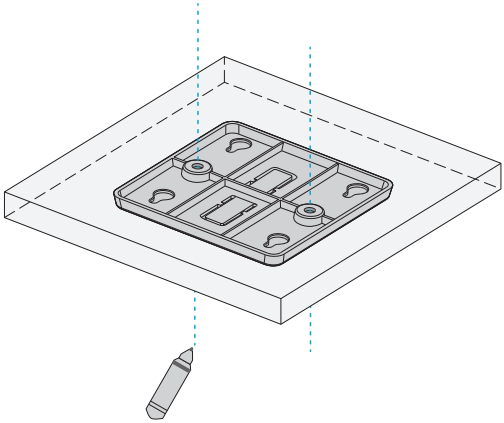

1. Position the mounting bracket at the desired location on the ceiling. Use a marker to mark the two mounting holes.
2. Drill holes with a diameter of 6 mm (0.24 in) in the marked locations.

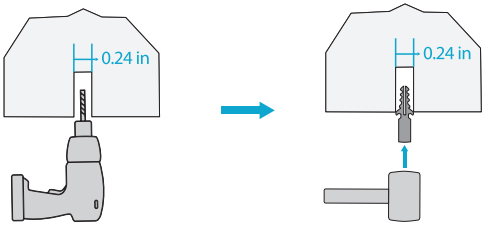

3. Insert a screw anchor into each hole, and tap the screw anchor with a rubber hammer.

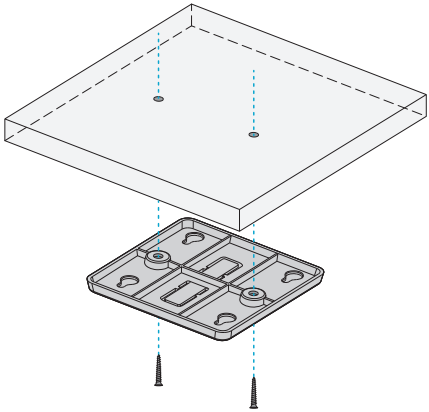

4. Secure the mounting bracket to the ceiling by inserting the screws into the anchors.

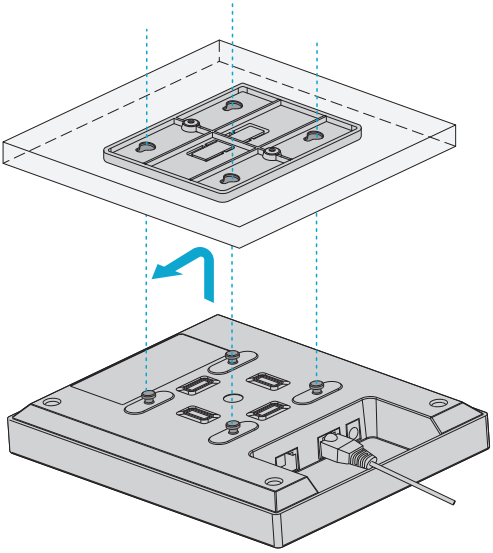

5. Align the tabs on the AP bracket into the notches on the ceiling bracket, and then slide the AP until it snaps into place.

NOTE: 1. Before mounting the AP on the bracket, you must first install the Ethernet cables.

2. The tabs should fit easily into the mounting slots. Do not forcibly push the AP into the slots.

3. After installation, verify that the AP is securely fastened.

4. The wall mount installation is the same as the ceiling mount.

(Optional) Securing the AP

AP-W6T3267C/AP-W6Q4134C/AP-W6T6817C/AP-W6T10000C

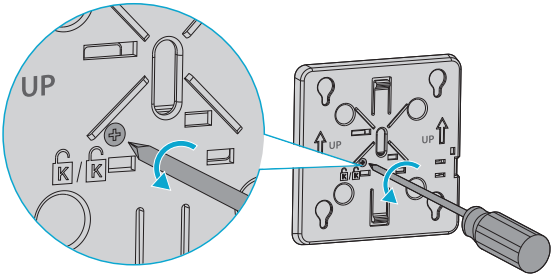

1. Remove the screw on the mounting bracket and engage the hidden lock.

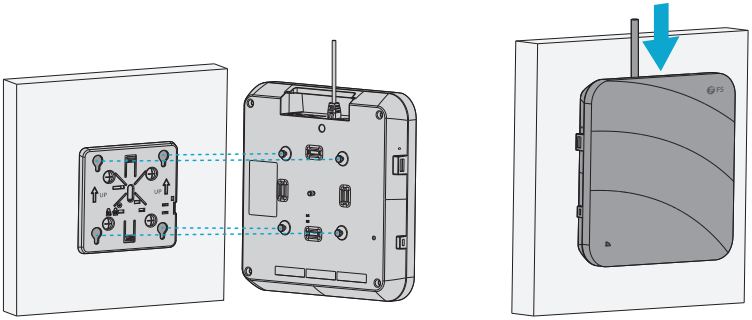

2. Align the tabs on the AP bracket into the notches on the bracket, and then slide the AP until it snaps into place.

Removing the AP

AP-N505L

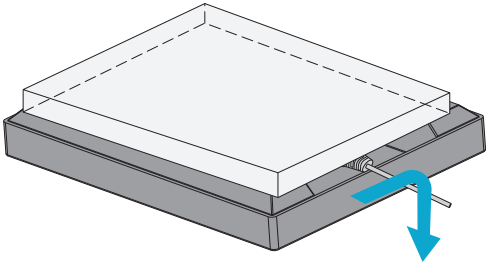

Hold the AP in your hands and push it sideward to release the tab from the notch.

AP-W6T3267C/AP-W6Q4134C/AP-W6T6817C/AP-W6T10000C

1. If the hidden lock is enabled, attach the front part of the key to the edge of the mounting bracket.

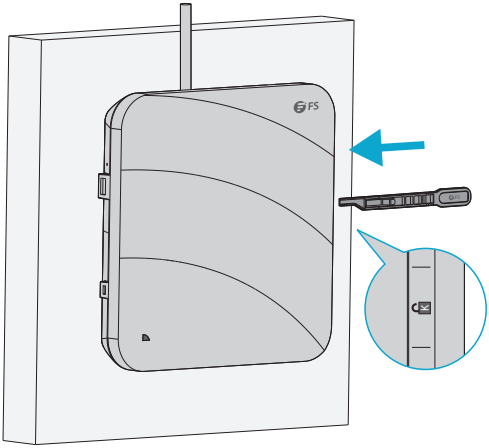

2. Attempt to insert the key into the keyhole along the keyhole mark.

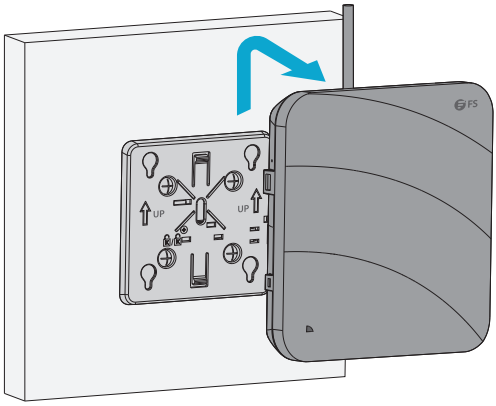

3. Hold the AP in your hands and push it sideward to release the tab from the notch.

Connecting the PoE Power Supply

PoE Switch

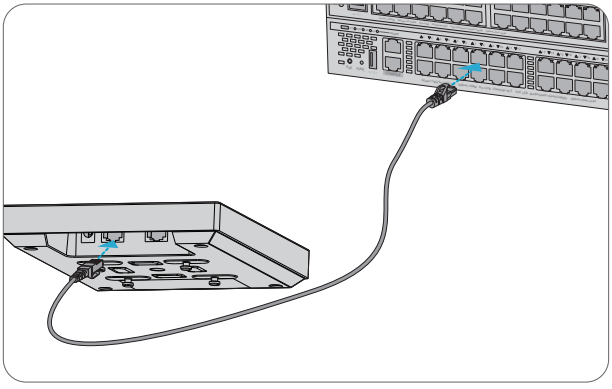

Use an Ethernet cable to connect the Ethernet port on the AP to the PoE port on a PoE switch.

PoE Injector

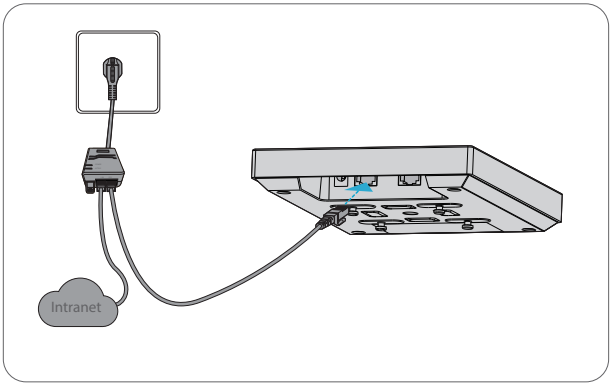

Use the power cord, power injector and Ethernet cable to connect the PoE port of the AP to the local power source.

Configuring the Access Point

Configuring the AP Using the Web-based Interface

Step 1: Connect the computer to the business port of the AP using the network cable.

Step 2: Set the IP address of the computer to **192.168.1.x**. ("x" is any number from 2 to 254.)

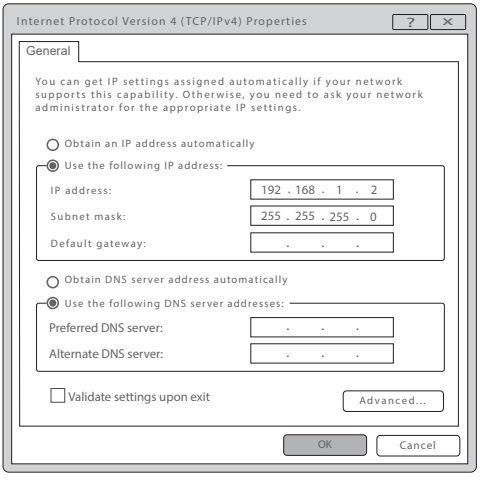

Step 3: Open a browser, type **http://192.168.1.1**, and enter the default username and password, **admin/admin**.

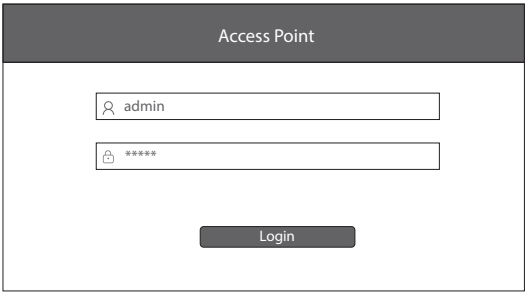

Step 4: Click **Login** to display the web-based configuration page.

Step 5: Click the **System Mode Switch** to switch the FIT/FAP working mode.

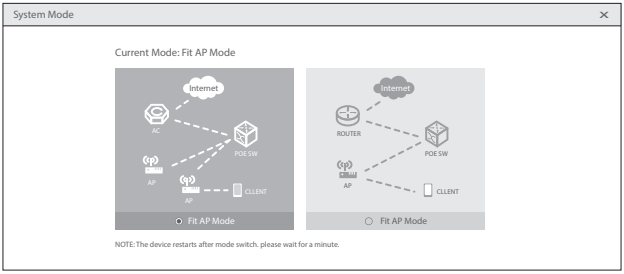

NOTE: The access points work in Fit AP Mode by default.

Configuring the AP Using the Console Port (FAT AP Mode)

Step 1: Connect a computer to the AP's console port using the console cable.

Step 2: Start the terminal simulation software such as HyperTerminal on the computer.

Step 3: Set the parameters of the HyperTerminal: 9600 bits per second, 8 data bits, no parity, 1 stop bit and no flow control.

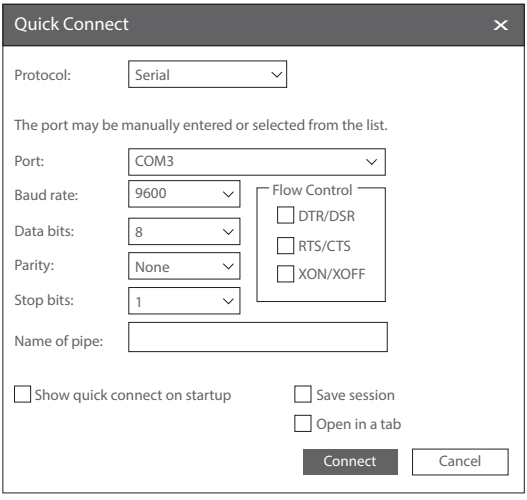

Step 4: After setting the parameters, click **Connect** to enter. And then enter the default password, **admin.**

NOTE: For more details, please refer to the Configuration Guide on the website.

Troubleshooting

The screen displays request timed out

1. Check if the network cable is intact.
2. Check if the hardware connection is correct.
3. The system status indicator on the device panel and the NIC indicator on the computer must be lit.
4. The computer's IP address setting is correct.

LED does not light up after the AP is powered on

1. If you use PoE power supply, verify that the power source is IEEE 802.11af/at compliant, then verify that the cable is properly connected.
2. If you use a power adapter, verify that the power adapter is connected to an active power outlet; then verify that the power adapter works properly.

Ethernet port is not working after the Ethernet port is connected

Verify that the device at the other end of the Ethernet cable is working properly. And then verify that the Ethernet cable is capable of providing the required data rate and is properly connected.

Wireless client cannot find the AP

1. Verify that the power supply works properly.
2. Verify that the Ethernet port is properly connected.
3. Verify that the AP is correctly configured.
4. Move the client device to adjust the distance between the client and the AP.

Support and Other Resources

- Download **https://www.fs.com/download.html**
- Help Center **https://www.fs.com/service/help_center.html**
- Contact Us **https://www.fs.com/contact_us.html**

Product Warranty

FS ensures our customers that any damage or faulty items due to our workmanship, we will offer a free return within 30 Days from the day you receive your goods. This excludes any custom made items or tailored solutions.

Warranty: The Wi-Fi 6 wireless access points enjoy 3 years limited warranty against defect in materials or workmanship. For more details about warranty, please check at https://www.fs.com/policies/warranty.html

Return: If you want to return item(s), information on how to return can be found at https://www.fs.com/policies/day_return_policy.html

15.19:

This device complies with part 15 of the FCC rules. Operation is subject to the following two conditions:
(1) this device may not cause harmful interference, and
(2) this device must accept any interference received, including interference that may cause undesired operation.

15.21:

The grantee is not responsible for any changes or modifications not expressly approved by the party responsible for compliance. Such modifications could void the user's authority to operate the equipment.

15.105(b):

This equipment has been tested and found to comply with the limits for a Class B digital device, pursuant to part 15 of the FCC Rules. These limits are designed to provide reasonable protection against harmful interference in a residential installation. This equipment generates uses and can radiate radio frequency energy and, if not installed and used in accordance with the instructions, may cause harmful interference to radio communications. However, there is no guarantee that interference will not occur in a particular installation. If this equipment does cause harmful interference to radio or television reception, which can be determined by turning the equipment off and on, the user is encouraged to try to correct the interference by one or more of the following measures:
- Reorient or relocate the receiving antenna.
- Increase the separation between the equipment and receiver.
-Connect the equipment into an outlet on a circuit different from that to which the receiver is connected.
-Consult the dealer or an experienced technician for help.

This equipment complies with FCC radiation exposure limits set forth for an uncontrolled environment. This equipment should be installed and operated with minimum distance 20cm between the radiator and your body.

Q.C. PASSED

Copyright © 2020 FS.COM All Rights Reserved.