INNOTRIK®

便携式麦克风扬声电话

使用说明书

(请在使用前仔细阅读本说明书)

公司名称: 深圳市音络科技有限公司
公司地址: 深圳市宝安区新安街道灵芝园社区22区勤诚达乐园13号楼1302-1307号
公司网址: www.innotrik.com
产品类别: 音视频会议电话终端
执行标准: 企业标准号 Q/YL 001-2019
咨询电话: 400077966

产品概述

便携式麦克风扬声电话是一款连接电脑等智能设备的高品质网络会议电话设备，具有回声抵消和环境降噪的最新一代语音处理算法，通话音质清晰自然，机身轻便、机与线一体，便于携带，安装操作方便，适用于电脑网络会议电话等应用场景。

设备介绍

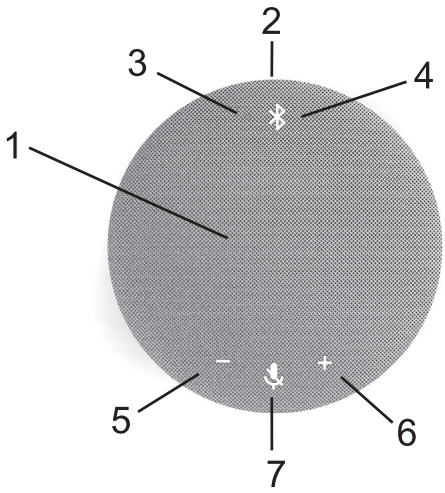

(1)扬声器 (2)麦克风 (3)蓝牙状态指示灯 (4)蓝牙键 (5)音量减少键
(6)音量增加键 (7)麦克风静音键 (8)机线一体USB接口 (9)防滑脚垫
(10)三组状态指示灯 (11)电源开关键

说明：(3)、(4)和(11)点仅蓝牙版机型具有的功能。

包装清单

主机

使用说明书

设备连接

1. **主机USB数据线连接：** 主机的USB线插入电脑设备的USB接口，驱动程序会自动安装，安装成功后电脑设备屏幕会提示准备就绪或本设备可以使用了，这时主机状态指示灯绿灯常亮，表示已经连接。

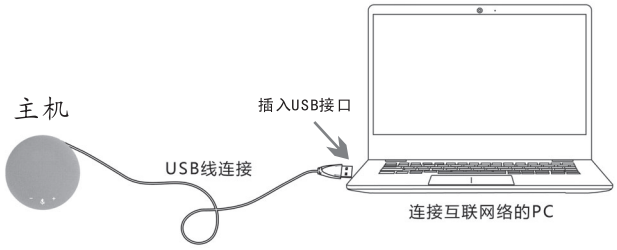

2. **主机蓝牙无线连接（仅适用于蓝牙版机型）：** 按主机开关机键，首次上电开机，蓝牙指示灯连续快闪，等待连接，当和电脑智能设备连接成功后，转为慢闪。蓝牙指示灯如熄灭进入休眠状态，可以按蓝牙键唤醒，长按蓝牙键可以清除当前的蓝牙连接。

说明:电脑智能设备需要具有蓝牙功能或安装有蓝牙适配器。

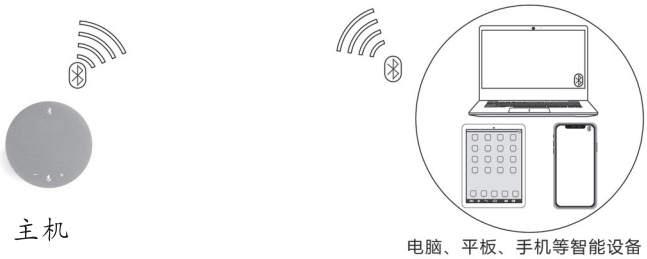

操作说明

1.USB接口有线连接的应用:

1.1 主机USB有线连接成功后，就可以采用电脑中的即时通或网络电话应用软件(如：QQ、Skype等)，按照此应用软件的操作方法，就能进行网络电话会议。

1.2 喇叭音量调整：通话时，依次按下主机的“音量减小”按键，可以逐渐减小喇叭的音量直到最小（绿灯如保持闪烁表示喇叭静音）；依次按下“音量增加”按键，可以逐渐增加喇叭的音量直到最大。

1.3 麦克风拾音和静音：通话时，麦克风默认为拾音状态，按一下主机“麦克风静音”键，状态指示灯亮起红灯，表示麦克风静音；再按一次此键，红灯熄灭，表示恢复麦克风拾音。

操作说明

2. 蓝牙无线连接的应用（仅适用于蓝牙版机型）：

2.1 主机蓝牙无线连接成功后，就可以采用电脑中的即时通或网络电话应用软件(如：QQ、Skype等)，按照此应用软件的操作方法，就能进行网络电话会议。
2.2 如主机和手机蓝牙连接时，除手机按常规拨打电话、接听或挂断电话外，当听到来电声音，也可以短按主机的“开关机键”接听电话；通话时，长按主机的“开关机键”挂断电话。
2.3 喇叭音量调整：通话时，依次按下主机的“音量减小”按键，可以逐渐减小喇叭的音量直到最小（绿灯如保持闪烁表示喇叭静音）；依次按下“音量增加”按键，可以逐渐增加喇叭的音量直到最大。
2.4 麦克风拾音和静音：通话时，麦克风默认为拾音状态，按一下主机“麦克风静音”键，状态指示灯亮起红灯，表示麦克风静音；再按一次此键，红灯熄灭，表示恢复麦克风拾音。
2.5 当状态指示灯如出现橙灯闪烁，时时会反复提醒你内置电池低电量，请及时插入USB电源口充电。
2.6 充电时，指示灯会亮红灯，当内置电池充满电后，红灯会熄灭。
2.7 当有USB有线和蓝牙无线连接使用时，优先使用蓝牙连接。

注意事项

1. 在电脑智能设备上您不能同时连接多个麦克风扬声器设备包括本机设备，通话时可能会产生啸叫。
2. 要求将USB连接线直接连接到电脑设备的USB接口，若通过USB集线器连接可能会引起操作问题。
3. 本设备驱动是否安装连接成功，可以在电脑控制面板选项的声音和音频设备属性中，播放(输出)和录制(输入)的选项里查看默认设备是否显示“本机设备型号”，否则就要重新选择“本机设备型号”，并确认。
4. 使用过程中，如有必要可以通过电脑端的扬声器选项调节音量大小，在使用即时通或网络电话应用软件时,请将本型号设备选择为首选的音频设备。
5. 勿尝试维修本设备，会有触电危险。如存在问题需要维修，请与您的销售商联系。

－－－－－－

INNOTRIK®

Portable Microphone Speaker Phone

Manual

(Please read this manual carefully before use)

Shenzhen Innotrik Technology Co., Ltd.
Company Add: Room 1302-1307, Building No.13, Qinchengda Paradise, District 22, Lingzhiyuan Community, Xin'an Street, Bao'an District, Shenzhen,China.
Website: www.innotrik.com
Product Category: Audio-Video Conference phone Terminal
Enterprise Standard No: Q/YL 001 -2019
Tel: +86-400077966

Overview

The portable microphone speaker phone is the high-quality Internet phone conference call device connected with computers and other intelligent devices. It is provided with the latest generation of voice processing algorithm of acoustic echo cancellation and environmental noise reduction. Its voice quality of the call is clear and natural. Its body is light and the device and cable are integrated, which is easy to carry, install and operate. It is suitable for computer Internet phone conference call and other application scenarios.

About the device

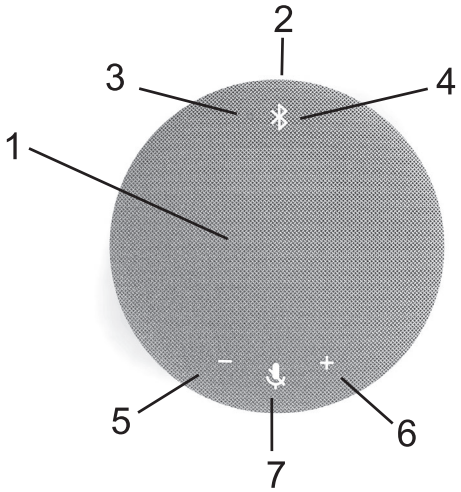

(1) Speaker (2) Microphone (3) Bluetooth status indicator (4) Bluetooth key
(5) Volume decrease key (6) Volume increase key (7) Microphone mute key
(8) USB interface of integrated device and cable (9) Anti-slip foot pad
(10)Three sets of status indicators (11) Power ON/OFF key

Note: (3), (4) and (11) are only available for Bluetooth version.

Packing list

Host

Manual

Device connection

1. Connect USB data cable of the host:

Insert the USB cable of the host into the USB interface of computer, and the driver will be installed automatically. After installation, the computer screen will prompt that it is ready or the device can be used. At this time, the host green indicator is always ON, indicating that it has been connected.

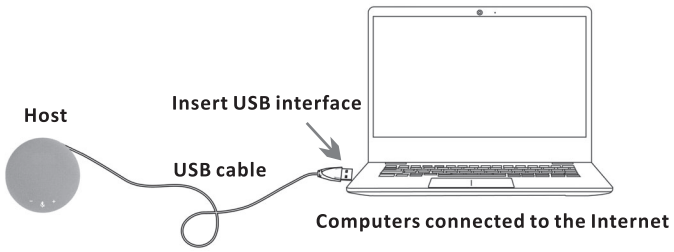

2. Bluetooth wireless connection of the host (only applicable to Bluetooth version):

Press the "Power ON/OFF" key of the host. When power on for the first time, the Bluetooth indicator will flash continuously to wait for connection, and turn to slow flash after connecting with the computer intelligent device. If the Bluetooth indicator goes out and enters the sleep state, press the Bluetooth key to wake up, and long pressing the Bluetooth key can clear the current Bluetooth connection.

Note: the computer intelligent device needs to have Bluetooth function or Bluetooth adapter.

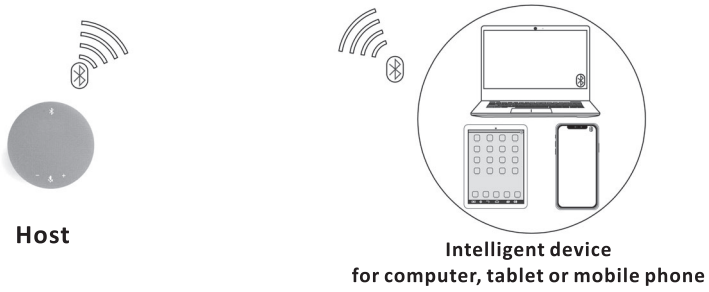

How to operate

1. Application of wired connection of USB interface:

1.1 After the wired connection of USB of the host is successful, the instant messaging or Internet phone application software (such as QQ, Skype, etc.) in the computer can be used.The Internet phone conference can be carried out according to the operation method of the application software.

1.2 Speaker volume adjustment: during a call, press the "Volume decrease" key of the host to gradually decrease the speaker volume to the minimum (Continuous flashing green light means mute speaker); and press the "Volume increase" key to gradually increase the speaker volume to the maximum.

1.3 Microphone pickup and mute: during a call, the microphone is in the pickup state by default. When press the "Microphone mute" key of the host, the status indicator will be red, indicating that the microphone is mute. Press this key again to turn off the red, indicating that the microphone pickup is restored.

How to operate

2. Application of Bluetooth wireless connection (only applicable to Bluetooth version):

2.1 After the Bluetooth wireless connection of the host is successful, the instant messaging or Internet phone application software (such as QQ, Skype, etc.) in the computer can be used. The Internet phone conference can be carried out according to the operation method of the application software.

2.2 When the host is connected with the mobile phone through Bluetooth, in addition to the normal calling, answering or ending of call with the mobile phone, it can also short press the "Power ON /OFF" key of the host to answer the incoming call or long press the "Power ON /OFF" key of the host to end a call.

2.3 Speaker volume adjustment: during a call, press the "Volume decrease" key of the host to gradually decrease the speaker volume to the minimum (Continuous flashing green light means mute speaker); and press the Volume increase key to gradually increase the speaker volume to the maximum.

2.4 Microphone pickup and mute: during a call, the microphone is in the pickup state by default. When press the "Microphone mute" key of the host, the status indicator will be red, indicating that the microphone is mute. Press this key again to turn off the red, indicating that the microphone pickup is restored.

2.5 When the status indicator flashes in orange, it will keep reminding you that the built-in battery is low. Please plug it into the USB power port for charging.

2.6 When charging, the indicator will be red, and when the built-in battery is fully charged, the red will go out.

2.7 Bluetooth connection is preferred when both of USB wired connection and Bluetooth wireless connection are available.

Points for attention

1. You can't connect multiple microphone speakers to the computer intelligent device at the same time, including the native device, or else, a squeak may appear during the call.
2. It is required to connect the USB cable directly to the USB interface of the computer device. It may cause operation problems if it is connected through the USB hub.
3. Check whether the device driver is installed and connected successfully: check whether the default device displays "native device model" in the options of playback (output) and recording (input) of the sound and audio device properties of the computer control panel option, if not, re-select "Native device model" and confirm.
4. When use, it can adjust the volume through the speaker option on the computer if necessary. When using instant messaging or Internet phone application software, please set the device of the model as the preferred audio device.
5. Do not repair the device by yourself, or else, it may cause electric shock. Please contact your seller if there is any problem needing repair.

- - - - - -

FCC Statement

This device complies with part 15 of the FCC rules. Operation is subject to the following two conditions: (1) this device may not cause harmful interference, and (2) this device must accept any interference received, including interference that may cause undesired operation.

Changes or modifications not expressly approved by the party responsible for compliance could void the user's authority to operate the equipment.

NOTE: This equipment has been tested and found to comply with the limits for a Class B digital device, pursuant to part 15 of the FCC Rules. These limits are designed to provide reasonable protection against harmful interference in a residential installation. This equipment generates uses and can radiate radio frequency energy and, if not installed and used in accordance with the instructions, may cause harmful interference to radio communications. However, there is no guarantee that interference will not occur in a particular installation. If this equipment does cause harmful interference to radio or television reception, which can be determined by turning the equipment off and on, the user is encouraged to try to correct the interference by one or more of the following measures:

- Reorient or relocate the receiving antenna.
- Increase the separation between the equipment and receiver.
- Connect the equipment into an outlet on a circuit different from that to which the receiver is connected.
- Consult the dealer or an experienced radio/TV technician for help.

The device has been evaluated to meet general RF exposure requirement. The device can be used in portable exposure condition without restriction.