Electric Vehicle AC Charger

EVM002 Series (NA) - User Manual

此页不印刷

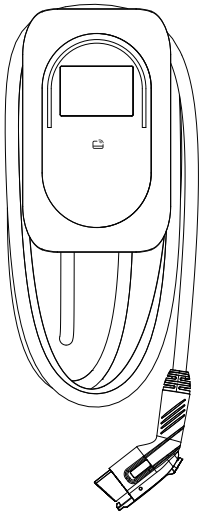

技术要求：
1. 成品规格： 142 x 210 mm；
2. 印刷方式： ☐单面印刷 ； ■双面印刷；
3. 装订方式： ■骑马钉； ☐ 单面对折；
4. 材质： ■70g双胶纸； ☐ 108g铜板纸；
5. 印刷颜色： 单黑色；
6. 有条码的话，刷码等级需达到B级；
7. 检验工具：卷尺，尺寸单位均为mm

				线条图提供者		设计者	
				排版者		审核者	日期
				庄妍妍	2024.09.18		
				文件翻译者		批准者	日期
版本号	修订原因	修订人	修订日期	签名	日期	签名	日期
变更栏							

说明书		视图/ VIEW	
零件名称			
图纸图号			
产品名称	EVM002 Series (NA)		
产品型号			
比例	单位	版次	次料/REG.%
1:1	mm		
Joint 佳因特	厦门佳因特科技有限公司		

Electric Vehicle AC Charger

EVM002 Series (NA) - User Manual

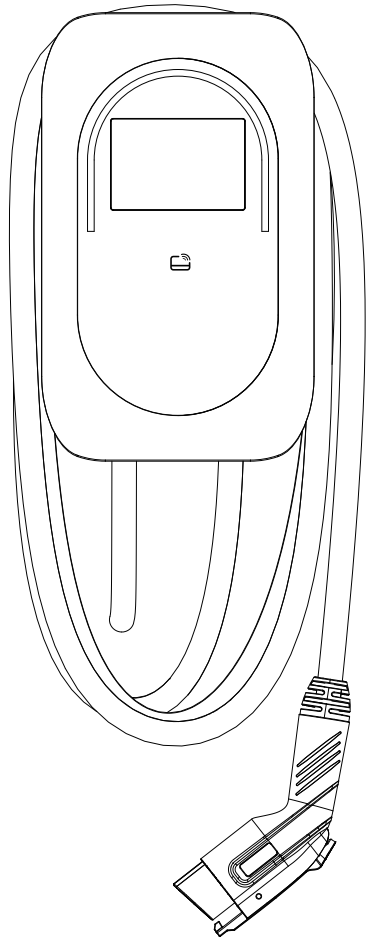

Version 1

USER MANUAL

TABLE OF CONTENTS

1. IMPORTANT SAFETY INSTRUCTIONS 1

2. PRODUCT INTRODUCTIONS 5

3. VERIFY CONTENTS 8

4. GATHER TOOLS 9

5. PLAN THE MOUNTING 10

6. WALL MOUNTING 11

7. WIRE THE CIRCUIT 14

8. LIGHT CODES 18

9. FCC DECLARATION 20

10. WARRANTY AND MAINTENANCE 21

WARNING & CAUTION

1. Important Safety Instructions

1.1 Overall Warnings & Cautions

WARNING: To avoid fire, injury or death, carefully read and follow the instructions during installation, operation and maintenance.

- DO NOT put fingers into the electric vehicle connector.

- DO NOT use this product if the flexible power cord or EV cable is frayed, insulation-broken, or any other signs of damage.

- DO NOT use this product if the enclosure or the EV connector is broken, cracked, open, or shows any other indication of damage.

- DO NOT remove cover or attempt to open the enclosure because of risk of electric shock.

WARNING: This device should be supervised when used around children.

WARNING: This device must be grounded.

WARNING: To avoid a risk of fire or electric shock, do not use this device with an extension cord.

WARNING: The suitability of the use of flexible cord in accordance with CE code, part I, rule 4-012, is to be determined by the local inspection authority.

WARNING: To reduce the risk of fire, connect only to a circuit provided branch circuit over-current protection in accordance with the CSA C22.1–15 Canadian Electrical Code, Part 1 (Canada) or NOM-001-SEDE Electrical installations (utility) (Mexico) or ANSI / NFPA 70 National Electrical Code (USA).

Circuit Breaker Options table						
Output Amperage (A)	16A	32A	40A	48A	70A	80A
Circuit Breaker Options (A)	20A	40A	50A	60A	90A	100A

WARNING & CAUTION

1.2 Installation Requirements

WARNING: Disconnect electrical power prior to installing the charging station.

WARNING: Be sure to preview the user manual and ensure local building and electrical codes are reviewed before installing the AC charger.

WARNING: The AC charger should be installed by a qualified technician according to the user manual and local safety regulations.

CAUTION: Use appropriate protection when connecting to the main power distribution cable.

CAUTION: Type B, C or D breaker with the rating current for table should be installed in the upstream AC distribution box.

CAUTION: The device shall be mounted at height between 2 feet and 4 feet from ground.

CAUTION: Please keep the charger in a clean area with low humidity. Not recommended to be installed in coastal environments with high humidity or high dust.

1.3 Daily Maintenance

CAUTION: Avoid moisture or water in the charger. If there is water or moisture ingress in the charger, it is necessary to immediately power off to avoid immediate danger, and notify the professionals to carry out maintenance before next use.

CAUTION: Please use the charger properly. Do not hit or press hard on the enclosure. If it is damaged, please contact a professional technician.

CAUTION: Avoid placing the charger near hot objects and at high temperature locations and away from dangerous substances such as flammable gases and corrosive materials.

CAUTION: Do not put heavy objects on the charger to avoid danger.

WARNING & CAUTION

Consignes De Sécurité Importantes

1.1 Avertissement & Mise En Garde Généraux

AVERTISSEMENT : Pour éviter les risques d'incendie, de blessure ou de mort, il faut lire et suivre soigneusement les instructions pendant l'installation, l'utilisation et l'entretien.

- Ne mettez pas les doigts dans le connecteur du véhicule électrique.

- N'utilisez pas ce produit si le cordon d'alimentation flexible ou le câble EV est effiloché, isolé ou présentant tout autre signe de dommage.

- N'utilisez pas ce produit si le boîtier ou le connecteur EV est cassé, fissuré, ouvert ou montre toute autre indication de dommage.

Ne retirez pas le couvercle et n'essayez pas d'ouvrir le boîtier en raison du risque de choc électrique.

AVERTISSEMENT : Cet appareil doit être surveillé lorsqu'il est utilisé à proximité d'enfants.

AVERTISSEMENT : Cet appareil doit être mis à la terre.

AVERTISSEMENT : Pour éviter tout risque d'incendie ou de choc électrique, n'utilisez pas cet appareil avec une rallonge électrique.

AVERTISSEMENT : L'adéquation de l'utilisation du cordon flexible conformément au code ce, partie i, règle 4-012, doit être déterminée par l'autorité d'inspection locale compétente.

AVERTISSEMENT : Pour réduire les risques d'incendie, ne connecter qu'à un circuit protection contre les surintensités des circuits de dérivation conformément à la norme canadienne CSA C22.1-15 Code électrique, partie 1 (Canada) ou NOM-001-SEDE Installations électriqu (Mexique) ou ANSI / NFPA 70 National Electrical Code (États-Unis).

Circuit Breaker Options table						
Output Amperage (A)	16A	32A	40A	48A	70A	80A
Circuit Breaker Options (A)	20A	40A	50A	60A	90A	100A

WARNING & CAUTION

1.2 Exigence Avant L'installation

AVERTISSEMENT : Assurez-vous de consulter le manuel d'utilisation et assurez-vousque les codes locaux du bâtiment et de l'électricité sont passés en revue avant d'installer le chargeur.

AVERTISSEMENT : Débranchez l'alimentation électrique avant d'installer la station decharge.

AVERTISSEMENT : Le chargeur CA doit être installé par un technicien qualifié conformément au manuel d'utilisation et aux réglementations de sécurité locales.

MISE EN GARDE : Utilisez une protection appropriée lors de la connexion au câble de distribution d'alimentation principal.

MISE EN GARDE : Un disjoncteur de type B, C ou D avec le courant nominal indiqué dans le tableau doit être installé dans le boîtier de distribution CA en amont.

MISE EN GARDE : Cet appareil doit être monté à une hauteur entre 2 feet and 4 feet du sol.

MISE EN GARDE : Veuillez conserver le chargeur dans un endroit propre et peu humide. Il n'est pas recommandé de l'installer dans des environnements côtiers à forte humidité ou à forte poussière.

1.3 Entretien Quotidien

MISE EN GARDE : Évitez l'humidité ou l'eau dans le chargeur. En cas d'infiltration d'eau ou d'humidité dans le chargeur, il est nécessaire de l'éteindre immédiatement pour éviter tout danger immédiat et d'avertir le personnel professionnel d'effectuer l'entretien avant la prochaine utilisation.

MISE EN GARDE : Veuillez utiliser le chargeur correctement. Ne frappez pas ou n'appuyez pas trop fort sur le boîtier. Si le boîtier est endommagé, veuillez contacter un technicien professionnel.

MISE EN GARDE : Évitez de placer le chargeur à proximité d'objets chauds et à des endroits à haute température et loin de substances dangereuses telles que des gaz inflammables et des matériaux corrosifs.

MISE EN GARDE : Ne placez pas d'objets lourds sur le chargeur pour éviter tout danger.

2. Product Introductions

CAUTION: Avoid placing the charger near hot objects and at high temperature locations and away from dangerous substances such as flammable gases and corrosive materials.

2.1 Basic Interface

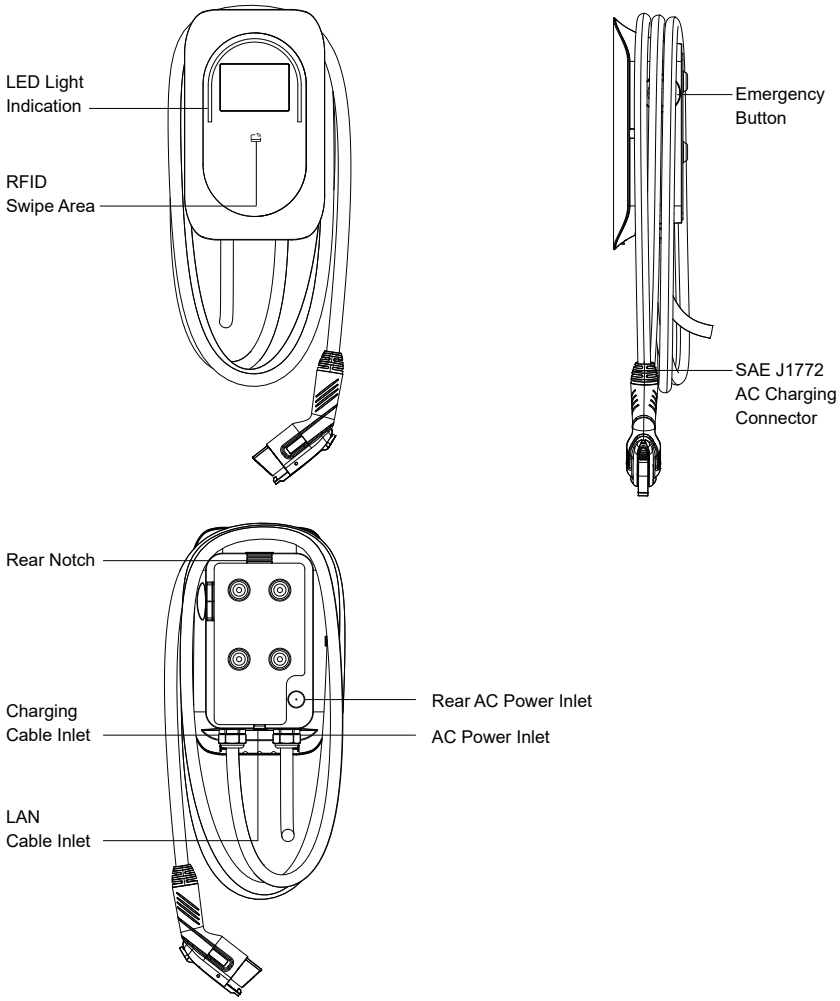

USER MANUAL

2.2 Basic Dimensions

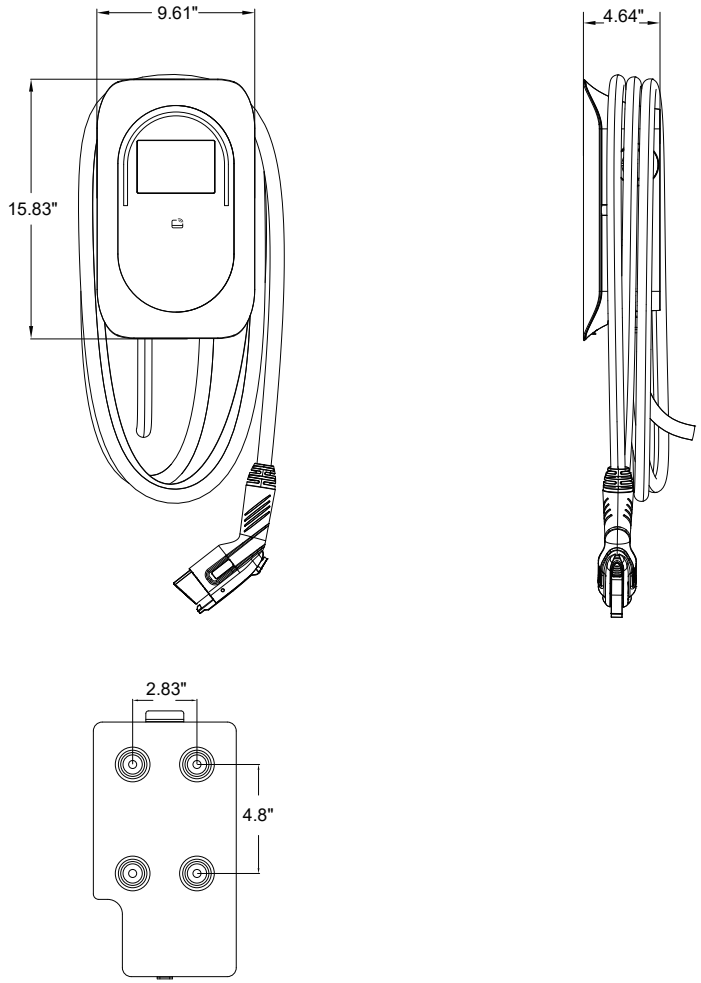

2.3 Specifications

EVM002		
POWER		
Input Rating	208~240V AC	
Output Current&Power	11.5 kW (48A)	19.2 kW (80A)
Power Wiring	L1 / L2 / GND	
Input Cord	Hard-wire	
Mains frequency	50 / 60 Hz	
Connector Type	SAE J1772 Type1 18ft / SAE J3400 NACS 18ft (Optional)	
Ground Fault Detection	CCID 20	
Protection	UVP, OVP, RCD (CCID 20), SPD, Ground Fault Protection, OCP, OTP, Control Pilot Fault Protection	
Meter Accuracy	±1% (CTEP qualified)	
USER INTERFACE		
Status Indication	LED indication	
Screen	4.3' touch screen (UI upgradable)	
Language	English / Spanish / French	
User Interface	Compatible with multiple CPOs	
Connectivity	Bluetooth5.2, Wi-Fi (2.4G / 5G), Ethernet	
Communication Protocols	OCPP2.0.1 / OCPP 1.6Js self-adaptation	
	ISO15118-2/3	
Pile Group Management	Dynamic Load Balancing	
User Authentication	Plug&Charge(Free)、Plug&Charge(PnC)、RFID Card、OCPP	
Card Reader	RFID, ISO14443A、ISO14443B, 13.56MHz	
Software Update	OTA	
CERTIFICATION & STANDARDS		
Safety & Compliance	UL991, UL1998, UL2231, UL2594, ISO15118 (P&C)	
Certification	ETL / FCC / Energy Star	
Warranty	36 months	
GENERAL		
Button	Emergency Button	
Enclosure Rating	NEMA 4 (IP65), IK08	
Operating Altitude	＜6561ft (2000m)	
Operating Temperature	-40°F ~ +131°F (-40°C ~ +55°C)	
Storage Temperature	-40°F ~ +185°F (-40°C ~ +85°C)	
Operating Humidity	5 ~ 95%	
Mounting	Wall mount / Pedestal (optional)	
Product Dimensions	15.83"×9.61"×4.64" (402×244×118mm)	

3. Verify Contents

Ensure you have this installation guide and these parts:

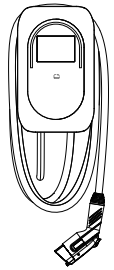

AC Charger ×1

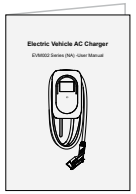

User Manual ×1

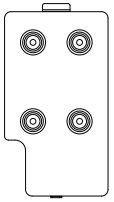

Wall-Mounted Bracket ×1

M4 Anti-Theft Screws ×1

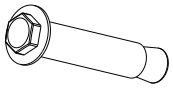

M6 Hexagonal Expansion Screws ×4

Allen Wrench ×1

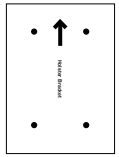

Mounting Template ×1

RFID Card ×2

Cable Ramp ×1

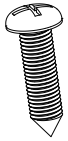

ST3.5*16 Screws ×2

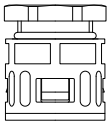

AD34.5 Conduit Fitting ×1

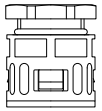

AD21.2 Conduit Fitting ×1

M32 Conduit Fitting ×1

M4 Anti-Theft Round Head Screws ×4 (Spare)

4. Gather Tools

Tools required before installing the Wall-Mounted charger, gather the following tools:

1. Wire stripper
2. Adjustable Wrench
3. Voltmeter or digital multi-meter (for measuring AC voltage at the installation site)
4. Level
5. Pencil or marker
6. Drill
7. Phillips screwdriver

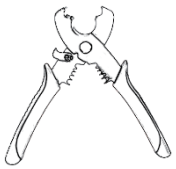

❶

❷

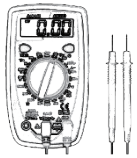

❸

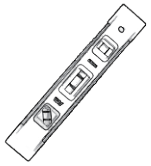

❹

❺

❻

❼

Note: The above tools are very important, please gather them all.

5. Plan The Mounting

WARNING: In areas with frequent thunderstorms, add surge protection at the service panel for all circuits. Ensure all power and ground connections, especially those at the breaker and bus bar, are clean and tight.

CAUTION: Not recommended to be installed in coastal environments with high humidity or high dust.

Select the appropriate mounting location with electri calcapacity:

I. Ensure the owner has chosen a mounting location that allows the charging cable to reach the car’s charging port while still providing slack.

II. The device must be anchored into mounting such as 3.14" x 5.11" stud or a solid wall.

6. Wall mounting

STEP 1

Make sure the installation wall is vertical, and use the Mounting template to drill four screw holes with a diameter of 0.33" (8.5mm) and a depth of 2.17"~2.36" (55mm~60mm) at a height of 47.24"~51.18"(1200-1300mm) from the ground according to the hole positions.

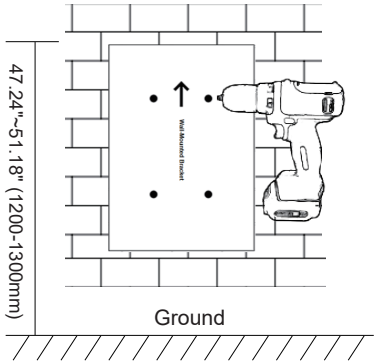

STEP 2

Push the bracket down to remove the wall hanger.

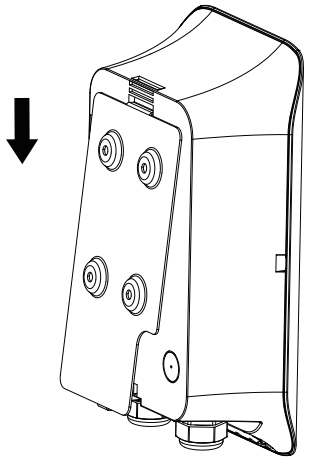

USER MANUAL

STEP 3

Use 4 Hexagonal Expansion Screws to secure the wall-mounted bracket on the wall, Use an wrench to tighten the screw nuts on the expansion screws.

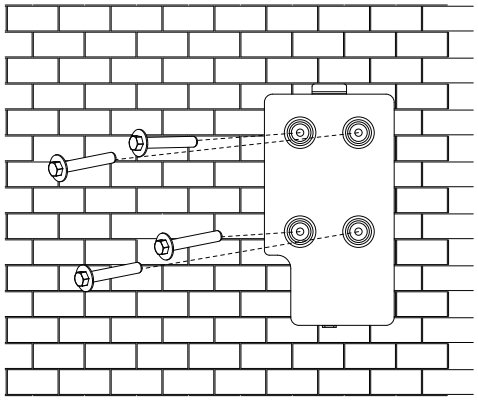

STEP 4

Align the rear notch of charger with the wall-mounted bracket and alignment the screw holes at the bottom, and secure it using M4 Anti-Theft Round Head Screws.

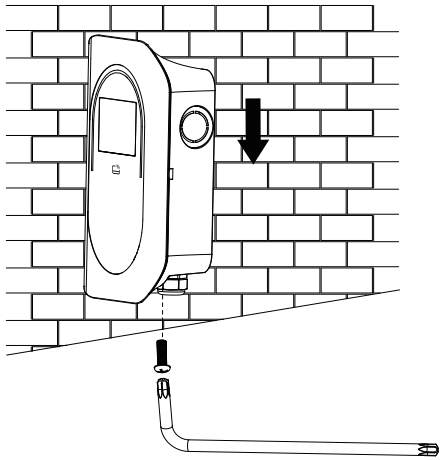

STEP 5

Overall outlook picture after installation:

Wall-mounted cable winding

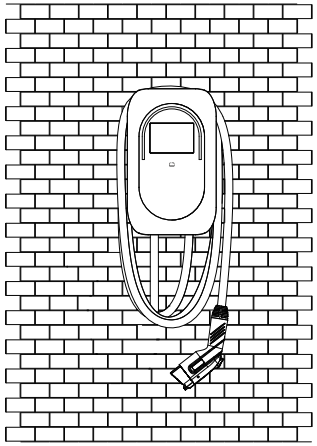

Plug holder (optional)

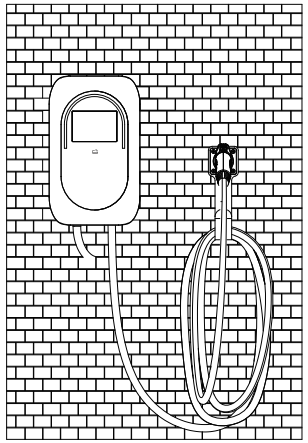

Pedestal (optional)

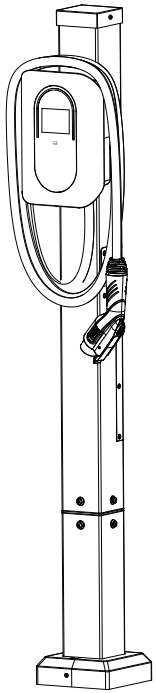

7. Wire The Circuit

WARNING: This device must be grounded. Disconnect electrical power prior to installing the charging station.

WARNING: Improper connection of the equipment-grounding conductor would result in a risk of electric shock. Check with a qualified electrician or serviceman if you are not sure whether the product is properly grounded. Do not modify the plug provided with the product – if it doesn't fit the outlet, have a proper outlet installed by a qualified electrician.

CAUTION: Use appropriate protection when connecting to the main power distribution cable.

This step is only to Hard-wire wiring and requires user-supplied AC input cables.

For safe use of electricity, please set circuit breaker protection in the input part of EV Charger.

Circuit Breaker Options table						
Output Amperage (A)	16A	32A	40A	48A	70A	80A
Circuit Breaker Options (A)	20A	40A	50A	60A	90A	100A

STEP 1

Use a allen wrench to loosen the two screws located at the bottom of the charging station. Open the buckle on both sides and lift up the front cover to remove it from the charging station.

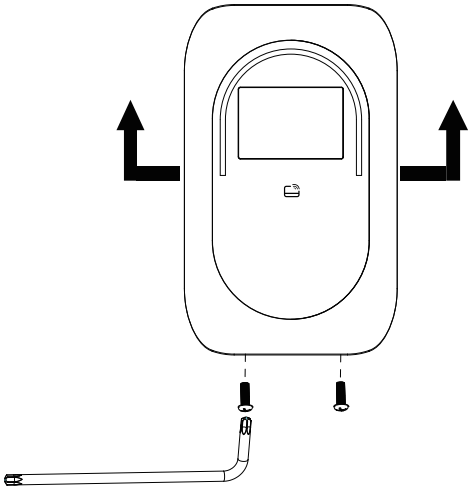

STEP 2

Remove the cover from the charger using the appropriate tools. (such as coin)

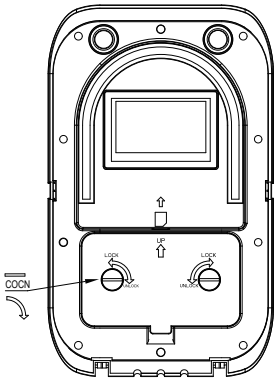

STEP 3

Remove the waterproof plug from the charger cable inlet，Connect and Lock the M32 Conduit Fitting Part1 (❶) and Part2 (❷) (including the washer) to the Inlet as shown below.

Note:

1.You need to bring your own AC input cable.

2.Select the AD34.5 or M32 Conduit Fitting based on the AC input cable type，If you use AD34.5 Conduit Fitting, perform the same steps as above.

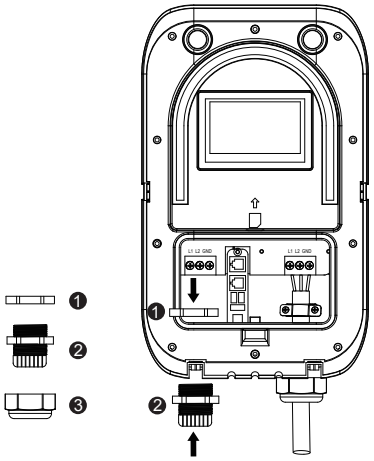

USER MANUAL

STEP 4

Take out the AC input cable and strip the TPU cover by 5.52" (140mm), and then strip individual wires by 0.47" (12mm). use ferrules on stranded wires and press it by wire crimper.

Note: You need to bring your own ferrules.

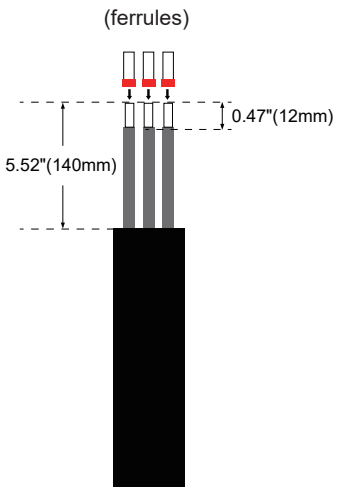

STEP 5

First, pass the AC input cable through the M32 Conduit Fitting Part 3 (❸), then continue through Part 1 and Part 2. Connect the wires (L1, L2, GND) and tighten each connector screw to 2 N.m (17.7 in.lbs).

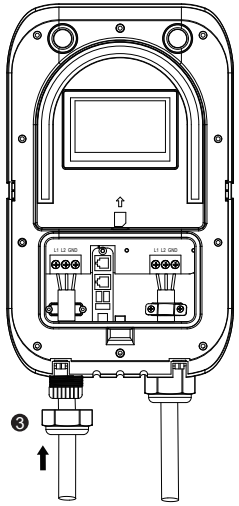

STEP 6

Lock the M32 Conduit Fitting Part 3 (❸),

Press the AC input cable with cable ramp and secure it with two screws (3.5*16).

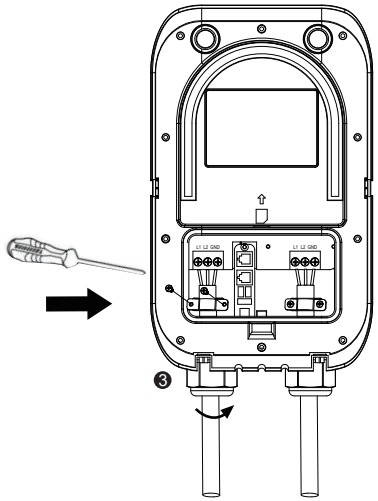

STEP 7

Remove the waterproof plug from the charger cable inlet. Connect and lock the AD21.2 conduit fitting Part1 (❶) and Part2 (❷) to the inlet. Then, insert the Ethernet cable with the RJ45 plug into the bellows, through the AD21.2 conduit fitting, and plug the cable into the RJ45 port (RS232/RS485 operate in the same mode).

Note: You need to bring your own bellows

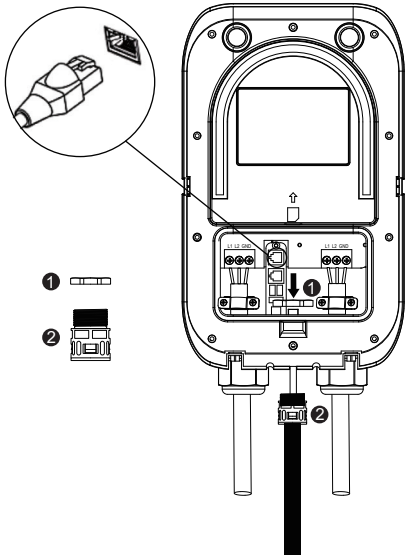

STEP 8

Align the cover with its position on the charging station.Secure the cover in place using the appropriate tools (such as coin).

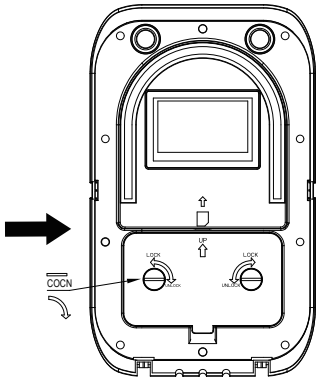

STEP 9

Align the magnetic positions of the cover plate and the middle frame, Fasten both clips and fix the two screws at the bottom.

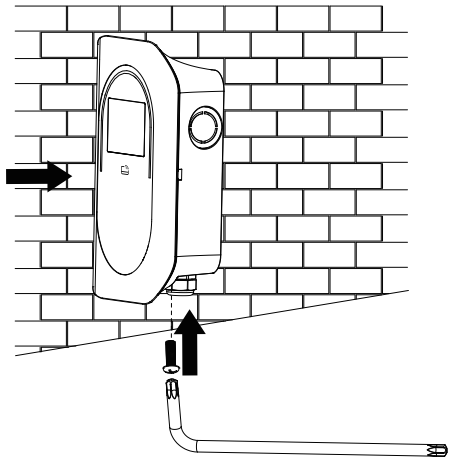

8. Light Codes

8.1 After Start UP

Device Status	Light Codes
Power On	Blue, green and red run clockwise
Standby	Solid Blue
Plug The Charging Connector	Solid Green
Swipe Card	Green Blinking
Charging In Progress	Green Breathing
Finished / Stopped Charging	Solid Green
OTA	Yellow Breathing
Fault	Red

8.2 Error and Warning Messages

No.	Fault Status	Red Light	Remark
1	Emergency Fault	Solid Red	Reset Recover
2	Meter Fault	1 flash followed by 3 sec pause	Auto Recover
3	CP Fault	2 flashes followed by 3 sec pause	Unplug the Connector to Recover
4	UVP	3 flashes followed by 3 sec pause	Auto Recover
5	OVP	4 flashes followed by 3 sec pause	Auto Recover
6	OTP	5 flashes followed by 3 sec pause	Auto Recover
7	OCP	6 flashes followed by 3 sec pause	Unplug the Connector to Recover
8	Ground Fault	7 flashes followed by 3 sec pause	Unplug the Connector to Recover
9	Relay Fault	8 flashes followed by 3 sec pause	Unplug the Connector to Recover
10	RCD Abnormal	9 flashes followed by 3 sec pause	Unplug the Connector to Recover
11	RCD Self-Test Fault	10 flashes followed by 3 sec pause	Reboot to Recover
12	Relay Self-Test Fault	11 flashes followed by 3 sec pause	Reboot to Recover

9. FCC Declaration

This device complies with part 15 of the FCC Rules.

Operation is subject to the following two conditions:

This device may not cause harmful interference, and this device must accept any interference received, including interference that may cause undesired operation.

Caution: Changes or modifications to this unit not expressly approved by the party responsible for compliance could void the user's authority to operate the equipment.

Note: This equipment has been tested and found to comply with the limits for a Class A digital device, pursuant to part 15 of the FCC Rules. These limits are designed to provide reasonable protection against harmful interference when the equipment is operated in a commercial environment. This equipment generates, uses, and can radiate radio frequency energy and, if not installed and used in accordance with the instruction manual, may cause harmful interference to radio communications. Operation of this equipment in a residential area is likely to cause harmful interference in which case the user will be required to correct the interference at his own expense.

WIFI module: Containing FCC ID: XMR2023FCS960K

LTE module: Containing FCC ID: XMR202008EC25AFXD

To satisfy FCC RF exposure requirements, a separation distance of 20cm or more should be maintained between the antenna of this device and persons during device operation. To ensure compliance, operations at closer than this distance is not recommended.

10. Warranty and Maintenance

• The warranty period for this charger is three years.

• During the warranty period for any malfunction under normal use according to the User Manual (to be determined by certified maintenance technicians of sellers), the product shall be repaired free of charge. Except for the following situations, the charger shall be subject to the above warranty terms:

1. The warranty certificate cannot be provided or the contents of the warranty certificate are modified
or inconsistent with the label indication of the repaired product.
2. Those who are unable to provide valid proof of purchase.
3. Those who exceed the manufacturer's specified warranty period.
4. Those who damage the product due to not following the product service instruction for use, maintenance and storage.
5. Damage or malfunction caused by external object entering.
6. Unauthorized repair, disassembly or modification.
7. Damage caused by force majeure (such as lightning, excessive voltage, earthquake, fire, flood, etc.).
8. Malfunction and damage caused by other unavoidable external factors. Malfunction and damage caused by improper use of equipment, such as water or other solutions entering into the equipment.
9. Malfunction and damage caused by the grid power supply and voltage which is not specified for use with the charger equipment.

The above guarantees shall be made solely, and no other express or implied warranties shall be made (including the implied warranties of merchant ability, particular and applicable reasonableness and adaptability, etc.) whether in the contract, civil negligence, or other aspects, the Company shall not be responsible for any special, incidental or consequential damages.