Annex acc. to FCC Title 47 CFR Part 15.258
relating to
Hammer-IMS nv
TOKYO

Annex no. 11
Photos of the antenna requirements /Periodic Operation Characteristics/ Transmission Times

Title 47 - Telecommunication
Part 15 - Radio Frequency Devices
Subpart C – Intentional Radiators
Measurement Procedure:
ANSI C63.4-2014
ANSI C63.10-2013

ilac-MRA DAkkS Deutsche Akkreditierungsstelle D-PL-12053-01-03

TÜV NORD Hochfrequenztechnik GmbH & Co. KG Tel.: +49 221 8888950
LESKANPARK, Building 10, Waltherstr. 49-51, 51069 Cologne, Germany hf@tuev-nord.de

Version	Applied changes	Date of release
00	Initial release	2024-04-15
01	FCC Grantee Code Updated	2024-06-27

Silicon Radar GmbH
Im Technologiepark 1
15236 Frankfurt (Oder)
Germany

tel: +49 335 / 228 80 30
fax: +49 335 / 557 10 50
info@siliconradar.com
www.siliconradar.com

Collimator Lens

Collimator Lens for *SiRad*® Evaluation Kits – Accessory for Radar Evaluation Boards

Data Sheet

Status:	Date:	Author:	Filename:	
Release	19-May-2021	Silicon Radar GmbH	20210519_DataSheet_Collimator_Lens_v1.1	
Version:	Product number:	Package:	Marking:	Page:
1.1	RadarLens 01.1			1 of 6

Version Control

Version	Changed section	Description of change	Reason for change
0.1	(all)	Generation of document	
0.2	(all)	Specification data revised	Routinely revision
0.3	(all)	Specification data revised	Routinely revision
0.4	(all)	Information on Radiation Characteristics revised, modified according to currently valid template.	Update and review of controlled document style
1.0		Finalization Release 1.0	
1.1	(all)	Adaptation of Product Codes	Introduction of EvalKit Easy r4

Table of Contents

1 Features 4
2 Description 4
3 Radiation Characteristics 5
4 Mechanical Characteristics 5

1 Features

- Optional accessory for evaluation kits *SiRad Easy® r4, SiRad Easy®* and *SiRad Simple®*
- Focuses beam of radar front end
- Suitable for all radar frequencies between 20 and 325 GHz
- Optimized for TRX_120_001
- Increases range of radar front end
- Can be installed quickly and easily
- Reduces divergence of microwaves
- Made of HDPE plastic
- Made in Germany

2 Description

As shown in Figure 1, Silicon Radars evaluation kits can optionally be equipped with a collimator lens.

Figure 1 Evaluation kit *SiRad Easy®* with assembled lens

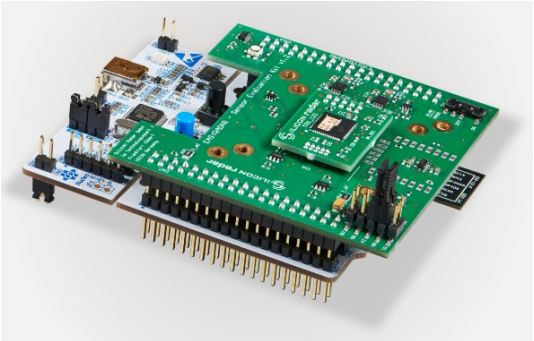

Figure 2 Evaluation kit *SiRad Easy®* without lens

The maximum range – e.g. of the 122 GHz front end TRX_120_001 – is approximately 40 meters with an opening angle of around ± 30 degrees (-6 dB) for strong targets like a building or car. The opening angle of the radar lobe can be reduced with the collecting lens enclosed. The focusing effect depends on the distance between radar front end and lens. With this lens mounted on spacers with a length of 15 mm as collimator, the opening angle decreases to around ± 4 degrees and the range can be significantly increased (depending on target situation).

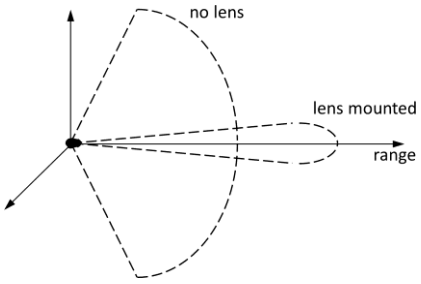

Figure 3 Schematic comparison of range with and without the collimator lens

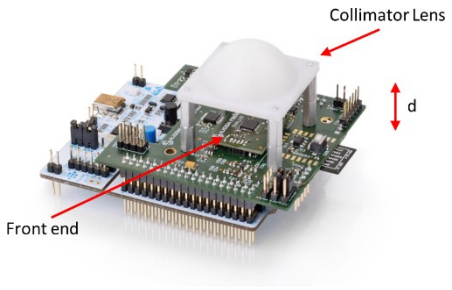

Figure 4 Evaluation kit with assembled collimator lens

Figure 3 shows the radiation directivity without and with collimator lens mounted. The collimator lens should be mounted at a distance of about 10 to 15 mm from the radar front end's surface as depicted in Figure 4. For this purpose, 10-mm spacers are provided with the collimator lens.

3 Radiation Characteristics

The radiation characteristics of the evaluation kits *SiRad Easy*® r4 and *SiRad Easy*® with the collimator lens is shown as blue curve in Figure 5. Here the lens has a suspension height of 10 mm resulting in an opening angle of about 20 degrees. For comparison, the measured radiation pattern without lens is depicted as red curve for different angles in the E and H plane, measured in both evaluation board orientations of 0° and 90°.

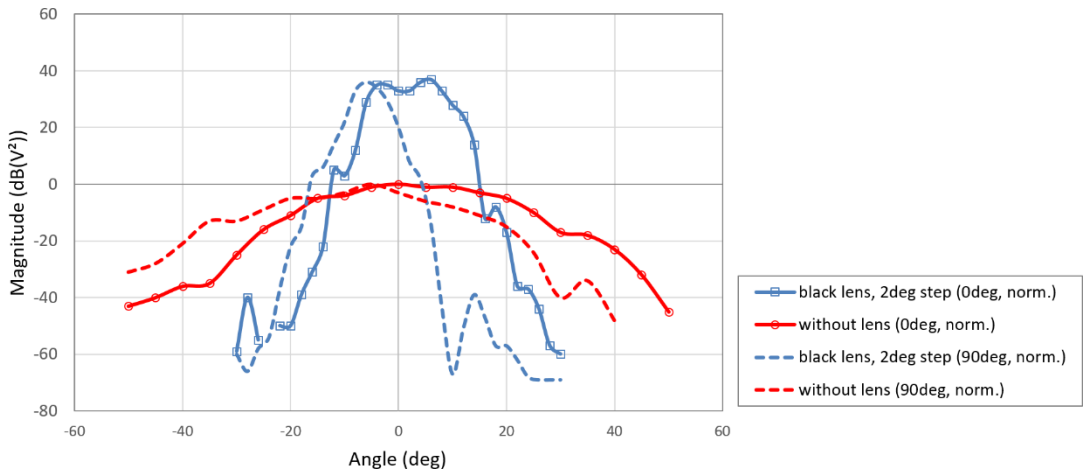

Figure 5 Measured radiation pattern for the radar system with assembled collimator lens with a lens suspension using 10-mm spacers and Silicon Radar's radar front end TRX_120_001 (evaluation board orientation to 0 and 90 degree, detector distance 90 cm). Antenna pattern measured with passive reflector.

4 Mechanical Characteristics

Mechanical dimensions of the plastic lens as shown in Figure 6:

Lens size:	36 mm × 36 mm	Size tolerance:	± 1 mm
Thickness, base plate:	3.5 mm	Thickness, overall:	15.7 mm
Hole distance:	31 mm × 31 mm	Hole diameter:	2.2 mm

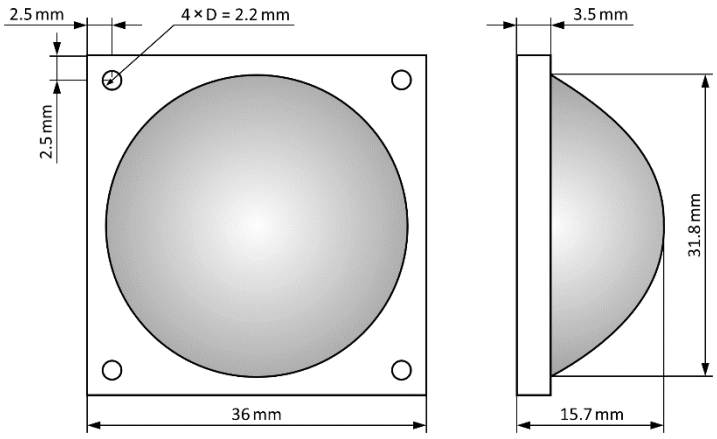

Figure 6 Top view (left) and side view (right) of the collimation lens

Disclaimer

Silicon Radar GmbH 2020. The information contained herein is subject to change at any time without notice.
Silicon Radar GmbH assumes no responsibility or liability for any loss, damage or defect of a product which is caused in whole or in part by

(i) use of any circuitry other than circuitry embodied in a Silicon Radar GmbH product,
(ii) misuse or abuse including static discharge, neglect, or accident,
(iii) unauthorized modifications or repairs which have been soldered or altered during assembly and are not capable of being tested by Silicon Radar GmbH under its normal test conditions, or
(iv) improper installation, storage, handling, warehousing, or transportation, or
(v) being subjected to unusual physical, thermal, or electrical stress.

Disclaimer: Silicon Radar GmbH makes no warranty of any kind, express or implied, with regard to this material, and specifically disclaims any and all express or implied warranties, either in fact or by operation of law, statutory or otherwise, including the implied warranties of merchantability and fitness for use or a particular purpose, and any implied warranty arising from course of dealing or usage of trade, as well as any common-law duties relating to accuracy or lack of negligence, with respect to this material, any Silicon Radar product and any product documentation. Products sold by Silicon Radar are not suitable or intended to be used in life support applications or components, to operate nuclear facilities, or in other mission critical applications where human life may be involved or at stake. All sales are made conditioned upon compliance with the critical uses policy set forth below.

CRITICAL USE EXCLUSION POLICY: BUYER AGREES NOT TO USE SILICON RADAR GMBH'S PRODUCTS FOR ANY APPLICATIONS OR IN ANY COMPONENTS USED IN LIFE SUPPORT DEVICES OR TO OPERATE NUCLEAR FACILITIES OR FOR USE IN OTHER MISSION-CRITICAL APPLICATIONS OR COMPONENTS WHERE HUMAN LIFE OR PROPERTY MAY BE AT STAKE.

Silicon Radar GmbH owns all rights, titles and interests to the intellectual property related to Silicon Radar GmbH's products, including any software, firmware, copyright, patent, or trademark. The sale of Silicon Radar GmbH’s products does not convey or imply any license under patent or other rights. Silicon Radar GmbH retains the copyright and trademark rights in all documents, catalogs and plans supplied pursuant to or ancillary to the sale of products or services by Silicon Radar GmbH. Unless otherwise agreed to in writing by Silicon Radar GmbH, any reproduction, modification, translation, compilation, or representation of this material shall be strictly prohibited.