Smart Security Panel Kit

User Manual

CONTENT

I. General Description....1

1.1 Product Example....1

1.2 Home Installation Diagram....2

II. Set up the Security Devices....3

2.1 Security Panel....3

2.2 Entry Sensor....6

2.3 Motion Sensor....8

2.4 Controller....9

2.5 Multifunction Button---Doorbell/SOS Button....10

III. Learn to Use the Security Panel....11

3.1 Main Interface....11

3.2 Menu introduction....12

IV. Troubleshooting and Maintenance....14

V. Hazardous Substance Declaration....15

VI. Warranty Rules....15

VII. FCC declares....16

I. General Description

1.1 Product Example

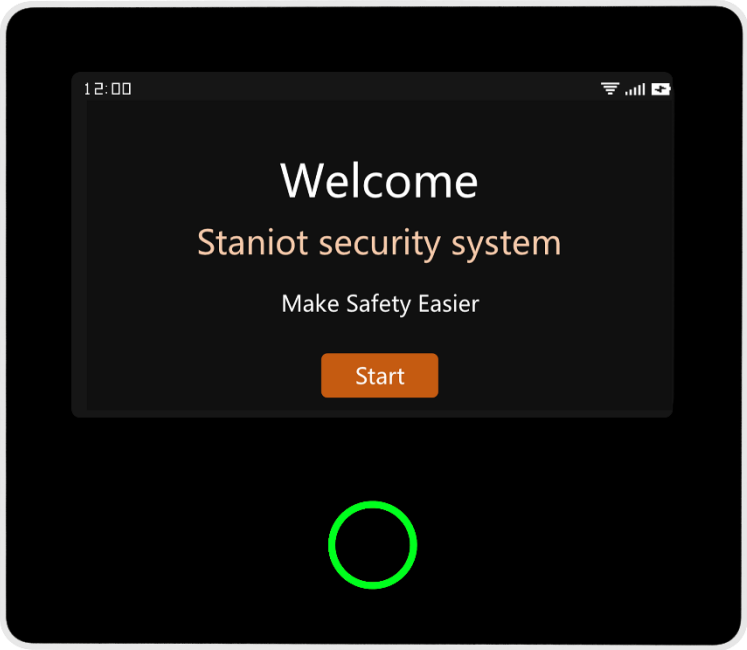

Security Panel

The central hub of the security system. Using 4.3-inch IPS capacitive touch screen, built-in high-performance low-power intelligent microprocessor. With a variety of installation methods: wall-mounted, desktop placement. Added built-in siren, up to 110dB. It connects all of your accessories to the APP, so you can stay in control of your home from anywhere.

Accessories list: (Subject to actual packaging)

Entry Sensor

Send the alarm signal to the panel when the door or window are opened, it is recommended to install at important entrances.

Motion Sensor

Send the alarm signal to the panel when the movement is detected.

Controller

After pairing with the security panel, quickly "Away", "Home", and "Disarm" the security system, and trigger the emergency alarm.

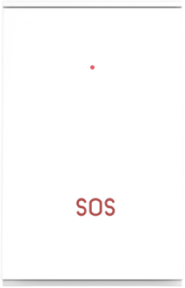

Multifunction Button

Doorbell button or SOS button

1.2 Home Installation Diagram

II. Set up the Security Devices

2.1 Security Panel

Installation Diagram

(1) Wall Mount

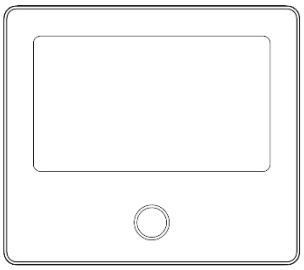

Security Panel×1

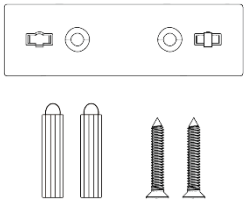

Wall Hanging Plate×1

Screws×2

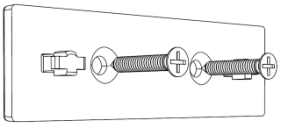

1. Install the hanging plate on the wall with screws.

Note: The screws must be all nailed to the wall, and the hanging board must be parallel.

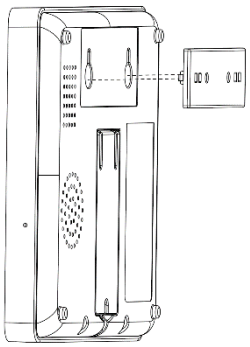

2. Align the hole on the back of the panel with the hanging plate and install it.

Note: For concealed wire installation, please remove the bracket and cable clip.

(2) Placed on the Desktop

Comes with a Stand on the Back

It can be directly placed on the desktop, free from the installation of holes on the wall, and can be placed anywhere in the home.

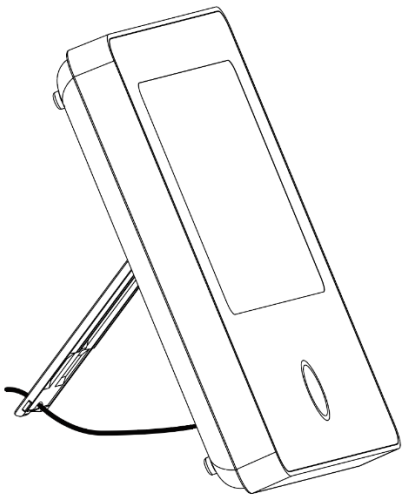

Note:

1) Installed in the center of the home to facilitate signal reception and transmission.

2) Avoid installing all devices on metal surfaces, as well as on load-bearing walls.

Appearance Design

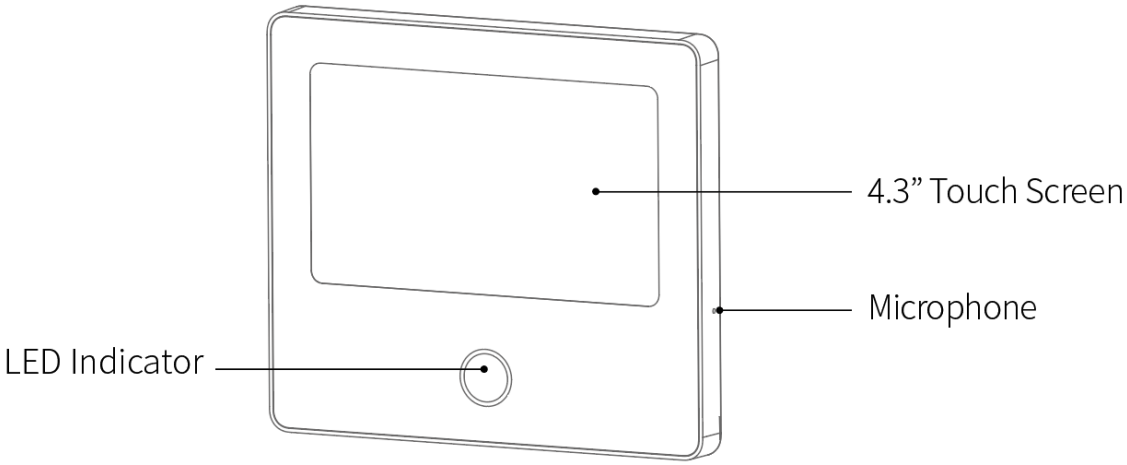

Front View

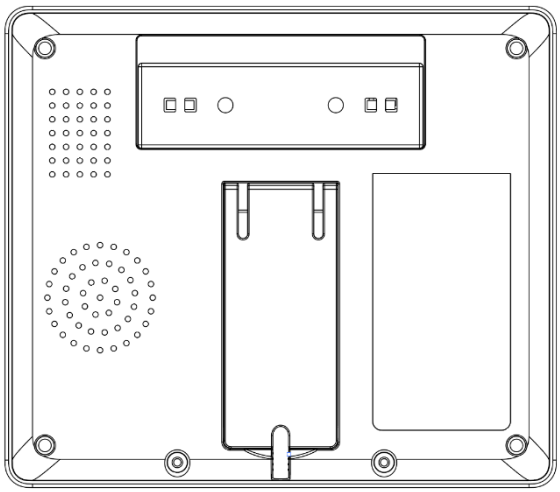

Rear Main View

Indicator:

Color	Panel status
Red	Alarming
Yellow	Armed
Green	Disarmed

Flashing	Panel status
Yellow/Green	Delay Arming
Red/Green	Delay Alarming

Alarm Modes

A. Security Panel Alarm Modes

a. **Away:** The security panel is in a monitoring state, when the accessories are triggered, the security panel will alarm.

b. **Home:** When the user is at home, in this mode, some areas can be monitored and alarms.

c. **Disarm:** The security panel cancels the monitoring state, and only the SOS button or the accessories set to "Always" mode can trigger the alarm.

B. Accessories Modes:

a. **Away/Home:** When the security panel is in the "Away" or "Home" state, the panel will alarm after the sensor is triggered. It is recommended that the outdoor sensor can be set to this mode.

b. **Away:** When the security panel is in the "Away" state, the panel will alarm after the sensor is triggered. It is recommended that the outdoor detector can be set to this mode.

c. **Always:** Regardless of the state of the security panel, any time the sensor is triggered, the panel will alarm. It is recommended to set this mode for gas leaks or smoke detectors, etc.

d. **Disabled:** The security panel will not respond to the alarm request of the sensor set in this mode.

Note:
You can choose which sensors are armed in Home and Away mode, or both, or always active.
For example, if you want to avoid triggering the alarm when you are at home, you can set the specific sensor in Away mode. Then when you set the panel in “Home” state, the alarm will not be triggered, only in “Away” state, the alarm will be triggered.

2.2 Entry Sensor

Configure

On the Security Panel:

A. Go to Menu---Accessories---Enter User Code (Default: 1234).

B. Press Sensor---"+" ----Entry, then set the Mode, Delay, and Advanced settings.

C. Press "+ Pair", then trigger the Entry sensor (Just separate the two parts).

D. Paired successfully, rename the sensors on the APP.

Installation

The entry sensor should be installed on the door or window (see image).

A. First, wipe the area on the door or window clean and apply double-sided tape to the bottom.

B. The door sensor transmitter (large) and the door sensor magnet (small) should be installed separately. The triangle marks on the transmitter and the magnet should be facing each other, and the distance between the two is less than 0.6".

C. When the door or window is opened after installation, the indicator light will be on for 2 seconds to indicate that the installation is complete.

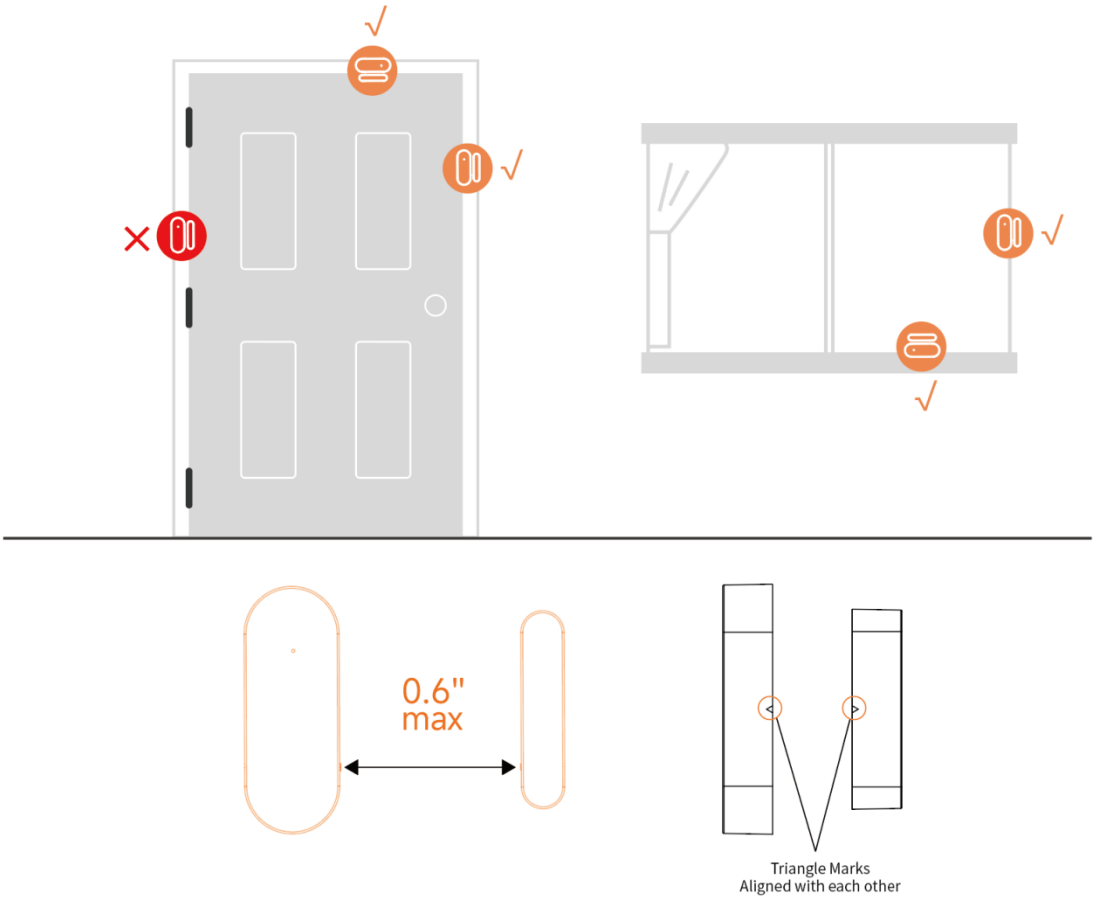

Battery Replacement

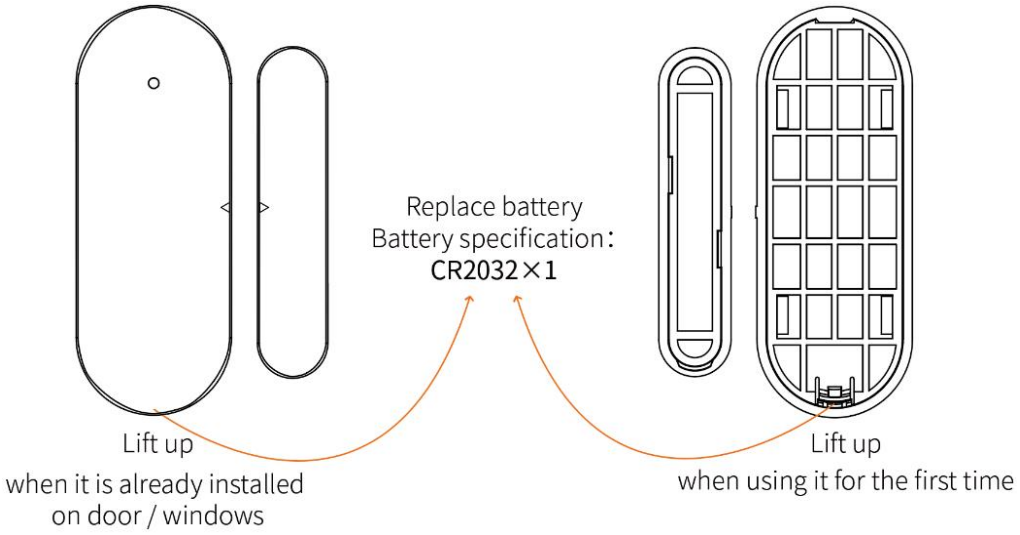

Door Sensor A

Battery specification: CR2032×1

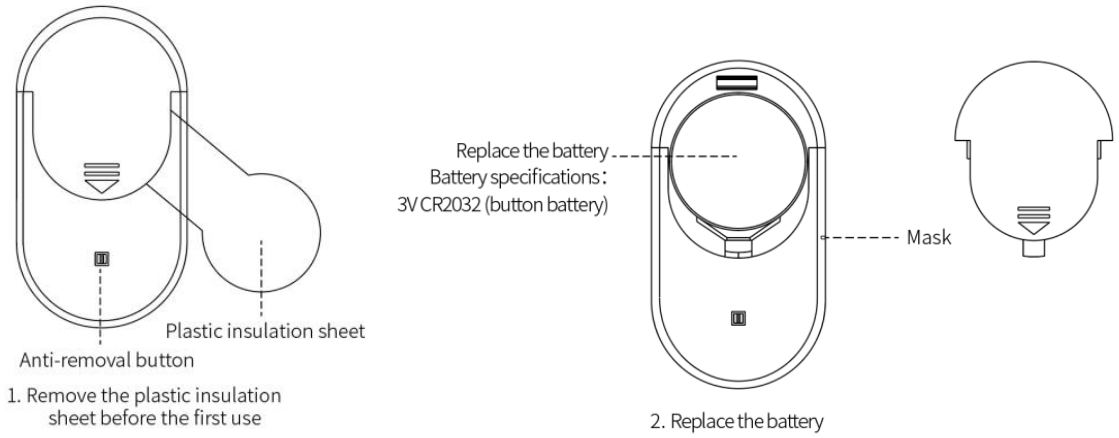

Door Sensor B

Battery specification: CR2032×1

2.3 Motion Sensor

Configure

On the Security Panel:

A. Go to Menu---Accessories---Enter User Code (Default: 1234).

B. Press Sensor---"+" ----Motion, then set the Mode, Delay, and Advanced settings.

C. Press "+ Pair", then trigger the Motion sensor (Just wave your hands until the light is on).

D. Paired successfully, rename the sensors on the APP.

Installation

A. The recommended installation height is 79"-87" (2.0~2.2m) above the ground.

B. Install it in a corner or on a flat wall, with no obstacles or blind spots.

C. It should not be directly facing the cold and hot vents or cold and hot sources.

D. To avoid false alarms, make sure your pets can't get close to it.

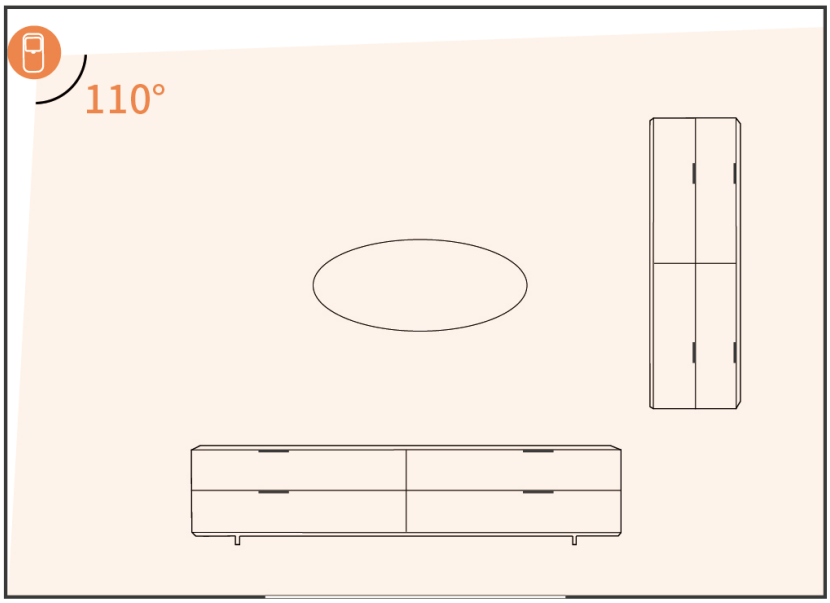

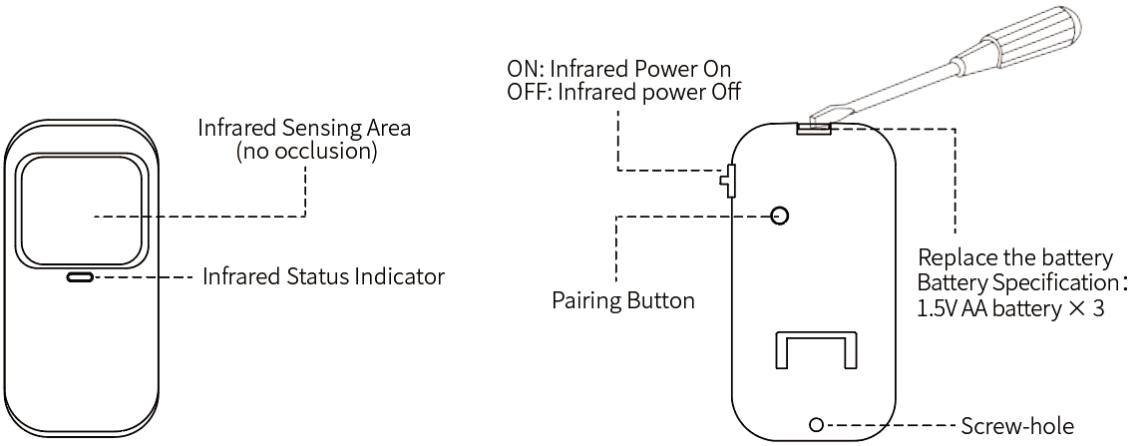

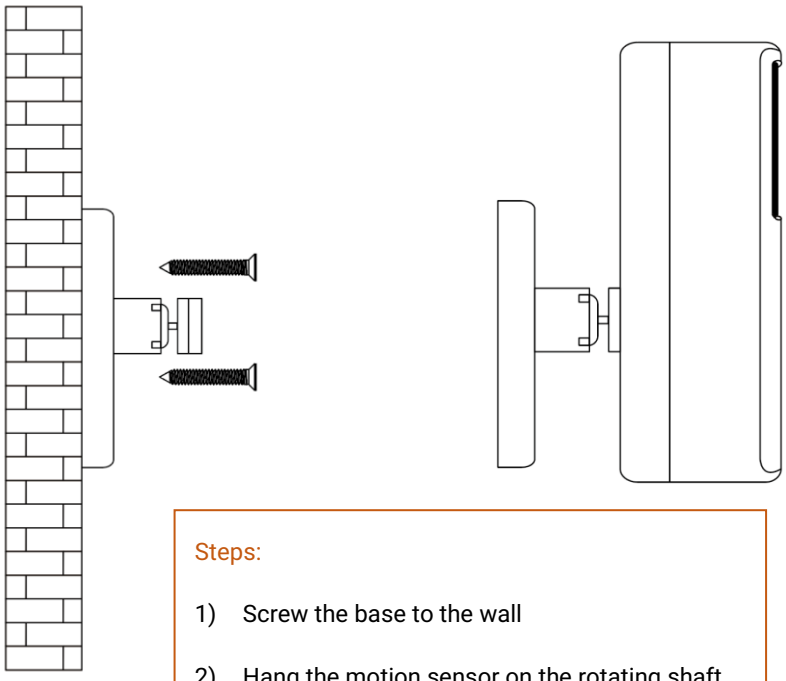

Steps:

1) Screw the base to the wall

2) Hang the motion sensor on the rotating shaft

2.4 Controller

Configure

On the Security Panel:

A. Go to Menu---Accessories---Enter User Code (Default: 1234).

B. Press Controller

C. Press " + ", then trigger the controller (Press any key).

D. Paired successfully, rename the controller on the APP.

Appearance Introduction

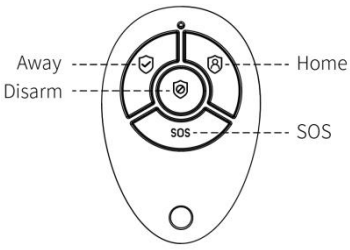

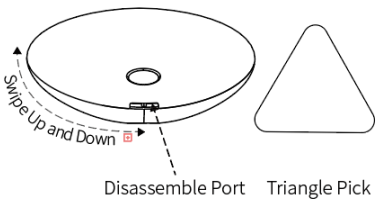

1. The user can use "Triangular Pick" to slide up and down along the side gaps at the disassembly opening repeatedly, and then break it apart.

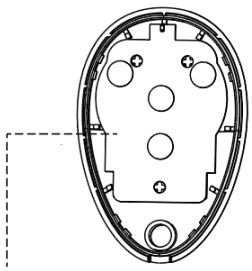

2. The battery is behind the PCB.

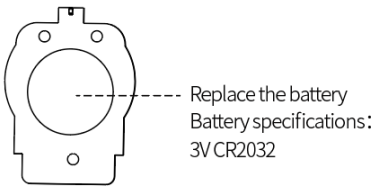

3. The user can re-install the remote control shell to use it when the user has completed the battery replacement.

2.5 Multifunction Button---Doorbell/SOS Button

Configure----Doorbell Button

On the Security Panel:

A. Go to Menu---Accessories---Enter User Code (Default: 1234).

B. Press Doorbell.

C. Press "+", then press the doorbell button.

D. Paired successfully, rename the sensors on the APP.

Configure----SOS Button

On the Security Panel:

A. Go to Menu---Accessories---Enter User Code (Default: 1234).

B. Press Sensor---"+" ----Urgent, then set the Advanced setting.

C. Press "+ Pair", then trigger the SOS button.

D. Paired successfully, rename the SOS button on the APP.

Install/Replace Battery

a. Open the cover:

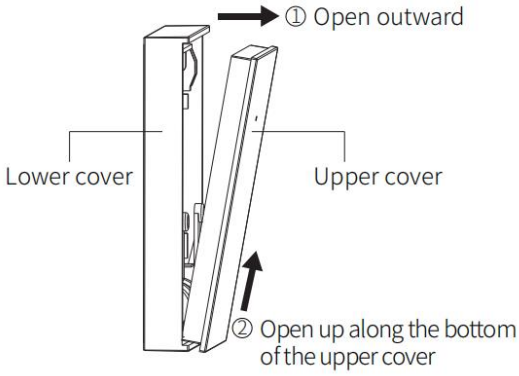

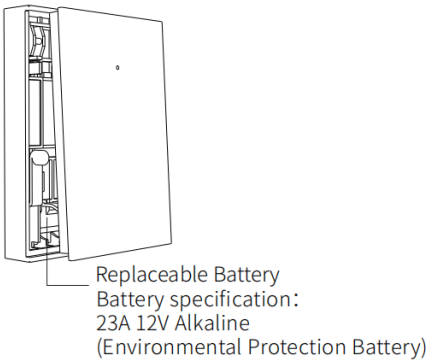

b. Close the cover:

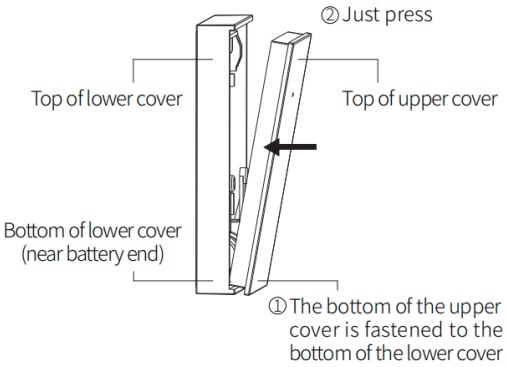

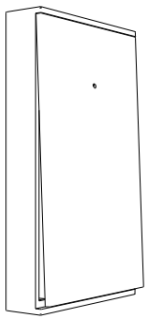

III. Learn to Use the Security Panel

3.1 Main Interface

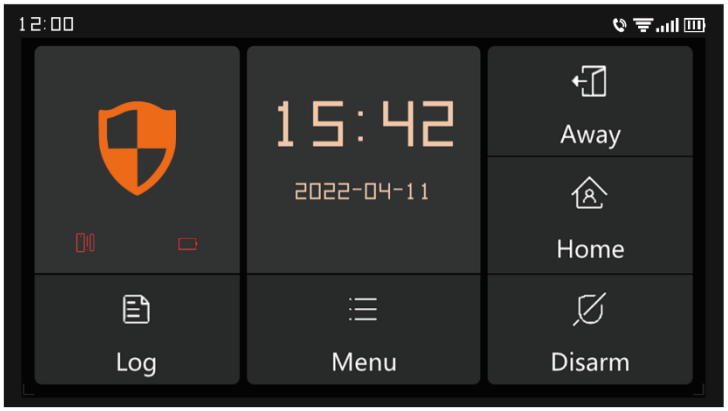

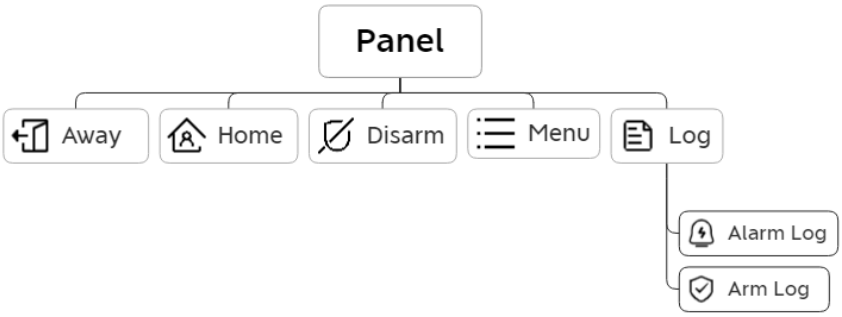

4.1.1 System Status

Icon					
Status	The system is in alarm state	System is armed	System is disarmed	Accessories low battery	Door/Window opened

4.1.2 Log

Alarm Log: View all alarm records, including Cause, Source, and Time.

Arm Log: View all arm/disarm records, including Action, Source Device, and Time.

Note: Support up to 160 Alarm records, and 80 Arm and disarm records.

3.2 Menu introduction

Accessory

A. Frame Diagram

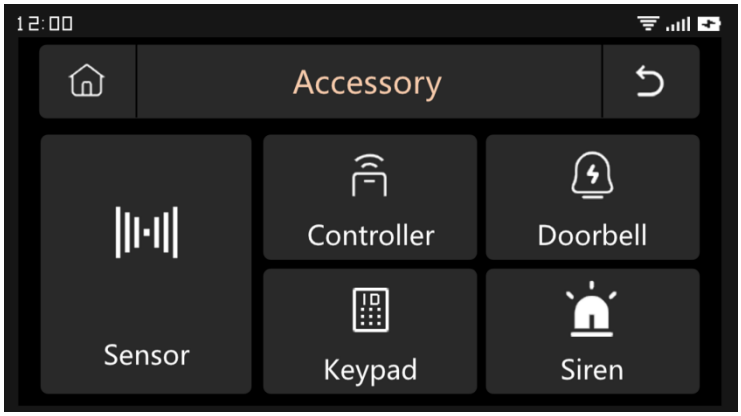

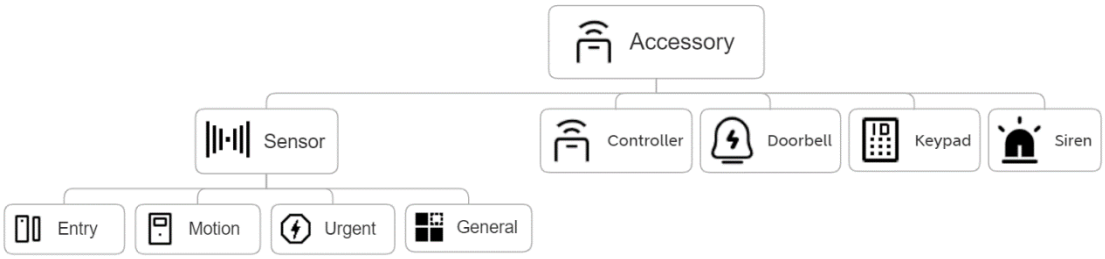

B. Sensor

Entry: Manage all the Entry sensors.

Motion: Manage all the Motion sensors.

Urgent: Emergency detectors such as SOS buttons, gas detectors, and smoke detectors, please add them here.

General: Other sensors or detectors, please add them here.

Note:

1) The security system supports the accessories with 433MHz, ev1527.

2) For the Entry sensors from another brand, please add it to “General”

3) Support up to 160 Sensors, 6 Controllers, 6 Doorbells, 6 Keypads.

Security

(1) Frame Diagram

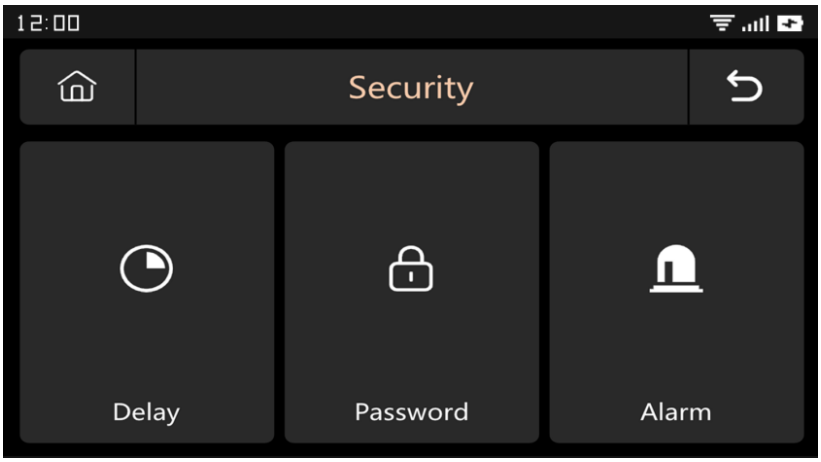

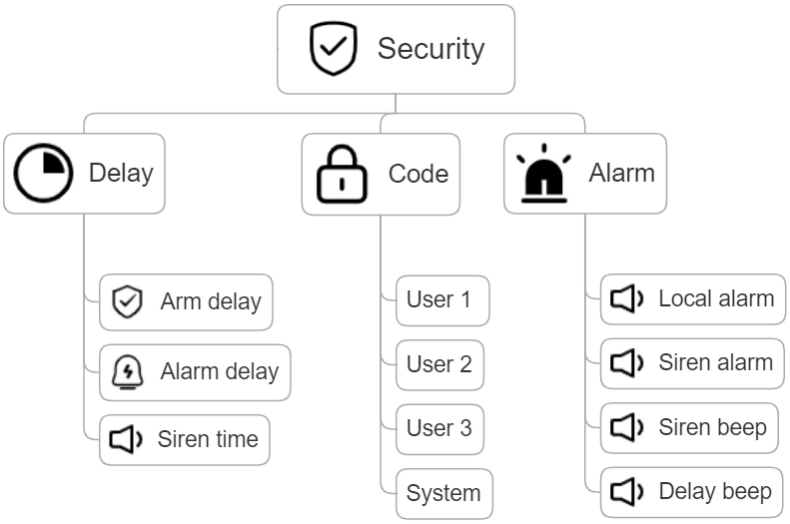

(2) Delay: Customize the countdown time when Alarm or Arm.

(3) Code:

1) User Code: Default user code is **1234.**

2) System Code: Default system code is **9876.**

3) Obfuscated Code: When entering the code, you can enter 5 to 8 digits of the obfuscated code, as long as it contains the correct 4 digits in succession, it can be recognized as the correct code.

4) Password Validity Period: After selecting, you do not need to enter the password again within 2 minutes when the screen is on.

(4) Alarm:

Local Alarm: Select whether the panel emits an alarm sound.

Siren Alarm: Select whether the external signal emits an alarm sound

Siren Beep: Select whether the siren will beep when Arm/Disarm the panel.

Delay Beep: Choose whether to sound a beep when Arm or Alarm countdown.

IV. Troubleshooting and Maintenance

Failure	The Reason	The Solution
Remote control malfunction	1. Low battery 2. The metal sheet of the battery compartment is in poor contact or is corroded 3. The code is not paired with the panel 4. Does not match the wireless parameters of the panel	1. Replace the battery of the same model 2. Remove rust and dirt from metal sheets 3. Re-pair with the panel 4. Purchase accessories of the same type with technical parameters
Door sensor failure	1. Low battery 2. The metal sheet of the battery compartment is in poor contact or is corroded 3. The code is not paired with the panel 4. Does not match the wireless parameters of the panel 5. The door sensor transmitter and the magnet are installed too far	1. Replace the battery of the same model 2. Remove rust and dirt from metal sheets 3. Re-pair with the panel 4. Purchase accessories of the same type with technical parameters 5. Install the door sensor transmitter and the magnet close to each other
Motion Detector failure	1. Low battery 2. The metal sheet of the battery compartment is in poor contact or is corroded 3. The code is not paired with the panel 4. Does not match the wireless parameters of the panel 5. Incorrect angle	1. Replace the battery of the same model 2. Remove rust and dirt from metal sheets 3. Re-pair with the panel 4. Purchase accessories of the same type with technical parameters 5. Adjust the installation angle
Security panel does not alarm	1. The security panel is not armed 2. Improper installation of accessories, too far away from the panel 3. The accessory code does not match the panel	1. Arming the panel 2. Adjust the position of accessories 3. Re-pair with the panel
The signal distance of the panel receiving accessories becomes shorter	1. The main power is disconnected, and the backup power is insufficient 2. There is interference from similar products nearby 3. The panel receiving module is faulty	1. Check the power supply and restore the power supply 2. Check the source of interference and remove it 3. Contact customer service for repair

No emergency call was made when the alarm was triggered	1. The panel is not armed 2. No emergency phone number is set 3. Improper installation of accessories, too far away from the panel 4. Encoding does not match	1. Arming the panel 2. Re-set according to the instructions 3. Adjust the position of accessories 4. Re-pair with the panel
Entry opened warning is invalid	1. Door sensor pairing error 2. The door sensor switch code does not match the panel 3. Wrong alarm type is set	1. The door opening code needs to be paired correctly 2. The accessories are non-certified devices 3. Set the alarm type as main door alarm and window alarm

V. Hazardous Substance Declaration

Component Name	Harmful substance					
	Lead (Pb)	Mercury (Hg)	Cadmium (Cd)	Hexavalent chromium (Cr(VI))	Polybrominated biphenyls (PBB)	Polybrominated diphenyl ethers (PBDE)
Metal parts	O	O	O	O	O	O
Plastic parts	O	O	O	O	O	O

VI. Warranty Rules

(1) Please contact our after-sales service for any failure caused by the product itself during the warranty period.

(2) The goods are guaranteed for one year from the date of sale, and the warranty service is only valid under normal use.

(3) Damage caused by the use environment not meeting the requirements of this product is not covered by the warranty.

(4) Product damage caused by man-made and force majeure is not covered by the warranty.

VII. FCC declares

This device complies with Part 15 of the FCC Rules. Operation is subject to the following two conditions: (1) this device may not cause harmful interference, and (2) this device must accept any interference received, including interference that may cause undesired operation

NOTE: This equipment has been tested and found to comply with the limits for a Class B digital device, pursuant to Part 15 of the FCC Rules. These limits are designed to provide reasonable protection against harmful interference in a residential installation. This equipment generates, uses and can radiate radio frequency energy and, if not installed and used in accordance with the instructions, may cause harmful interference to radio communications. However, there is no guarantee that interference will not occur in a particular installation. If this equipment does cause harmful interference to radio or television reception, which can be determined by turning the equipment off and on, the user is encouraged to try to correct the interference by one or more of the following measures:

-- Reorient or relocate the receiving antenna.

-- Increase the separation between the equipment and receiver.

-- Connect the equipment into an outlet on a circuit different from that to which the receiver is connected.

-- Consult the dealer or an experienced radio/TV technician for help.

Warning: Changes or modifications not expressly approved by the party responsible for compliance could void the user’s authority to operate the equipment.