Quick Start Guide
快速操作指南

FS-G11P

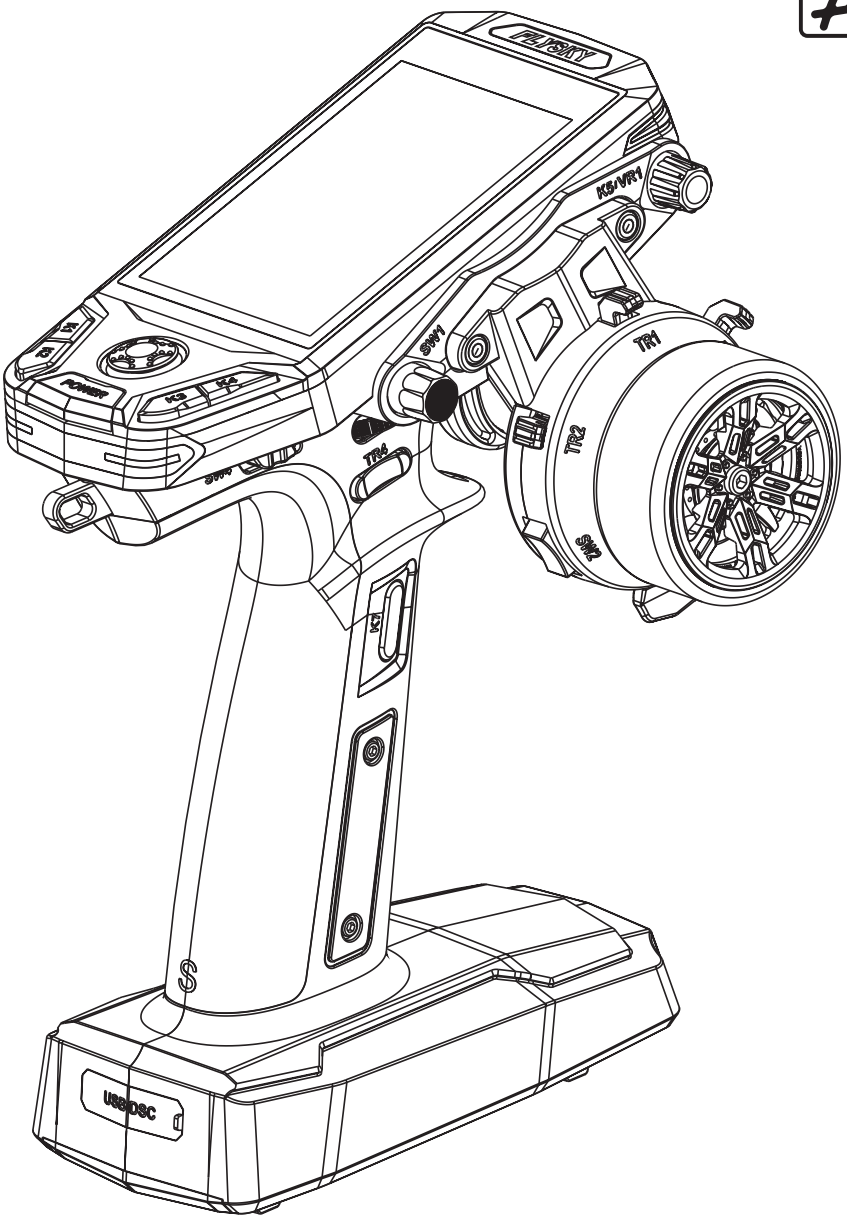

Http://www.flysky-cn.com

Copyright © 2024 Flysky Technology Co., Ltd.

Thank you for purchasing the products of Flysky! To find out more about our products, visit our website at www.flysky-cn.com. If you encounter any problems during using, please refer to the manual first. If the problem is still not resolved, contact your local dealer directly or contact the customer service staff via Flysky official website.

Precautions

Read the safety messages listed below before operation!

- Do not use the product at night or during bad weather conditions, like rain or thunderstorms. It can cause erratic operation or loss of control.
- Do not use the product when visibility is limited.
- Do not expose the product to rain or snow. Any exposure to moisture (water or snow) may cause erratic operation or loss of control.
- Interference may cause loss of control. To ensure the safety of you and others, do not operate in the following places:

Near any sites where other radio control activity may occur

Near people or roads

On any pond/ lake when passenger boats are present

Near power lines or communication broadcasting antennas

- Do not use this product when you are tired, uncomfortable, or under the influence of alcohol or drugs. Doing so may cause serious injury to yourself or others.
- The 2.4GHz radio band is limited to line of sight. Always keep your model in sight as a large can block the RF signal and lead to loss of control.
- Never grip the transmitter antenna during operation. It significantly degrades signal quality and strength and may cause loss of control.
- Do not touch any part of the model that may generate heat during operation, or immediately after use. The engine or motor, may be very hot and can cause serious burns.

- Misuse of this product may lead to serious injury or death. To ensure the safety of you and your equipment, read this manual and follow the instructions carefully.
- Make sure the product is properly installed in your model. Failure to do so may result in serious injury.
- Make sure that the receiver's battery is disconnected before turning off the transmitter. Failure to do so may lead to unintended operation and cause an accident.
- Ensure that all servos operate in the correct direction. If not, adjust the direction first.
- Make sure that the model stays within range in order to prevent loss of control.

CAUTION!

- RISK OF EXPLOSION IF BATTERY IS REPLACED BY AN INCORRECT TYPE. DISPOSE OF USED BATTERIES ACCORDING TO THE INSTRUCTIONS.

Transmitter Overview

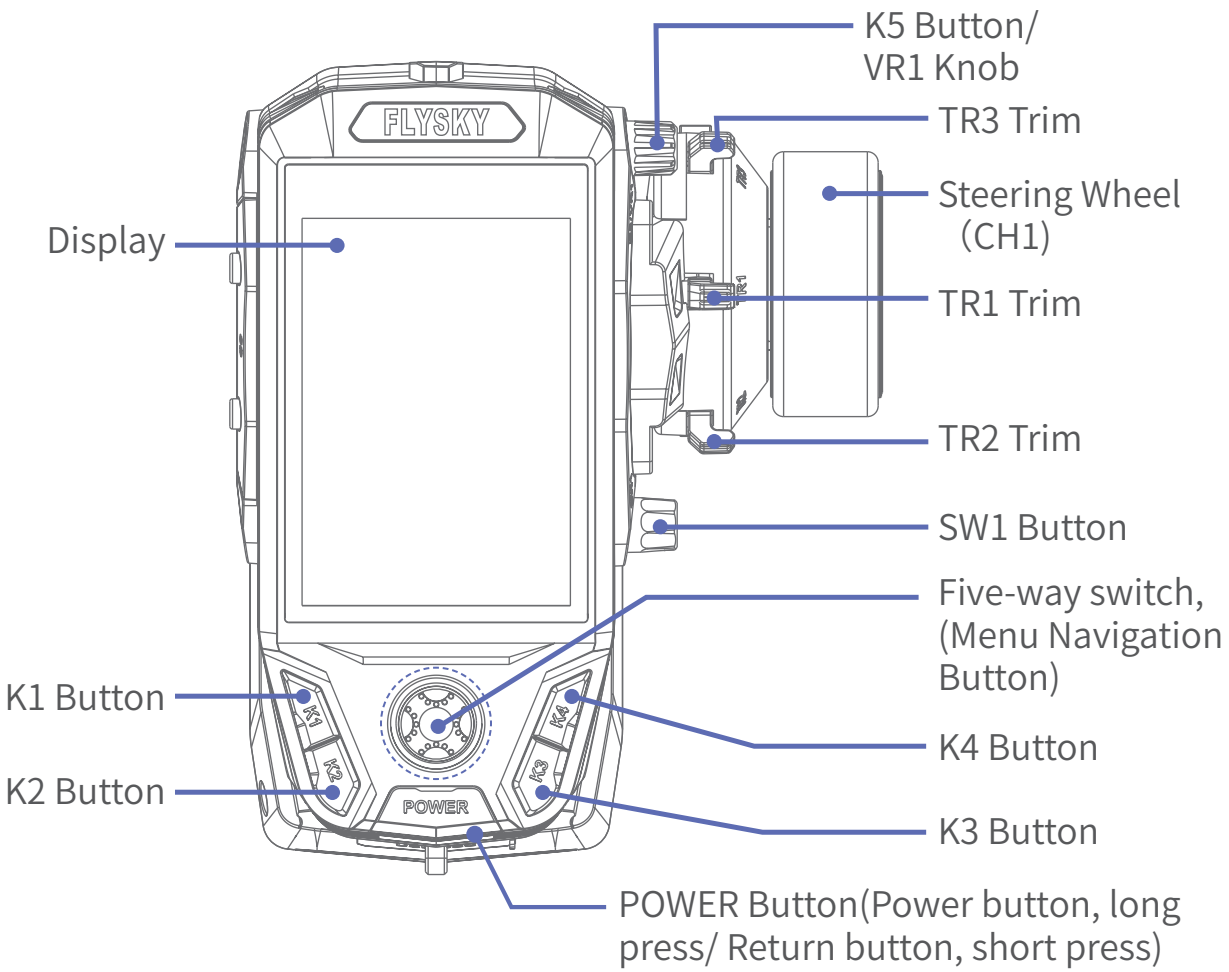

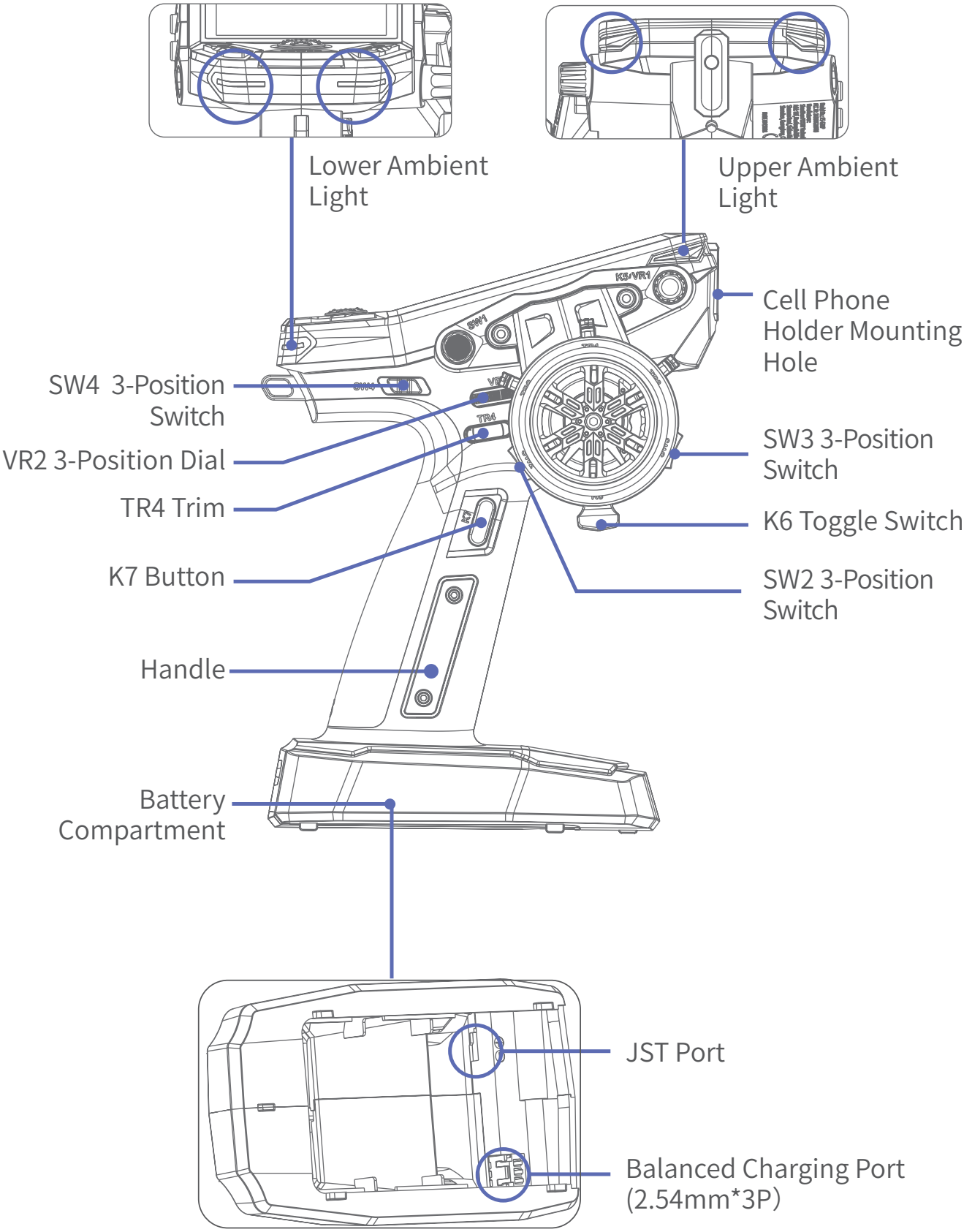
Lower Ambient Light
Upper Ambient Light
Cell Phone Holder Mounting Hole
SW4 3-Position Switch
VR2 3-Position Dial
TR4 Trim
K7 Button
Handle
Battery Compartment
SW3 3-Position Switch
K6 Toggle Switch
SW2 3-Position Switch
JST Port
Balanced Charging Port (2.54mm*3P)

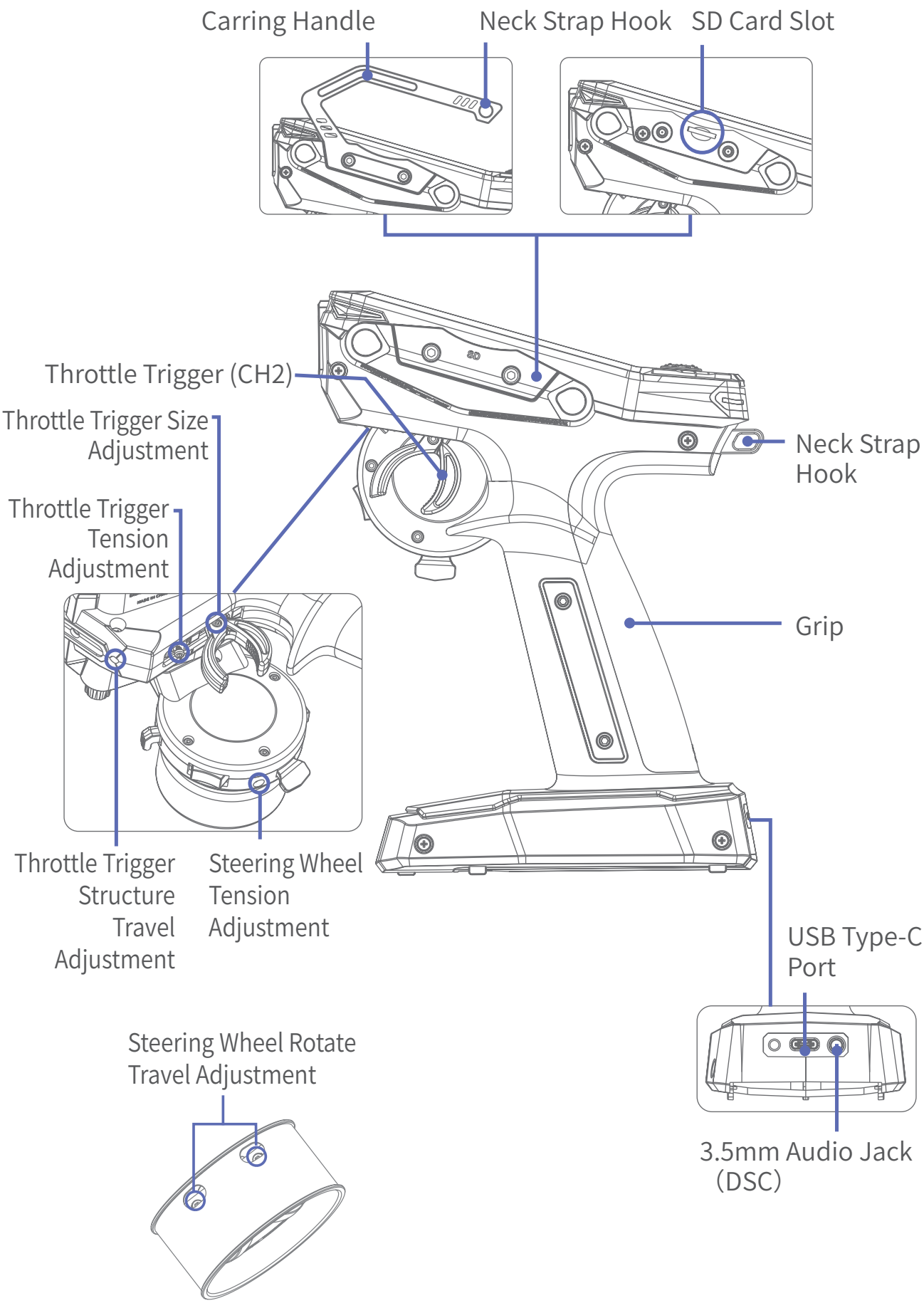
Carring Handle
Neck Strap Hook
SD Card Slot
Throttle Trigger (CH2)
Throttle Trigger Size Adjustment
Throttle Trigger Tension Adjustment
Neck Strap Hook
Grip
Throttle Trigger Structure Travel Adjustment
Steering Wheel Tension Adjustment
USB Type-C Port
Steering Wheel Rotate Travel Adjustment
3.5mm Audio Jack (DSC)

Basic Operations

Installing the 18650 Battery

Follow the steps below to install the 18650 battery:

1. Open the battery compartment cover as shown.
2. Insert 2 batteries into the compartment. Make sure that the batteries are well set according to the polarities marked on the battery compartment.
3. Close the battery compartment cover.

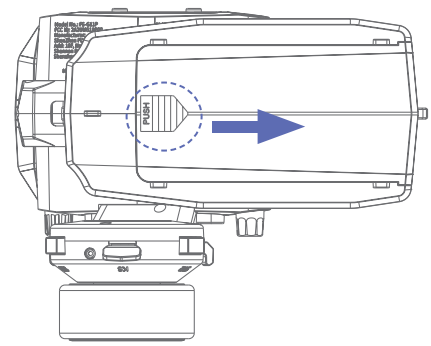

Press and slide forward to remove the battery compartment cover.

Installing the LiPo Battery

The transmitter supports LiPo batteries which are equipped one JST connector or one balanced charging connector of the battery wiring. Follow the steps below to install the LiPo batteries:

1. Open the battery compartment cover.
2. Remove the battery holder for installing the 18650 batteries.
3. Insert 2S LiPo batteries into the compartment.
4. Plug the battery wiring of the LiPo battery into the JST port or balanced charging port accordingly.
5. Close the battery cover, pay attention to avoid pinching the battery wiring.

Note: Additionally, you can also use a USB Type-C cable to connect the transmitter's USB Type-C port for power supply.

Charging

This transmitter supports charging the 18650 or liPo batteries which are connected to the balanced charging port through the USB port. Pay attention to use a 5V/2A or above USB power adapter for charging.

Connect one end of the USB Type-C cable to the power source and the other end to the transmitter USB Type-C port.

Please use the standard charging cable of this transmitter to charge it. Improper use may cause damage to the battery and affect its service life.

Five-way Switch(Menu Navigation Button) and POWER button (Power/Return Button)

The functions of five-way switch (Menu Navigation Button) and the POWER button (Power/Return Button) are described as follows.

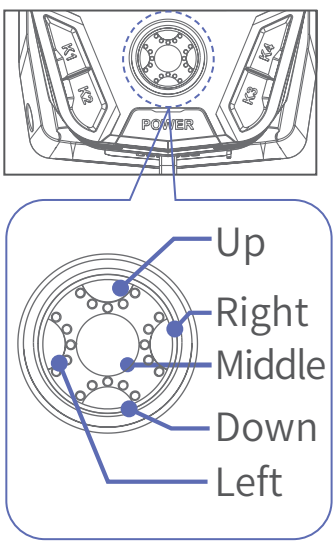

Five-way Switch(Menu Navigation Button)

In the Home state,

- Long press the Middle button for 2s to lock the screen, and long press it again to unlock;
- Long press the Middle button for 1s to select the sensor, short press the Left/Right buttons to select the function item, and short press the Middle button to enter the Sensors Set interface;
- Short press the Up button to enter the Home1, and short press the Middle button to activate the servo testing function; short press the Down button to enter the Home2; short press the Up, Down, Left and Right buttons to select function items; short press the Middle button to enter the selected function item;
- Short press the Middle button to enter the Main Menu interface.

In the Main Menu state,

- Short press the Up, Down, Left and Right buttons to select function items; short press the Middle button to enter the selected function item.

In the Function Menu state,

- Short press the Up, Down, Left and Right buttons

to select functions; short press the Middle button to confirm; long press the Middle button to reset all the functional data on the current page to default values.

In the Function Menu Settings state (the function item is flashing),

- Short press the Down or Up button to adjust the value or function item; long press to accelerate adjustment; short press the Middle button to confirm; long press the Middle button to reset the current item to its default value.

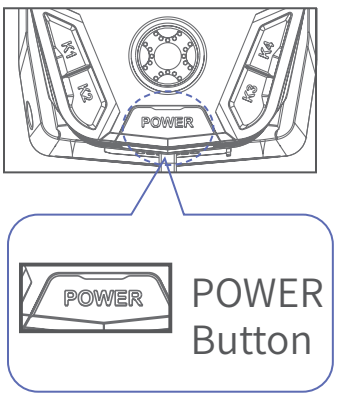

POWER Button (Power/Return Button)

Short press the POWER button to return to the previous interface or Home interface; long press the POWER button to shut down.

Powering On

Follow the steps below to turn on the transmitter:

1. Check to make sure that the batteries are fully charged and installed correctly.
2. Long press the POWER button for 0.5s, and follow the prompts on the screen to successfully power on.
   - The system will pop up a window prompting whether the failsafe is set for the current model. To turn off the failsafe prompt, select No or turn off the Failsafe Tips through System.

Powering Off

Follow the steps below to turn off the transmitter:

1. Turn off the receiver first.
2. Long press the POWER button until the screen turns off, indicating that the transmitter is powered off.

Make sure to disconnect the receiver power before turning

off the transmitter. Failure to do so can result out of control. Unreasonable setting of the Failsafe may cause accidents.

LED

This transmitter's LED includes the upper ambient lights (located on both sides of the cell phone holder mounting hole) and lower ambient lights (located on both sides of the POWER button).

Upper Ambient Lights

Set the colors and brightness levels of the upper ambient lights. You can set whether to turn off the upper ambient lights, be as the battery indicator, and adjust the color types and brightness levels of the ambient lights.

- Battery indicator: When the light is in green, it indicates that the battery voltage is greater than or equal to the alarm value; otherwise, it will be in red.
- Ambient light color: Red, Green, Blue, Yellow, Cyan, Purple, White or Dazzle optional.
- Brightness level: default to be 50%, and can be adjusted within the range of 0~100%.

Setup:

1. On the Home interface, short press the Middle button to enter the Main Menu.
2. Short press the Left/Down button to select System, and short press the Middle button to enter the system settings interface.
3. Select Set Up > Up Light, and the function item will begin to flash.
4. Short press the UP or Down button to select the appropriate function item, and then short press the Middle button.
5. Short press the POWER button to return to the previous interface.

Lower Ambient Lights

Set the colors and brightness levels of the lower ambient lights. The functions and settings are the same as the upper ambient lights, refer to the description of Upper Ambient Lights.

Stick Calibration

Use this function to correct for the mechanical deviation of the throttle trigger, steering wheel and VR2 3-Position Dial, for example, deviation occurred in the self-centering or maximum/minimum travel. By default, the calibration is finished. If you need to calibrate again, follow the steps below:

1. Go to Home > Main Menu > System, and select Stick Calibration, short press the Middle button, and select Yes on the pop-up interface to enter the function interface.
2. Turn the steering wheel to the max and min travel clockwise/ counterclockwise respectively, then release it. Push/pull the throttle trigger to forward/backward as far as it will go, and then release it.
3. Rotate the VR2 3-Position Dial to the max and min travel, then rotate it to its middle position.
4. Short press the POWER button, the system will pop up a prompt interface. If the calibration is successful, a calibration successful prompt interface will pop up. Short press the Middle button to exit.

   If the calibration fails, select No to recalibration, otherwise to cancel the calibration.

Failsafe

The failsafe function is used when the receiver loses radio signal and is out-of -control. The receiver performs channel output according to the set failsafe value to protect the safety of the model and personnel.

For i-BUS/PPM/PWM signal. It can be set to No Set, No Output or With Output.

No Set: The failsafe has not been set, and there is no output in case of out-of-control.

No Output: It is no output for i-BUS/PPM/PWM channel.

With Output: i-BUS/PPM/PWM channel output respectively the set value. Namely, you can set a value respectively for each channel from 1 to 11. By default, this value is the reading of current channel output value.

Setup:

1. Enter the function interface through the Home > Main Menu > RX Set > Failsafe. Short press the Middle button, and the function item will start flashing.
2. Select With Output, short press the Middle button, and the system will pop up a prompt interface, then adjust the corresponding controls to the desired positions and hold them if needed.Select Yes on the pop-up prompt interface, and short press the Middle button again.
3. To set an individual channel, select the channel to be set, short press the Middle button, and the function item will flash.
4. Select the appropriate value or adjust the corresponding control to the desired position and hold it. Short press the Middle button to save the settings.

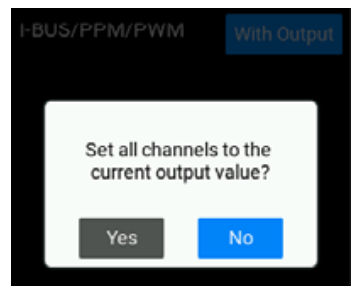

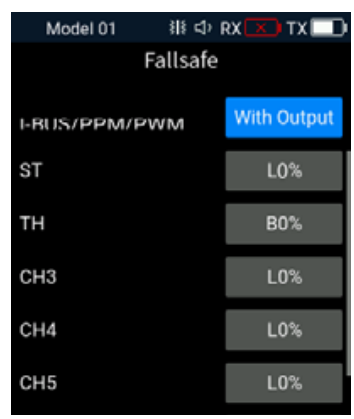

Notes:

1. Because the S.BUS signal information contains failsafe flag bits, the failsafe information can be transmitted to the subsequent devices by the failsafe flag bits ruther than by No Output state. The subsequent devices gives response according to the analysed information for the failsafe flag bits.
2. For the signal PWM/PPM/i-BUS without failsafe flag bits, it supports the setting of the output signal to OFF in case of failsafe, transmitting the failsafe information to the subsequent devices by No Output state.
3. It is No Set by default, then the receiver will not output when RC signal is lost.

Binding

The transmitter and the receiver have been pre-bound before delivery. If you need to use other receivers, follow the steps below to bind the transmitter and the receiver. The transmitter supports both ANT 2 Way and ANT 1 Way binding, and ANT 2 Way binding is the default setting. The transmitter will display the information returned by the receiver after the ANT 2 Way binding is completed. Before binding, it is necessary to set RF System, RF Standard, RX Type, Output, and Frequency according to the actual application scenario.

RF System Two modes are available: Routine and Fast. In Routine mode, it presents strong anti-interference performance against other devices, while Fast mode provides better coexistence with lower latency and power consumption.

RF Standard To select RF protocol, either ANT 2 Way or ANT 1 Way.

RX Type When the RF Standard is set to ANT 2 Way, the receiver type can be set to Standard or ESC.

Output Two combined output options are available, including four output modes, namely PWM/S.BUS, PPM/i-BUS, PWM/i-BUS and PPM/S.BUS. Choose according to your needs.

Frequency Set the frequency of channels. Options include Digital Servo, Analog Servo, and Other.

After the above settings, complete ANT 2 Way binding following the steps below:

Setup:

1. Select Start, and short press the Middle button, the transmitter will enter binding state.
2. Put the receiver into binding state.
3. When the receiver LED is solid on, it indicates successful binding.
4. Check whether the transmitter and receiver are operating properly. For re-binding, please repeat the above steps.

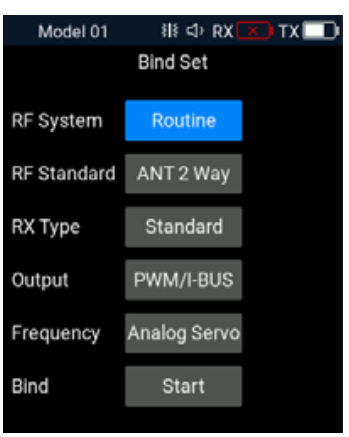

Notes:

1. If the transmitter that has its RF standard set to ANT 1Way enters bind mode, put the transmitter to exit binding state when the status of the receiver LED changes to slow flash, and at the same time, the receiver LED is solid on, indicating that the binding is completed.
2. The binding mode may vary according to the receiver model. Visit the Flysky official website to check the receiver manual or other relevant information.

Firmware Update

To put the transmitter into updating state. In case of updating the firmware of the transmitter, use this function to put the transmitter into updating mode first, then upgrade the transmitter's firmware.

⚠ **Warning**	• Do not unplug the USB Type-C cable while the firmware is updating.

This firmware can be updated via the following two ways.

- The firmware of this transmitter can be updated through the Flysky Assistant (The firmware of Flysky Assistant is available on the Flysky official website www.flysky-cn.com).
- Or update it by following the steps below:
  1. Download and open the latest official firmware.
  2. Connect the transmitter to the computer via the USB Type-C cable.
  3. Go to Home > Main Menu > System, and select TX Firmware Update, then short press the Middle button, a prompt screen will pop up, then select Yes, and short press the Middle button to enter updating state.
  4. After completing the above steps, click Update in firmware window on the computer to start the update.
  5. The transmitter will power on again when the updating process is finished. Then remove the USB Type-C cable and close the firmware.

⚠ **Attention**	• After a firmware update the receiver may not be connected. If this is the case the receiver firmware needs to be updated.

Receiver Firmware Update

The FS-R11P receiver firmware update should be done through FlySkyAssistant (only supported by version 3.0 and later, FlySkyAssistant firmware can be got from the official website www.flysky-cn.com).

This receiver fimware can be updated via the following two ways:

Mode Ⅰ : After the binding between the transmitter and the receiver (the LED of the receiver is solid on), connect the transmitter to the computer, then open the FlyskyAssistant on the computer to update the firmware.

Mode Ⅱ : Connect the transmitter to the computer. Then put the receiver to enter the forced update mode by referring to the following three ways (The LED of the receiver operates in three-flash-one-off manner repeatedly). Afterwards, open the FlyskyAssistant on the computer to update the firmware.

There are three ways to put the receiver into the forced update state:

- Power on the receiver while pressing and holding the BIND button for more than ten seconds, until the LED of the receiver operates in three-flash-one-off manner repeatedly, then release the BIND button.
- Power on the receiver first, then press and hold the BIND button for more than ten seconds, when the LED of the receiver operates in three-flash-one-off manner repeatedly, then release the BIND button.
- Connect the signal pins of the CH5 and BIND by using the binding cable, then power on the receiver.

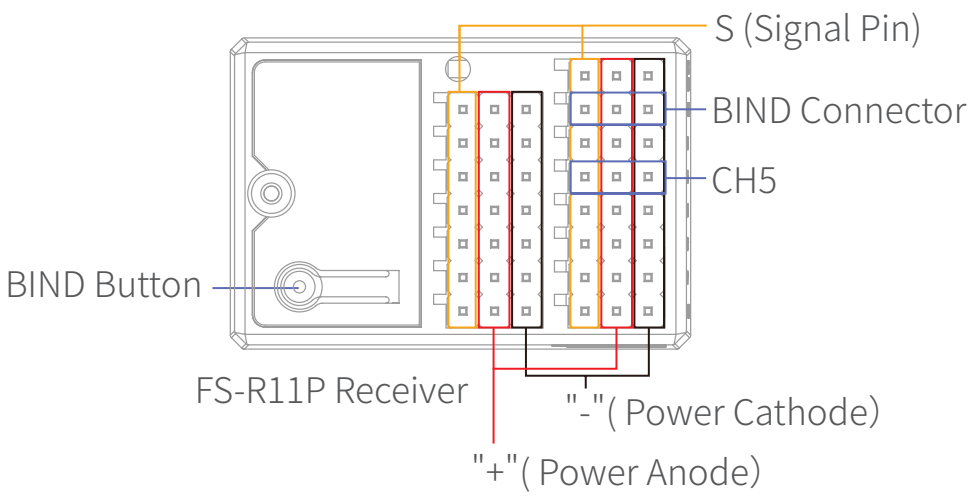

Note: the way of entering the forced update state may vary for the receivers. Please refer to the manual of the specific receiver.

- For more information, please read the full user manual.

Specifications

- Product Model: FS-G11P
- Compatible Receiver: FS-R11P(Receivers with ANT protocol)
- Compatible RC Model: Cars or boats
- Number of Channels: 11
- RF: 2.4GHz ISM
- Maximum Power: < 20dBm (e.i.r.p.) （EU）
- RF Protocol: ANT
- Resolution: 4096
- Data Connector: USB Type-C, 3.5mm Audio Jack(DSC), SD card slot
- Antenna: Two bulit-in antennas
- Input Power: 6-9V/DC; 18650*2PCS/2S LiPo
- Distance: No less than 300m (Ground distance without interference)
- Display: 3.5 inch 320*480 full dot color non-touch IPS screen
- Online Update: Yes
- Temperature Range: -10°C ~ +60°C
- Humidity Range: 20% ~ 95%
- Color: Black
- Language: Chinese or English
- Dimensions: 150.0*120.8*197.1mm
- Weight: 371g
- Charging Jack: Yes
- Certifications: CE, FCC ID: 2A2UNG11P00

Certifications

FCC Compliance Statement

This device complies with Part 15 of the FCC Rules. Operation is subject to the following two conditions: (1) this device may not cause harmful interference, and (2) this device must accept any interference received, including interference that may cause undesired operation.
Warning: changes or modifications not expressly approved by the party responsible for compliance could void the user's authority to operate the equipment.

This equipment has been tested and found to comply with the limits for a Class B digital device, pursuant to Part 15 of the FCC Rules. These limits are designed to provide reasonable protection against harmful interference in a residential installation. This equipment generates, uses and can radiate radio frequency energy and, if not installed and used in accordance with the instructions, may cause harmful interference to radio communications. However, there is no guarantee that interference will not occur in a particular installation.

If this equipment does cause harmful interference to radio or television reception, which can be determined by turning the equipment off and on, the user is encouraged to try to correct the interference by one or more of the following measures:
-- Reorient or relocate the receiving antenna.
-- Increase the separation between the equipment and receiver.
-- Connect the equipment into an outlet on a circuit different from that to which the receiver is connected.
-- Consult the dealer or an experienced radio/TV technician for help..

EU DoC Declaration

Hereby, [ShenZhen FLYSKY Technology Co., Ltd.] declares that the radio equipment type [FS-G11P]is in compliance with Directive 2014/53/EU.

The full text of the EU DoC is available at the following internet address:
www.flyskytech.com/info_detail/10.html

Environmentally friendly disposal

Old electrical appliances must not be disposed of together with the residual waste, but have to be disposed of separately. The disposal at the communal collecting point via private persons is for free. The owner of old appliances is responsible to bring the appliances to these collecting points or to similar collection points. With this little personal effort, you contribute to recycle valuable raw materials and the treatment of toxic substances.

CAUTION

RISK OF EXPLOSION IF BATTERY IS REPLACED BY AN INCORRECT TYPE.

DISPOSE OF USED BATTERIES ACCORDING TO THE INSTRUCTIONS

CE SAR statement

This equipment complies with Directive 2014/53/EU radiation exposure limits set forth for an uncontrolled environment. End user must follow the specific operating instructions for satisfying RF exposure compliance.

This transmitter must not be colocated or operating in conjunction with any other antenna or transmitter.

The portable device is designed to meet the requirements for exposure to radio waves established by European Union market(France). These requirements set a SAR limit of 2W/kg averaged over ten gram of tissue.

The highest SAR value 0.112W/kg reported under this standard during

product certification for use when properly worn on the body.

FCC SAR

For body-worn operation, the device has been tested and meets the FCC RF exposure, the maximum sar value is 0.246W/Kg at 0mm

CAUTION

- replacement of a battery with an incorrect type that can defeat a safeguard (for example, in the case of some lithium battery types);
- disposal of a battery into fire or a hot oven, or mechanically crushing or cutting of a battery, that can result in an explosion;
- leaving a battery in an extremely high temperature surrounding environment that can result in an explosion or the leakage of flammable liquid or gas; and
- a battery subjected to extremely low air pressure that may result in an explosion or the leakage of flammable liquid or gas.

感谢您购买富斯公司的产品!欲知更多产品信息,请浏览以下官方网站:www.flyskytech.com. 如果您在使用中遇到任何问题,请先查阅发射机使用说明书。如果问题仍未得到解决,请直接联系当地经销商或者访问官网联系客服人员。

注意事项！

开始操作前请务必阅读以下安全信息!

- 请不要在夜晚或雷雨天气使用本产品,恶劣的天气环境有可能导致遥控设备失灵。
- 请不要在能见度有限的情况下使用本产品。
- 请不要在雨雪或有水的地方使用本产品。如果有液体进入到系统内部,可能会导致运行不稳定或设备失灵。
- 信号干扰可能导致设备失控。为保证您和他人的安全,请不要在以下地点使用本产品:

基站附近或其他无线电活跃的地方

人多的地方或道路附近

有客船的水域

高压电线或通信广播天线附近

- 当你感到疲倦、不舒服，或在摄入酒精或服食导致麻醉或兴奋的药物后，不要操作本产品，否则可能对自己或他人造成严重的伤害。
- 2.4GHz 无线电波段完全不同于之前所使用的低频无线电波段。使用时请确保模型产品在您的视线范围内，大的障碍物将会阻断无线电频率信号从而导致遥控失灵模型失控。
- 在使用过程中，严禁紧握发射机天线，否则将会大大减弱无线电传播信号的质量和强度， 导致遥控失灵模型失控。
- 在操作或使用模型后，请勿触摸任何可能发热的部位，如发动机、电机等。这些部件可能非常热，容易造成严重的烧伤。

- 遥控设备使用不恰当可能导致操作者或他人严重受伤，甚至死亡。为保证您和设备的安全，请仔细阅读使用说明书并按照要求进行操作。
- 使用前必须确保本产品与模型安装正确，否则可能导致模型发生严重损坏。
- 关闭时，请务必先关闭接收机电源，然后关闭发射机。如果关闭发射机电源时接收机仍然在工作，将有可能导致遥控设备失控或者引擎继续工作而引发事故。
- 操控时，请先确认模型所有舵机的动作方向与操控方向一致。如果不一致，请调整好正确的方向。
- 当遥控距离持续较远时，有发生失控的可能。请适当缩短遥控的距离。

注意：使用类型不正确的电池可能发生爆炸风险，请妥善处理使用完的电池。

发射机概览

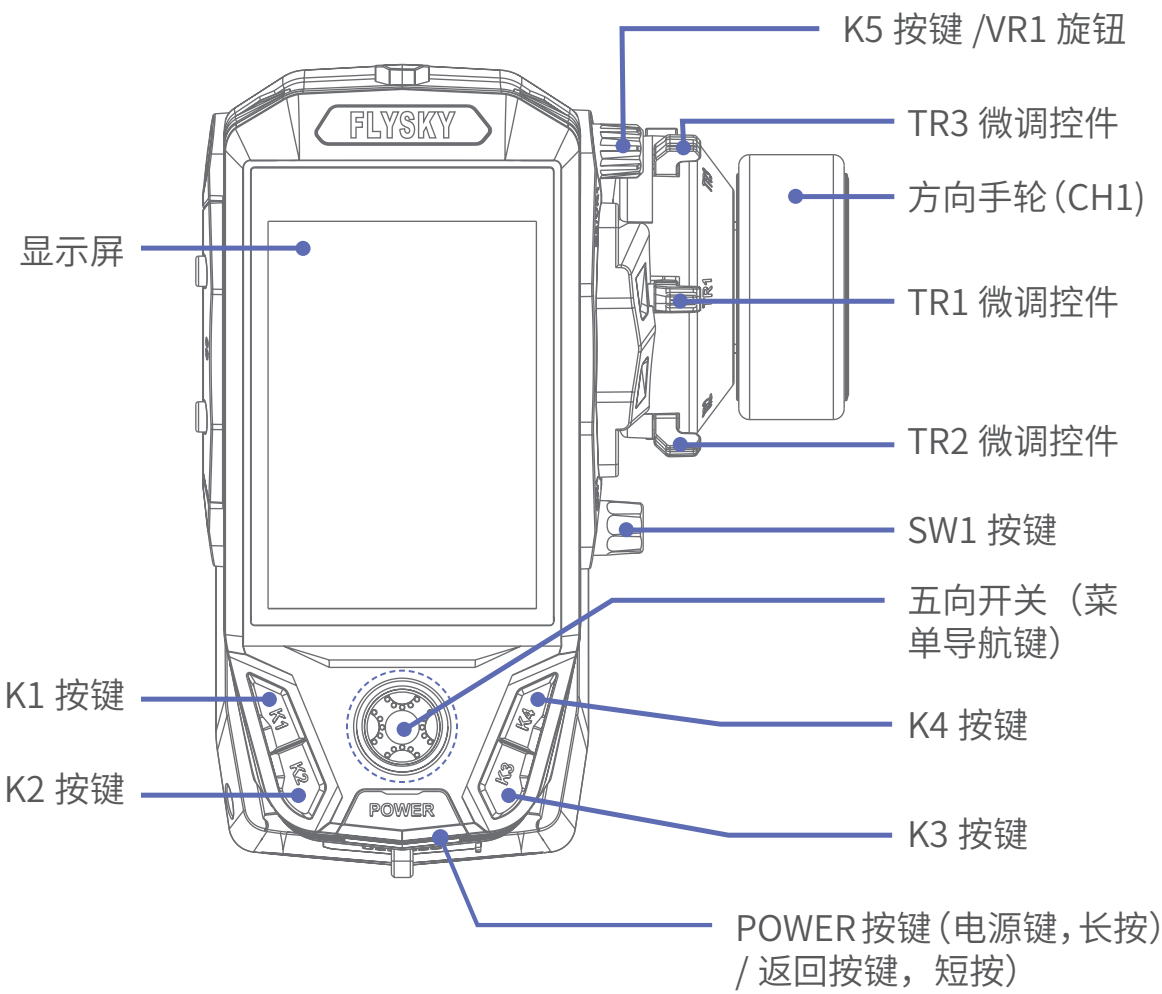

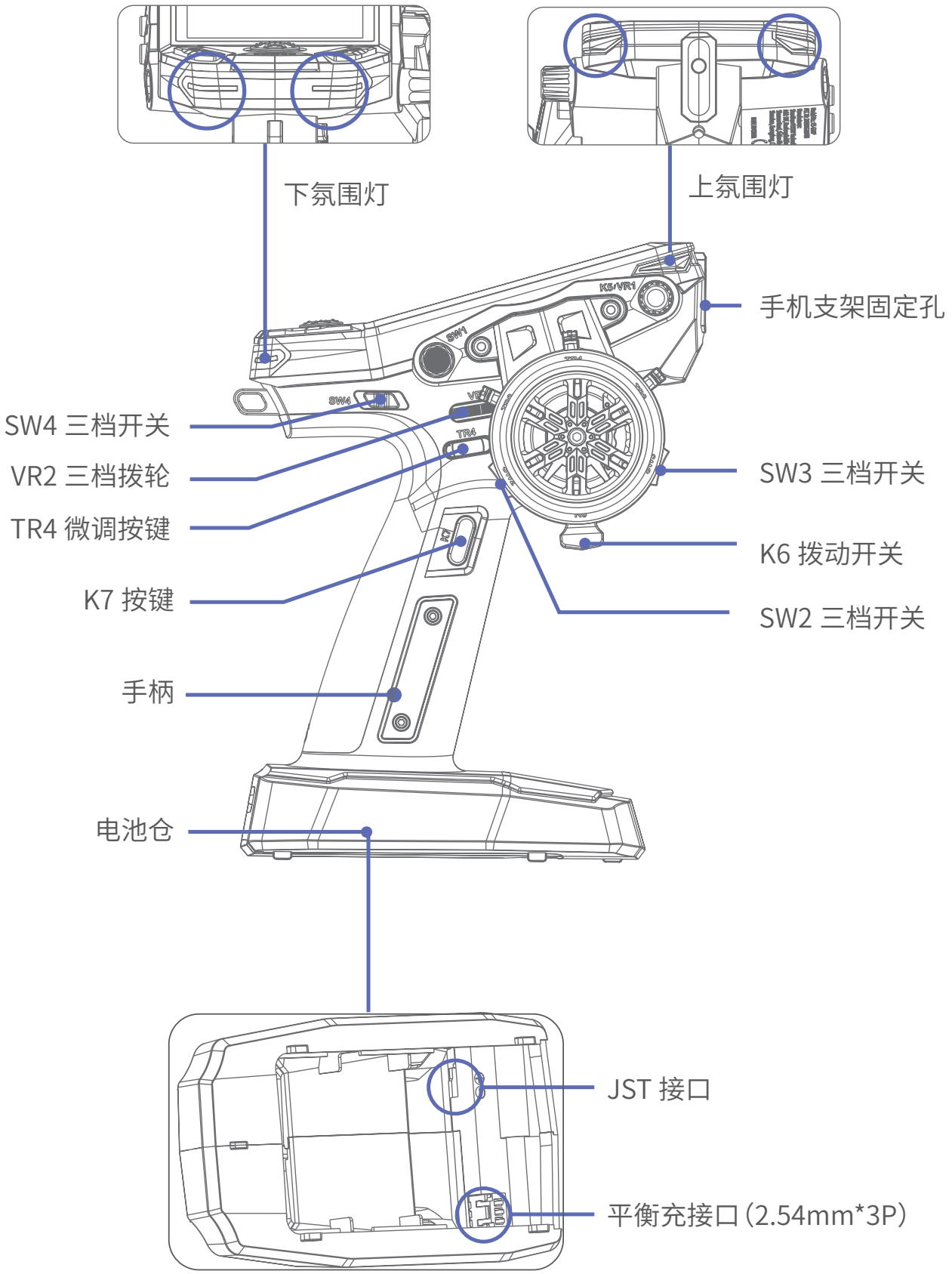
下氛围灯
上氛围灯
手机支架固定孔
SW4 三档开关
VR2 三档拨轮
TR4 微调按键
K7 按键
手柄
电池仓
SW3 三档开关
K6 拨动开关
SW2 三档开关
JST 接口
平衡充接口（2.54mm*3P）

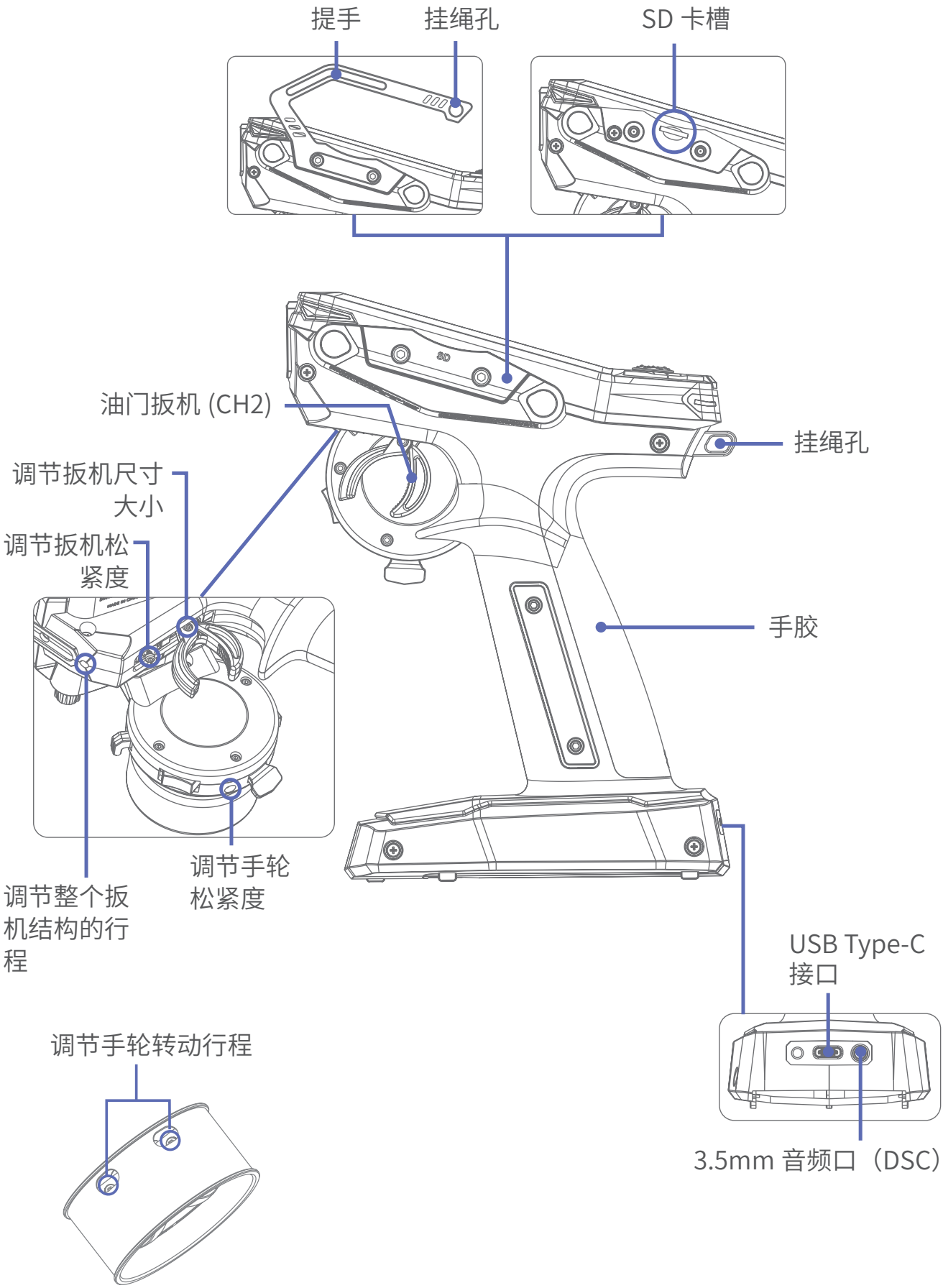
提手
挂绳孔
SD 卡槽
油门扳机 (CH2)
挂绳孔
调节扳机尺寸大小
调节扳机松紧度
手胶
调节整个扳机结构的行程
调节手轮松紧度
USB Type-C 接口
3.5mm 音频口（DSC）
调节手轮转动行程