7.5 Failsafe

The Failsafe function can be set in the following three ways:

- Set to disable the signal output of i-BUS-out and PPM protocol interfaces in case of out-of-control, i.e., no output at i-BUS-out & PPM interfaces in case of losing control.
- Set failsafe values channel by channel: Free/Fixed value/Hold.
- [Set all fixed value channels], namely, you can set the output values of all channels controlled by a control to the current value, and this value will be output when the system is losing control.

Failsafe Test Function

Used to simulate the out-of-control case, when the model is out-of-control, the transmitter will shut down the RF, then the model will enter the out-of-control state. All channels will output according to failsafe settings.

Setup:

1. Tap , a popup window comes along with it as shown. Press and hold over 1 second, then the system turns off RF. And the receiver output channel value according to failsafe settings.
2. Release , the RF is on and the connection is restored.

微信公众号 Bilibili Website Facebook

i-BUS&PPM No Output

This function is for i-BUS and PPM signals. After [i-BUS/PPM No Output] is enabled, regardless of the setting of the failsafe, these two types of failsafe signals are always no output. If the function isdisabled, after losing control, you can set by channel: set to fixed value or keep the last output value. By default, this function is enabled.

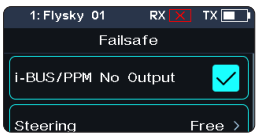

Tap ☑ at the right side of [[i-BUS/PPM No Output], the check box next to right of the option is not ticked , it indicates that the function is disabled.

Setting A Separate Channel

Used to set the output signal states of channels respectively: Free means that there is no output in case of out-of-control; Hold means the last channel value is kept in case of out-of-control; Fixed Value means that you can set the failsafe output value by moving the control, then the value set will output in case of out-of-control.

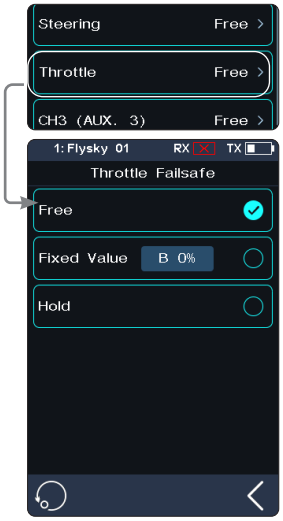

Setup:

1. Tap the channel you want to set.
2. Click an approprate option as desired. If the fixed value is selected, move throttle trigger(steering wheel, button or knob)to the desired position and hold it, then click ◀ to finish the settings.

Setting All Fixed Value Channels

Can be used to set the output value of all channels controlled by a control that has been set to a fixed value after out-of-control.

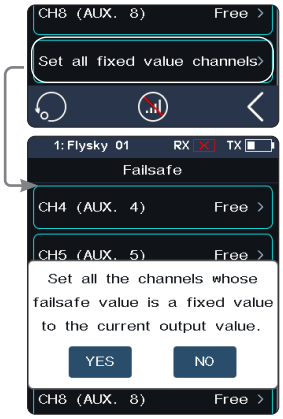

Setup:

Tap this function while moving the control to the desired position and holding, after that a prompt interface comes along with it as shown on right. Click"YES" to finish.

Note: Gas-powered models are slightly different with Battery Powered models when it comes to failsafe setup.

Gas-powered: It is recommended to set failsafe setting as if the vehicle's brake state, that is, set the throttle channel output value of the vehicle when subjected to brake as the failsafe value. The braking effect can be customized accordingly.

Battery Powered:

1. It is recommended that the failsafe is set to Free. In case of out-of-control, it will enter braking state when ESC does not received signals.
2. It is also possible to set the failsafe settingas if the vehicle's brake state. Same as the gas-powerd.

- Some ESCs also use breaking as reverse, make sure to check this with your model.

7.6 Servos Frequency

This function is used to select the frequency of channel data PWM signals. The function includes analog servo (95 Hz), digital servo (380 Hz), and custom frequency. You can select or set the correct output frequency value according to the servo used. By default, the system adopts the digital servo. The custom frequency adjustment range is 50-400 Hz.

The servos frequency varies slightly with the connected receivers.

For the Classic Edition Receiver

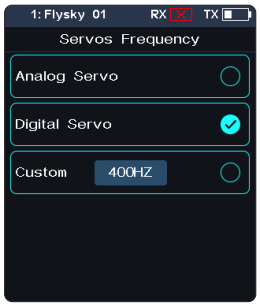

1. Click [Servos Frequency].
2. Click the corresponding option. Click ◀ to return to the previous level interface.
   - If the transmitter RF Setting is set to [AFHDS 3 1 way], modify the servo response speed and then tap ◀. The system prompts "It takes effect after bind or re-bind. Are you sure you want to bind?"
3. If you choose [Custom], click "+" or "-" to adjust the frequency.

For the Enhanced Edition Receiver

[SR]: One of the specifications in the servo frequency (PWM frequency is 833 Hz).

[SFR]: One of the specifications in the servo frequency (PWM frequency is 1000 Hz).

Note: the conventional servo response speed (PWM frequency) is 50-400 Hz. The delay of the whole system will be greatly improved when SR and SFR are selected. Make sure that the adapted servo supports the corresponding frequency. Otherwise, it may cause the servo not to work properly or even damage the servo.

Setting A Channel

Sets PWM frequency for a channel.

[Synchronized with RF]: The digital signal of low frequency is synchronized with the digital signal of radio frequency.

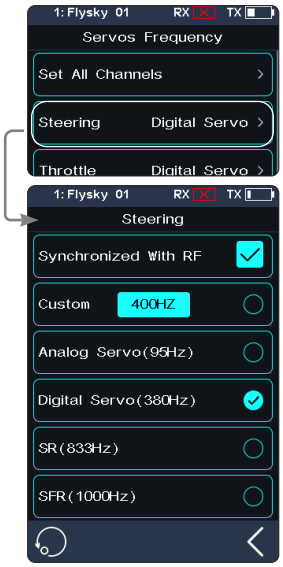

Setup:

1. Click [Steering Digital Servo] or other options to enter the function setting interface.
2. Click the corresponding servo frequency according to the actual state of the adapted receiver. Click ◀ to return to the previous level interface.
   - Click the check box on the right of [Synchronized with RF]. The icon will change to ☑. The servo frequency of this function will be synchronized to RF after it is checked.
3. If you choose [Custom], click "+" or "-" to adjust the frequency value.

Setting All Channels

Sets PWM frequency for all channels.

For function Setup, refer to the Setup section of Setting A channel above.

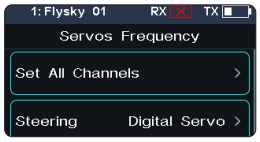

微信公众号 Bilibili Website Facebook

7.7 i-BUS2 Setup

This function is used to set up the i-BUS2 devices. For details, see 6.26 i-BUS2 section.

7.8 i-BUS Setup

This function is used to set up the i-BUS expansion module.

The i-BUS function is mainly used for servo expansion. If a cable is too short or the number of servos exceeds the outputs for the receiver, the i-BUS serial bus receiver provides a convenient option for expansion. When using the i-BUS serial bus receiver, make sure that it is powered separately to ensure that servos have sufficient power.

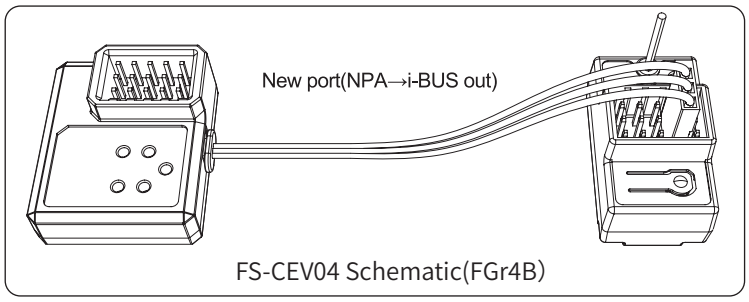

FS-CEV04 Schematic(FGr4B)

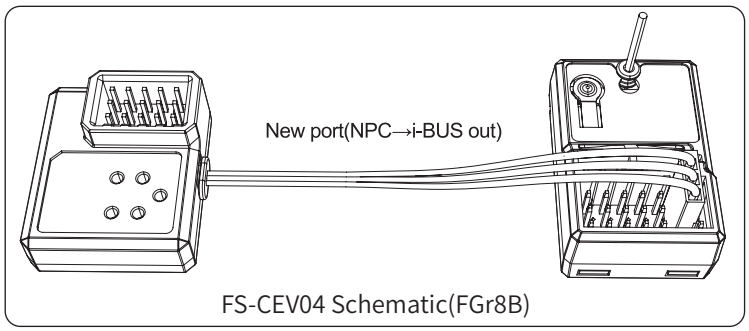

FS-CEV04 Schematic(FGr8B)

Setup:

1. Turn on the transmitter and enter [MODEL], then tap [Channel Number Definition], and select the number of channels to be set (optional 2、4、6、8、10、12、18 channels, the system defaults to 8 channels).
2. Go to [RX SET] and bind the transmitter and receiver.
3. Tap [RX Interface Protocol] and select [i-BUS out].
4. Connect the FS-CEV04 to the FGr8B/FGr4B receivers' [i-BUS out] interfaces.
5. Touch [i-BUS Setup] and select the channel to be assigned, (touch "channel X", the system display a "Assigning channel X, Press the corresponding key on the serial BUS receiver to assign"). Use the appropriate tool to press the K1, K2, K3 or K4 button on the FS-CEV04 to assign the selected channel to C1, C2, C3 or C4. If successful, the transmitter will display: "Channel assigned to interface X / Servo X".
6. Connect the servo to the corresponding port and check if it is working as expected.
7. Repeat the above steps as needed.

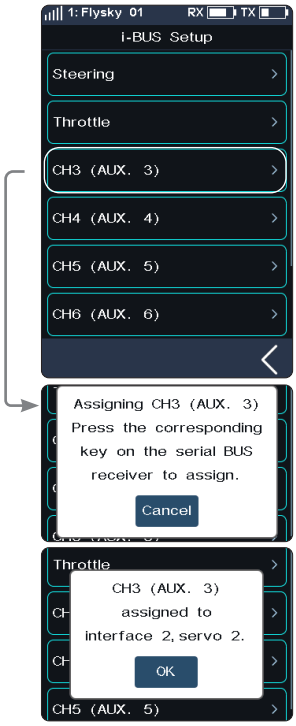

7.9 Config PWM Converter

This function allows you to configure the corresponding receiver to a PWM converter. After the setting is successful, the receiver is used as a PWM converter, and the interfaces output PWM signals.

Note: This function is not available for all receivers. For the classic receiver, only the FGr4 and FTr10 receivers are availabe.

- The receiver which is set as the PWM converter can be converted into a receiver by rebinding the transmitter, and then used normally as a receiver after successfully rebinding the transmitter.

[i-BUS To PWM]: This feature is adapted to classic version or enhanced version receivers to config as PWM converter. For the classic version receivers, after it is set as a PWM converter, its SENS interface is connected to the interface of the receiver outputting i-BUS or i-BUS out. For the enhanced version receivers, after it is set as a PWM converter, its NPA interface is connected.

[i-BUS2 To PWM]: This feature is adapted to enhanced version receivers to config as PWM converter. After it is set as a PWM converter, its NPA interface is connected the interface of the receiver outputting i-BUS2. And you can set related parameters through [i-BUS2], refer to 6.26 i-BUS2 section.

i-BUS To PWM

Setup:

1. Enter the interface of Config PWM Converter and tap [i-BUS To PWM].
2. Tap [Start Channel] to enter the setting interface, then set the start channel for the PWM converter.
   - For example, if the receiver has 4 channels, and since one of channels is used as an extension interface, then the start channel of the PWM converter can be set to "4".
3. Tap [Servos Frequency Digtal] to enter the setting interface to set the servo frequency for the PWM converter. Then click [Start Config], the configuring interface comes along.
4. Put the receiver to enter the binding state, after the status of the receiver LED changes from fast flash to two-flash-one-off, it indicates the configuration is finished. Then click ◀ to return.

If you set the receiver as a i-BUS2 PWM converter, there are not need to set [Start Channel] and [Servos Frequency].

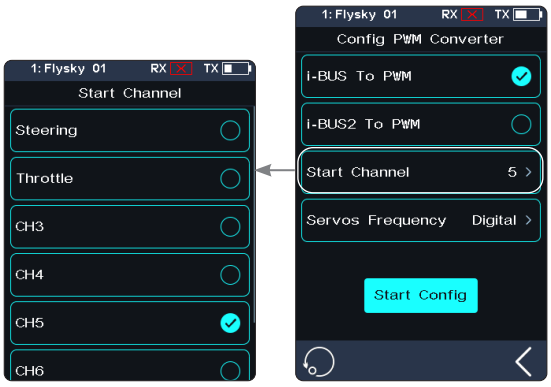

微信公众号 Bilibili Website Facebook

7.10 RSSI Output Setup

Through this function, you can select a channel to output the signal strength value of the receiver. After the function is enabled, the selected channel does not perform the output of transmitter's corresponding channel function, but outputs the receiver's signal strength value. This feature is necessary for FPV players with autopilot.We recommend you to select the CH14 or any auxiliary channel. You can make corresponding adaptations in the settings to view the RSSI information on FPV glasses.

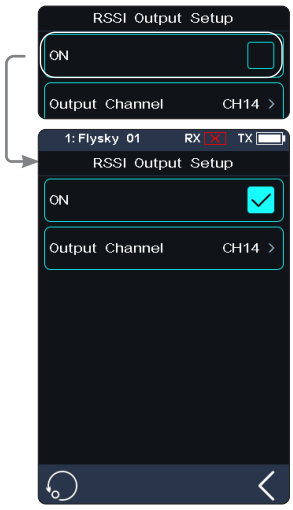

Setup:

1. Tap the check box on the right side of [ON] to enable this function.
2. Click [Output Channel] to enter, and tap the corresponding channel. Click ◀ to return to the previous level interface.

7.11 RX Battery Monitor

This function is used to detect the voltage status of the receiver or corresponding Sensor battery.

Set the high and low battery voltages according to the actual usage of the receiver battery and the remaining battery level displayed through the icon in the upper right corner of the interface. The transmitter will promptly send an alarm according to battery conditions.

When the receiver or sensor battery voltage is lower than the [Alarm voltage] alarm value, the transmitter will report "The receiver voltage is low".

[Sensor]: The voltage of the Voltage sensor is used as the voltage of the receiver. [Internal Voltage], [External Sensor Voltage], [BVD Voltage] or [ESC Power]can be selected. After selection, it can be displayed and alarmed through the transmitter.

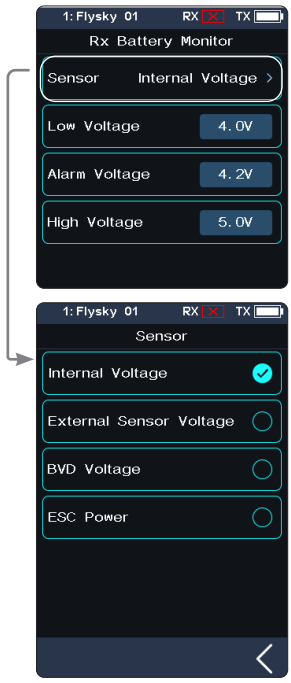

Setup:

1. Tap [Rx Battery Monitor] to enter the setting interface.
2. Click [Sensor] to enter and select an internal or external sensor.
3. When set the Sensor as the voltage sensor, then set the [Low voltage], [Alarm voltage], and [High voltage] values; When set the Sensor as the ESC Power, [Alarm Power] and [Full Power] can be set.
   - [Low Voltage]: It is corresponding to receiver battery level which is 0%; [High Voltage]: It is corresponding to receiver battery level which is 100%.
   - [Alarm Power]: It is corresponding to power in case of the alarm; [Full Power]: It is corresponding to ESC battery level which is 100%.

Notes:

1. [ESC Power] is only applicable for Hobbywing XERUN AXE R2 ESC.
2. When multiple XERUN AXE R2 ESCs are connected, the setting is for the first ESC connected.
3. [Internal Voltage] is corresponding to the voltage of the receiver; [External Sensor Voltage] is corresponding to the voltage detected by the FS-CVT01 sensor; [BVD Voltage] is corresponding to the voltage detected through BVD function; [ESC Power] is corresponding to the power of XERUN AXE R2 ESC.

7.12 Range Test

This function is used to test whether wireless communication between the transmitter and the receiver is normal.

As the actual remote control distance between transmitter and receiver is far, it is hard to test whether the radio frequency is normal by controlling a distance of several hundred meters between the transmitter and receiver in practice. Theoretically, the remote control distance in this function will be reduced to 30-40 meters. So, you can test whether wireless communication between the transmitter and the receiver is normal at a close distance when the function is enabled. This can save testing time.

Setup:

1. Make sure the transmitter and receiver are bound.
2. Enter the [Range Test] menu and press the SW1-R button.
3. One person stands in place with the model in hand, and the other person holds the transmitter and gradually moves away to 30-40 meters and walks around with this distance as a radius centered on this model.
   - Please make sure the transmitter is installed with phone holder, with use of the standard version firmware.
   - Make sure that the transmitter antenna is unobstructed and that there are no objects or sources of interference between the transmitter and the receiver.
4. Check the RSSI on the transmitter. If the signal strength is high and stable, it means that the radio frequency of this system works normally.

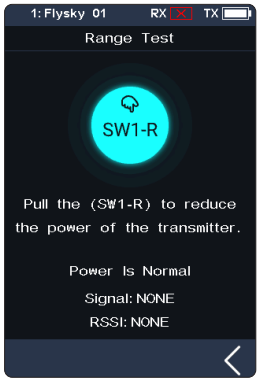

7.13 BVD Voltage Calibration

The BVD voltage is calibrated before delivery from the factory. This function can be used when there is an excessive deviation between the detected and actual voltages. The BVD voltage detection range is from 0 to 100V.

Note: This function is not available for classic version receivers. Pay attention to correctly connect the BVD cable to the anode and cathode terminals of the battery. The connection diagram is as follows.

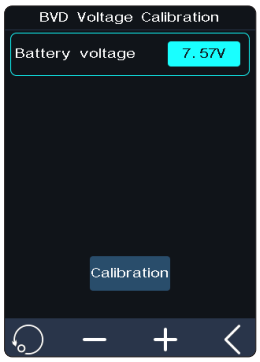

Setup:

Connect the BVD detection line correctly before setting, and then perform calibration.

Note: please refer to the voltage value of multimeter for calibration.

1. Click [BVD Voltage Calibration] to enter the function setting interface.
2. Click "+" or "-" to change the battery voltage value as needed.
3. Click [Calibration]. After successful calibration, click "YES" in the pop-up window reminder.

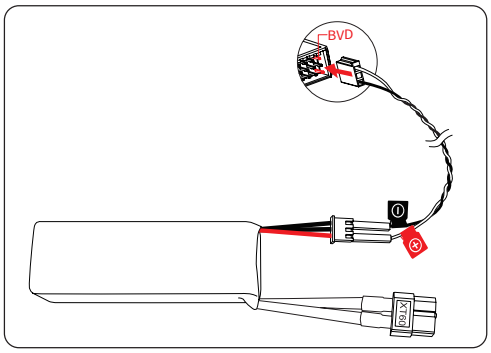

Note: When not adjusted, the [Battery voltage] value is displayed the voltage value in realtime, if set, the edited value is displayed.

微信公众号 Bilibili Website Facebook

7.14 Low Signal Alarm

This function is used to enable or disable the low signal alarm function.

[Low Signal Alarm]: If checked, the system will alarm automatically if the signal strength of the receiver is lower than 30.

7.15 Update Receiver Firmware

After the transmitter has updated the firmware, and at the time, it can not bind with the receiver, then the receiver firmware is needed to be updated.

Setup:

Touch [Update Receiver]:

- Some receivers such as GMR need to be updated with "Flysky Assistant".
- If the transmitter has successfully coded and the connection is established, if the receiver is the latest version, a pop-up prompt will appear [The current version is the new version, no upgrade is required!]. If the receiver is an old version, a pop-up prompt [Are you sure to update the receiver?]. Click [OK] to update the receiver;
- If the receiver and the transmitter are not connected, then enter the Select Receiver interface, check the receiver to be connected and pop up a prompt [Please connect XX or enable XX enter the mandatory update mode]. Click [OK]!

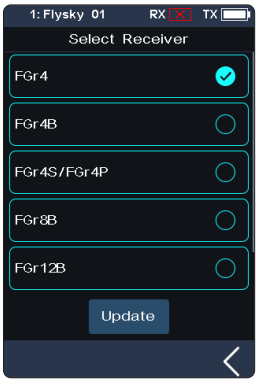

After entering the update state, When the progress is 100%, it indicates the update is successful.

Note: You must update the transmitter's firmware before updating the receiver's firmware.

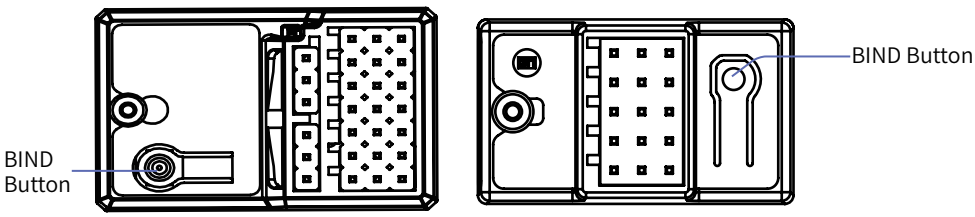

FGr8B FGr4B

The steps of the forced update of the receiver are as follows:

1. Press and hold the Bind key on the receiver over ten senconds while powering on the receiver, then release the Bind key after the receriver LED works in flash-three-one-off state repeatedly.

   Or Power on the receiver first, then press and hold the BIND button for more than 10 seconds, the LED of the receiver will be in a state of three-flash-one-off, then release the BIND button.
2. Power on the transmitter and select [Update Receiver]. Click the corresponding receiver. Select "OK" on the pop-up box. Click [Update] to enter the update state.
3. When the update has finished, the receiver LED flashes slowly.

8. SYSTEM

This section introduces details functions relate to system and their use.

8.1 USB Setup

USB Setup is used to support the output signals of Type-C port.

[USB Function]: When the input or output is USB signal, you can control the simulator and connect the computer and FlySky Assistant.

[Trainer Mode]: When the input or output is PPM signal, it can realize the trainer and head tracker functions.

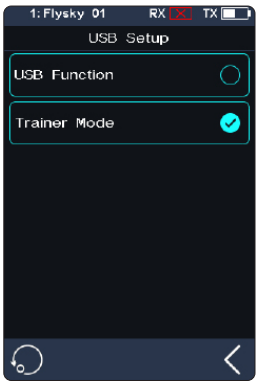

Setup:

1. Click [USB Setting] to enter the selection interface.
2. Select the corresponding function as needed.
   - Select USB Function. The trainer function is not displayed(displayed in case of selecting the trainer function) .
3. Click to return and save.

8.2 Theme

It is used to set the overall color style of the system, with 4 options.

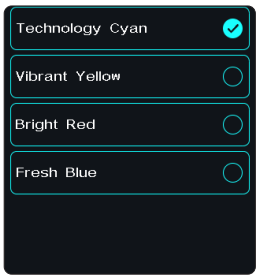

Setup:

1. Touch [Theme] to enter the menu.
2. Select a theme as your desired.
3. Touch to return to the previous menu and save the setting.

微信公众号 Bilibili Website Facebook

8.3 Wallpaper

It is used to set the wallpaper of home screen and main menu.

[Home Screen Wallpaper]: Sets the wallpaper of home screen.

[Main Menu Wallpaper]: Sets the wallpaper of the main menu.

Wallpaper preview: To preview the wallpaper in full screen and hide the option, click the area outside the corresponding function option. Click again to exit the preview.

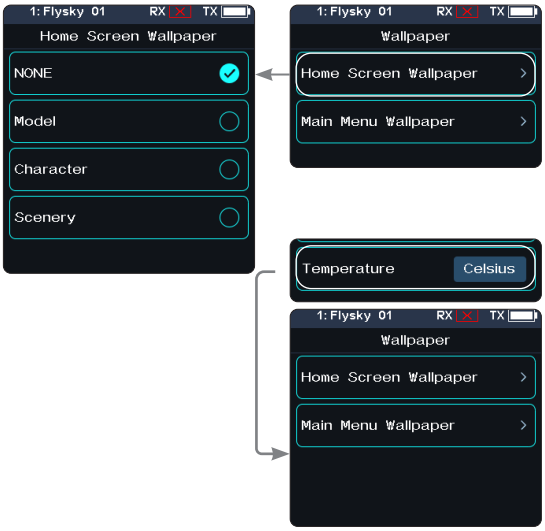

Setup:

1. Touch [Wallpaper] to enter the menu.
2. Select a wallpaper as your desired.
3. Touch ◀ to return to the previous menu and save the setting.

8.4 Units

Choose what units to use for length and temperature.

[Length]: Select between metric and imperial system. The default is Metric.

[Temperature] : It can be selected in Celsius and Fahrenheit. The default is Celsius.

The box in highlighted is the currently selected setting.

Setup:

1. Touch [unit] to enter the menu.
2. Select a unit from the list.
3. Touch ◀ to return to the previous menu and save the setting.

8.5 Backlight Adjustment

This function controls the backlight brightness.

Note: Turning the brightness up will use more power and as such, the longer the Backlight timeout, the more power consumption, the shorter the battery using time.

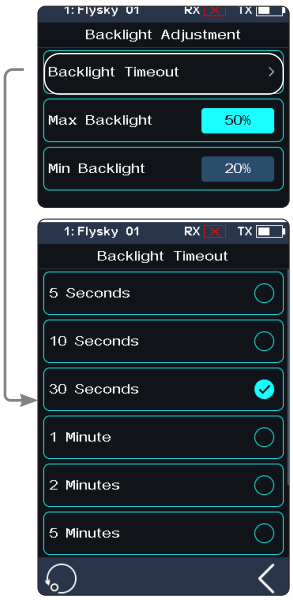

[Backlight Timeout]: Select the delay time. That is, when there is no action, the screen is reduced to a minimum brightness state after the corresponding backlight delay time, with options of 5 seconds, 10 seconds, 30 seconds, 1 minute, 2 minutes, 5 minutes, 10 minutes of backlight delay and normal light.

Tap[Backlight Timeout]to enter, and select an approprate item as needed. Then, click ◀ to return to save.

[Max Backlight]: The backlight state of the transmitter display when the backlight is strongest. The adjustment range is 10%-100%.

Tap[Max Backlight], then click "+" or "-" to change the percentage as required.

[Mini Backlight]: The backlight state of the transmitter display when the backlight is weakest. The adjustment range is 0%-50% (the screen is not bright at 0%). The adjustment method is the same as above.

The adjustment method is the same as above.

8.6 Sound

This function is used to turn on or off sound of different function and the adjustment of volume, including system sound, alarm sound, power-on/power-off sounds, and etc.

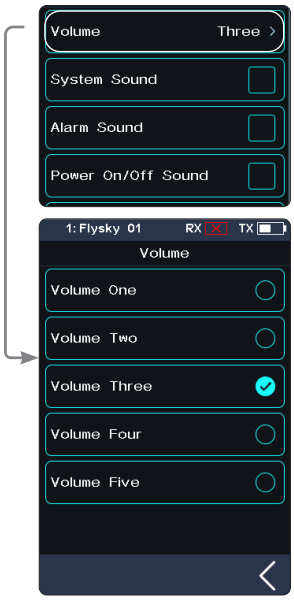

[Volume]: To set the volume.

Tap [Volume] , then select the desired volume from the list. Touch ◀ to return to the previous menu, and save it.

[System Sound]: To turn on or off system sound.

Click the option box on the right side of the interface. The icon will change to ☑ , indicating that the system sound is enabled.

[Alarm Sound]: To turn on or off alarm sound.

[Power On/Off Sound]: To turn on or off power-on/off sound.

Click the option box on the right side of the interface to enable. After it is enabled, the system will sound "Welcome to Noble Pro Plus" when turned on, and the system will sound "Shutting down" when turned off.

[Trim Sound]: To turn on or off power on/off sound.

[Timer Sound]: To turn on or off timer related prompt sound.

[Sensor Sound]: To turn on or off sensor alarm related prompt sound.

[Menu Operation Sound]:To turn on or off prompt sound when a touch screen operation takes effect.

Note: For details about how to set other functions, refer to system sound settings.

微信公众号 Bilibili Website Facebook

8.7 Vibration

This function is used to enable or disable the vibration of different function and and the adjustment of vibration levels, including system vibration, alarm vibration, etc.

[Vibrate Level]: To set the intensity of vibration level.

Tap [Vibrate Level], then select the desired level from the list. Touch to save.

[System Vibrate]: To turn on or off system vibration.

Tap the box at the right of "System Vibrate". If there is a check in the box, indicating the function is enabled.

[Alarm Vibrate]: To turn on or off alarm vibration.

[Power on/off Vibrate]: To turn on or off power on/off vibration.

[Trim Vibrate]: To turn on or off the trim operation of the prompt vibration.

[Timer Vibrate]: To turn on or off timer related prompt vibrations.

[Sensor Vibrate]: To turn on or off sensor alarm related prompt vibrations.

[Menu Operation Vibrate]:To turn on or off prompt vibration when a touch screen operation takes effect.

Note: For details about how to set other functions, refer to system vibration settings.

8.8 LED

The LED function can change the color of the LED strip which is located above the power button of the transmitter, as well as the brightness adjustment of the LED strip. And it can also be set as the power capacity indication.

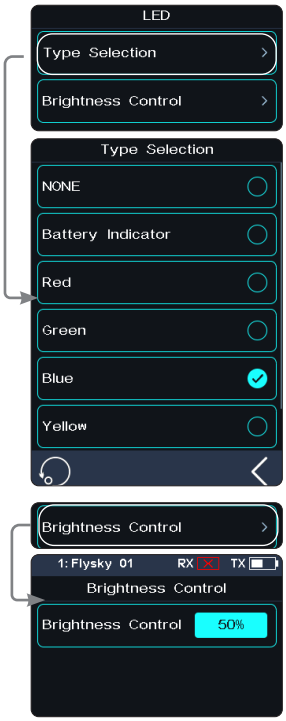

Type Selection

To set the color of the LED, or to turn on or off the LED.

Setup:

1. You can choose to turn off the LED.
2. LED can be used for power capacity indication (displaying different colors according to current battery voltage);
   - High-green
   - Medium-yellow
   - Low-red
3. Select a color from the list.

Brightness Control

To set the LED brightness.

Touch "+" or "-" to adjust the LED brightness.

After setting, tap to save and exit.

8.9 Auto Search Receiver

When the Auto Search Receiver is checked, then, automatically switch to the model corresponding to the currently powered on receiver in case of the transmitter's power-on. Namely, to search for the power-on receiver which has bound to the transmitter in AFHDS3 2 Way mode.

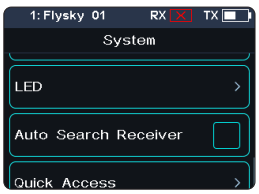

Setup:

Tap the box at the right of the [Auto Search Receiver]. If there is a check ☑ in the box, indicating that the function is active.

Note: In the auto search of receiver, you must ensure that only one model that needs to be controlled is powered on (power off other models).

8.10 Quick Access

This function is used to set up the Up, Down, Left and Right quick sliding screen functions of the main interface. Users can customize the sliding screen interface according to their needs.

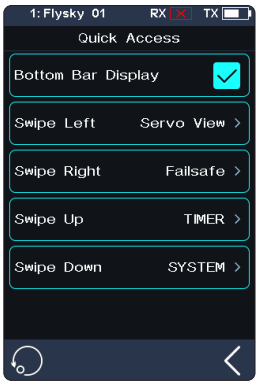

[Bottom Bar Display]: It is used to set whether to display the bottom bar of the home screen.

Tap [Bottom Bar Display], then the icon on the right will change to ☑, the function is enabled. Namely, the bottom bar of the home interface will display. When the bottom bar does not display, you can slide screen left to enter the main menu.

[Home-Screen Quick Access]: The [Home-Screen Quick Access] can help users find setting interfaces quickly. For example, when users want to check the lap counting time after the function is enabled in the model operations, users can use this function to enter the timer interface quickly.

Setup:

1. Enter in the function interface, click the corresponding function option to choose it; and select NONE to avoid quick operation;
2. Click ◀, so you can save the settings.

Note: In case of sliding the screen, it recomends as close to the edge of home screen as possible to slide.

8.11 Mian Screen Lock Setup

This function is used to set the state of the transmitter after the main interface is locked.

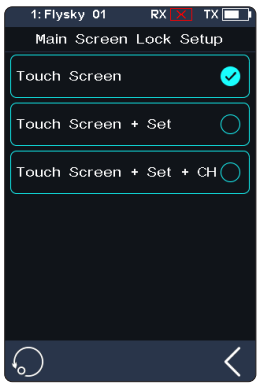

[Touch Screen]: It can prevent the transmitter screen from being touched by mistake, because this may change the parameters that have been set.

[Touch Screen + Set]: Only channels are controllable after selection. This can avoid changing the set parameters when someone else perform operations or accidentally toggles a switch for personal reasons.

[Touch Screen + Set + CH]: After locking, all knobs, keys, or trims are unavailable. This can prevent others from modifying channel data when operating on behalf of others or changing setting parameters by accidentally toggling a switch for personal reasons.

You can click the corresponding function according to your needs. If it becomes ☑, indicating the function is enabled.

微信公众号 Bilibili Website Facebook

8.12 Standby Timeout

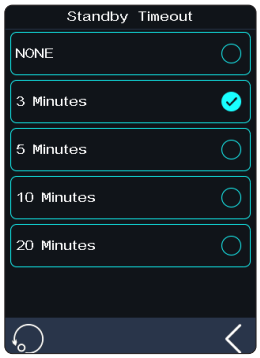

This function is used to set Standby Timeout intervals or no standby timeout alarm. 5 options: [NONE], [3 Minutes], [5 Minutes], [10 Minutes] and [20 Minutes]. [NONE] means no standby timeout alarm. The time to alarm can be selected as desired. The default is 3 minutes.

Click [Standby Timeout] to enter setting menu, and click the option as required. For example, if you set the alarm time to 3 minutes, the system will give a vibration and audio alarm when the transmitter is idle for 3 minutes. You can set the on/off and volume of the sound, and the on/off and level of the vibration in [8.6 Sound] and [8.7 Vibration] in [System Settings].

8.13 Auto Power Off

If the transmitter is powered on for a long time, the transmitter battery may be used up. If the system detects that the transmitter is not used for a long time, it will be automatically shut down.

If no operation is detected within five minutes, the system starts playing no operation sound, Auto Power Off will turn off the transmitter if no receiver is connected .

To toggle Auto Power Off, touch the box to the right of the setting. If there is a check ☑ in the box, indicating that the function is active.

8.14 Stick Calibration

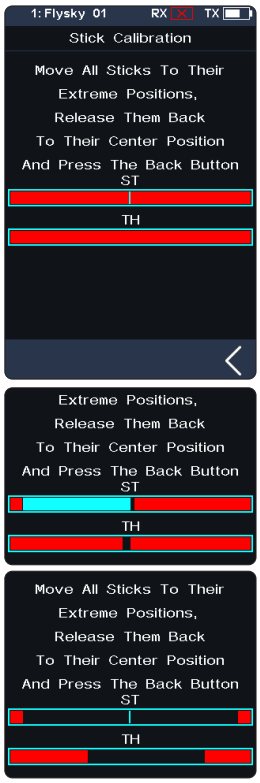

Use this function to correct for the mechanical deviation of the throttle trigger and steering wheel, for example, deviation occurred in the self-centering or maximum/minimum travel.

The blue bar is the channels current position and the calibrated range will be the same color like the background.

Setup:

1. Move the steering wheel and throttle trigger as far as they can go in each direction. Then release them to make them back to netrual position.
2. Touch ◀ to save and return to the previous menu.

8.15 Firmware Update

In case of updating the firmware of the transmitter, use this function to put the transmitter to enter updating mode first, then upgrade the transmitter's firmware.

⚠ WARNING	• **Use the USB Type-C cable shipped with the transmitter.** • **Do not unplug the USB Type-C cable while the firmware is updating.**

This firmware can be updated via the following two ways.

- The firmware of this receiver can be updated through the Flysky Assistant (The firmware of Flysky Assistant is available on the Flysky official website).
- Or update it by following the steps below:
  1. Download and open the newest official software.
  2. Connect a transmitter with a computer by USB Type-C cable.
  3. Touch [Firmware Update], after which "Updating the transmitter firmware may cause model data to be restored to factory default values. Are you sure?" will be displayed. Touch "YES", to enter update mode.
  4. After completing the above steps, click [Update] in the software on your computer to start the update.
  5. The tranmitter will power on again when the updating process is completed. Then remove the USB Type-C and close the firmware.

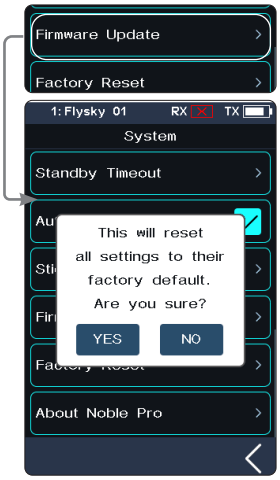

Note: The model data will be reset after the firmware update. Back up the mode data before you perform firmware updating. If the transmitter is not recognized by the official software, there may be a version problem occured.

8.16 Factory Reset

Factory Reset function resets all of the transmitter settings and functions back to their factory default state/data.

Setup:
Touch "Factory Reset", then touch "YES" when prompted.

Note: To avoid errors, do not use this function during operation.

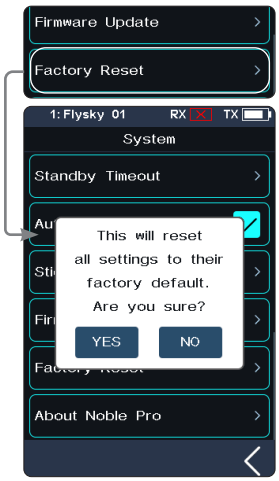

8.17 About Noble NB4 Pro+

This function contains basic information such as product name, firmware version, version date, hardware and RF library version.

微信公众号 Bilibili Website Facebook

9. Transmitter Specifications

This chapter includes specifications for Noble NB4 Pro+ transmitters, FGr8B receiver and FGr4B receiver.

9.1 Transmitter Specifications (Noble NB4 Pro+)

Product model	Noble NB4 Pro+
Adaptive Receivers	FGr8B, FGr4B and other AFHDS 3 receivers
Adaptive Models	Car, Boat, Robot or Ironclad
Number of Channels	2(Extreme-speed)，4，6，8，10，12 or 18 channels
2.4G RF	2402.6-2479.4MHz
Maximum Power	17.84dBm (for EU)
Low Voltage Alarm	＜ 3.65V
Data Output	USB Type-C
Charging Jack	USB Type-C
Antenna Type	External single antenna
Display	3.5-inch 320*480 full dot matrix color IPS touch screen
Resolution	4096
Input Power	1S（3.8V）*4300mAh Lithium Polymer Battery+3450mAh 18650 Battery
Distance	>300m (Ground distance without interference)
Online Update	Yes
Temperature Range	-10° C~+45° C
Humidity Range	20%~95%
Color	Black
Dimensions	142.7*120*232mm
Weight	670g
Frequency Received by the Wireless Charging	108.0-144.8KHz
Power Received by the Wireless Charging	-8.24dBuA/m@10m
Certification	CE，FCC ID: 2A2UNNB4PRO00, MIC, RCM, IC: 25584-NB4PRO00

9.2 Receiver Specifications (FGr4B)

Product Model	FGr4B
PWM Channels	4
RF	2.4GHz ISM
2.4GHz Protocol	AFHDS 3
Adaptive Transmitters	All Transmitters Which Support AFHDS 3 Protocol
Antenna Type	Single Antenna
Input Power	3.5~9V/DC
Data Output	PWM/PPM/i-BUS/S.BUS/i-BUS2
Temperature Range	-10°C ~ +60°C
Humidity Range	20% ~ 95%
Online Update	Yes
Dimensions	17*29*16.6mm
Weight	6.4g
Certifications	CE, FCC ID: N4ZFGR4B000

9.3 Receiver Specifications (FGr8B)

Product Model	FGr8B
PWM Channels	8
RF	2.4GHz ISM
2.4GHz Protocol	AFHDS 3
Adaptive Transmitters	All Transmitters Which Support AFHDS 3 Protocol
Antenna Type	Single Antenna
Input Power	3.5~9V/DC
Data Output	PWM/PPM/i-BUS/S.BUS/i-BUS2
Temperature range	-10°C ~ +60°C
Humidity Range	20% ~ 95%
Online Update	Yes
Dimensions	35*23.3*13.3mm
Weight	9.4g
Certifications	CE, FCC ID: N4ZFGR8B

10. Package Contents

The accessories included are different in different versions, please consult your dealer for details.

11. Instructions

11.1 Brake Pad Replacement and Angle Adjustment

1

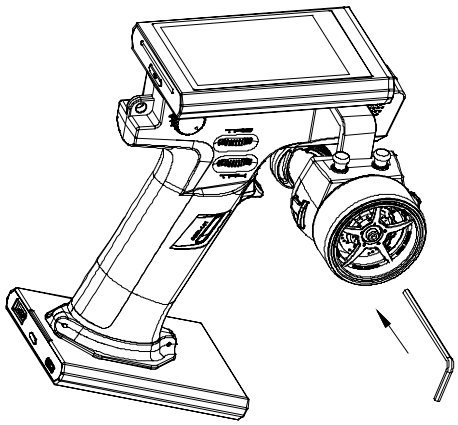

First insert a hexagonal screwdriver into the screw hole used to secure the steering wheel.

2

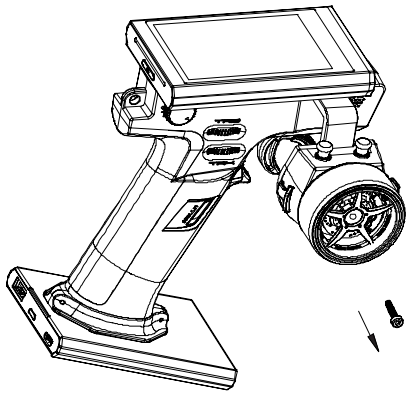

Turn the hexagonal screwdriver counterclockwise until the screw is completely loose and remove it.

3

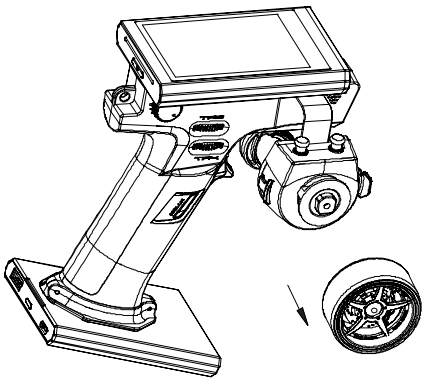

Take out the steering wheel upward.

4

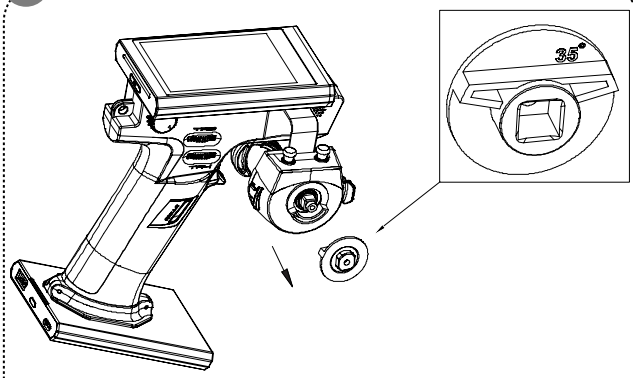

Pinch the brake pad with two fingers and take out upwardly.

5

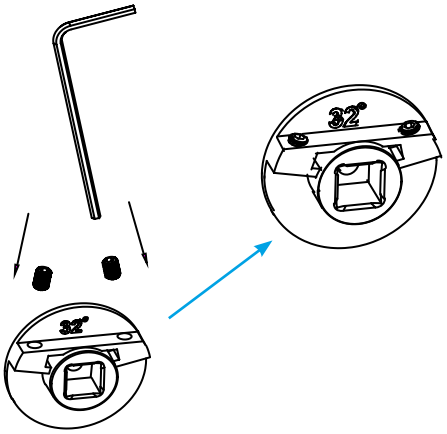

Prepare the brake pad for replacement and two screws. Use a hexagonal screwdriver to fix the screws on both ends of the brake pad in turn.

6

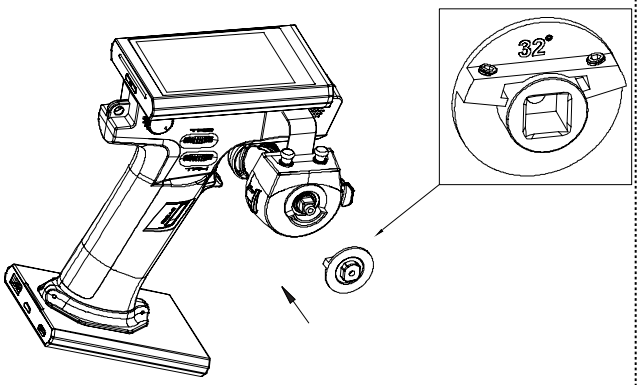

Align the brake pads installed with the screws upwardly and press firmly to secure the brake pad in the slot.

微信公众号 Bilibili Website Facebook

7

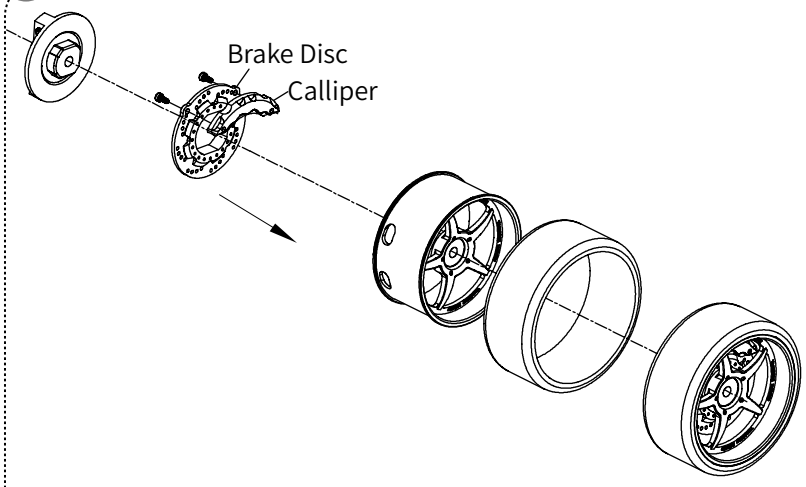

According to the diagram, the caliper is fixed by two screws through the brake disc, and the steering wheel and the steering wheel sponge are set in the direction of the arrow.

8

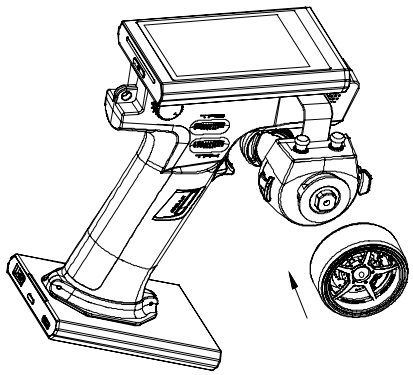

Use the mounting slot of the steeringwheel with brake pad adjustment hole to place over the protruding connector of the brake pad, then press the steering wheel to fix it.

9

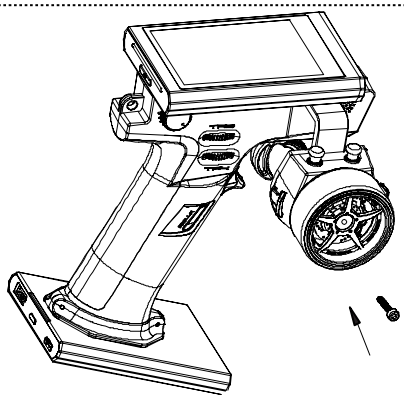

Insert the screw into the screw hole used to secure the steering wheel, then align the hexagonal screwdriver with the hexagonal hole in the head of the screw, hold the side of the steering wheel with one hand and turn the screwdriver clockwise with another hand until the screw is secured.

10

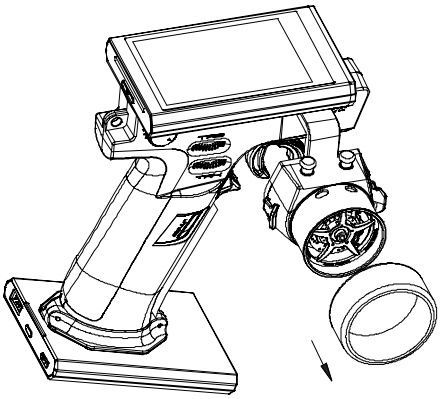

Take the steering wheel sponge after fixing the screws.

11

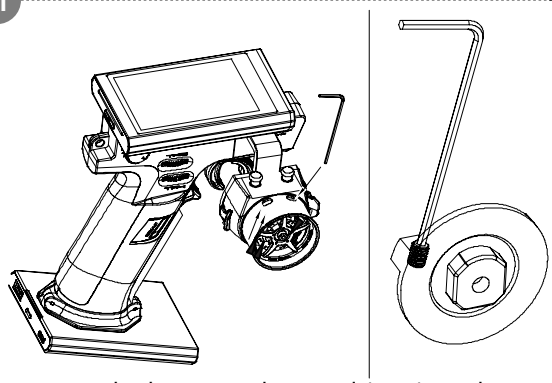

Insert the hexagonal screwdriver into the two adjustment holes at the top of the steering wheel and adjust the rotation angle of the steering wheel as needed.

- The tighter the screw, the smaller the rotation angle. The looser the screw, the larger the rotation angle.

微信公众号 Bilibili Website Facebook

12

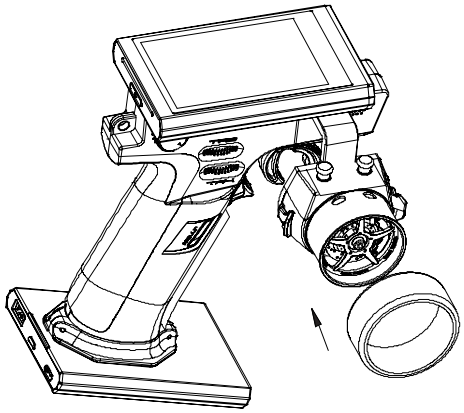

- Reinstall the steering wheel sponge after adjusting the brake pads.

13

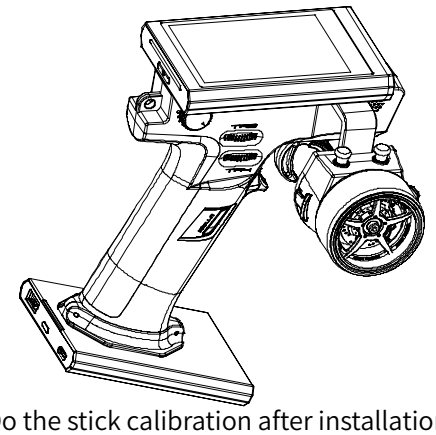

- Do the stick calibration after installation is complete. Then the transmitter can be used normally.

! Pay attention to your strength in the process of replacing the brake pads. Remember not to damage accessories. Please refer to the above steps to replace the brake pads, to ensure that the brake pads can be used normally.

微信公众号 Bilibili Website Facebook

11.2 Removing the Grip

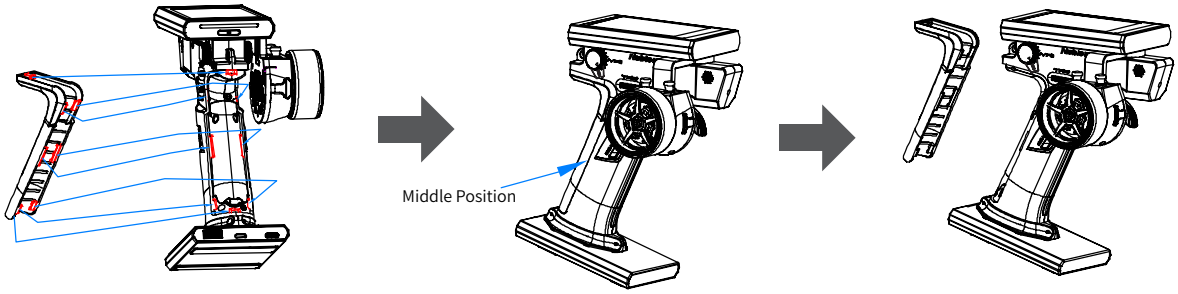

① Check the positions of the 8 clips.

② Unsecure the middle clip of the grip from the middle of the assembly gap, and then remove all the remaining clips from the middle to the periphery.

③ Remove the whole grip naturally.

11.3 Assembling the Grip

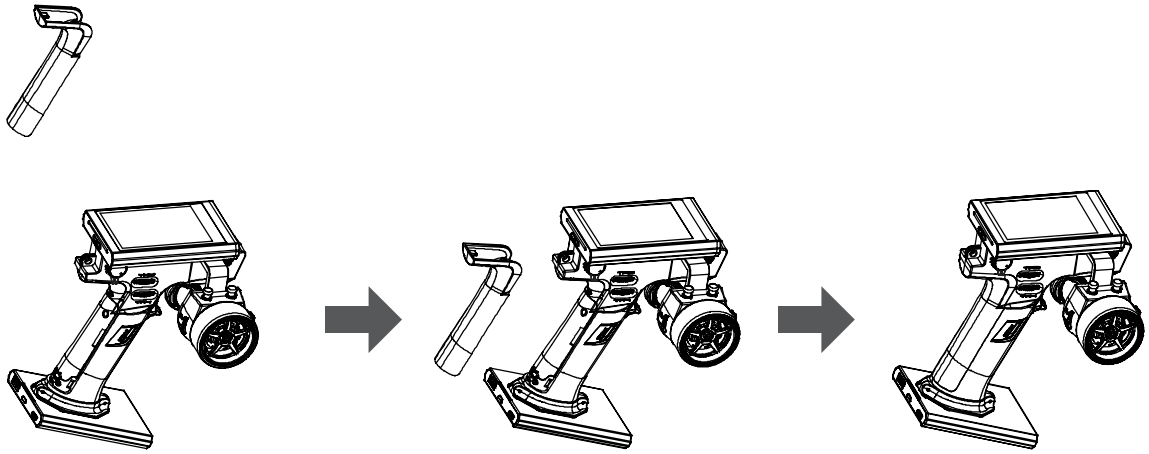

① Align the 8 clips of the grip.

② Put the grip into the handle, use your thumb to press the 8 clip positions. Apply the force increasingly until the grip edge is completely affixed to the plastic parts.

11.4 Charging Function and Precautions

Wired Charging Method

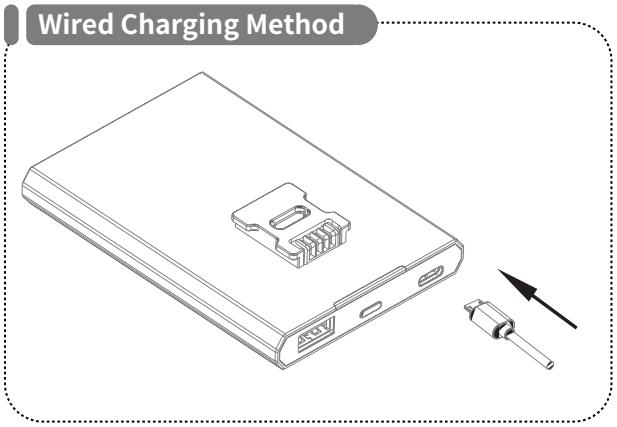

- The transmitter base can be charged directly by connecting the USB Type-C cable.

11.5 Replacing VR1 Knob as a Three-position Switch

1

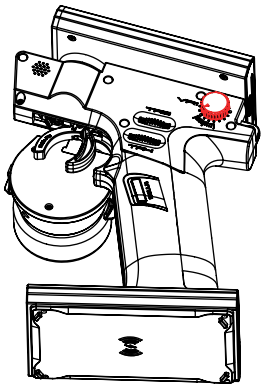

Make sure that the knob needs to be replaced with a three-position switch.

2

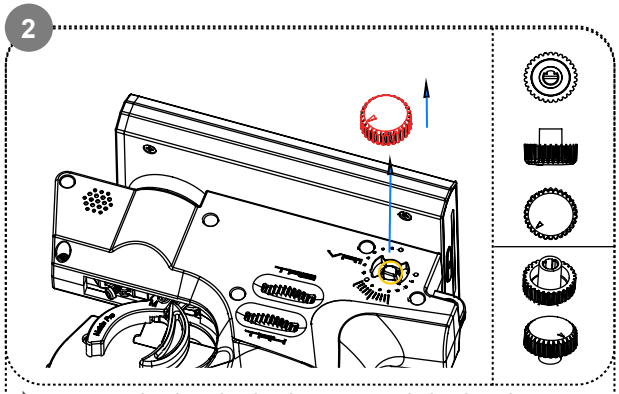

Turn the knob clockwise until the knob is loose. Pinch the knob with the thumb and index finger and then lift it upward to remove the knob.

3

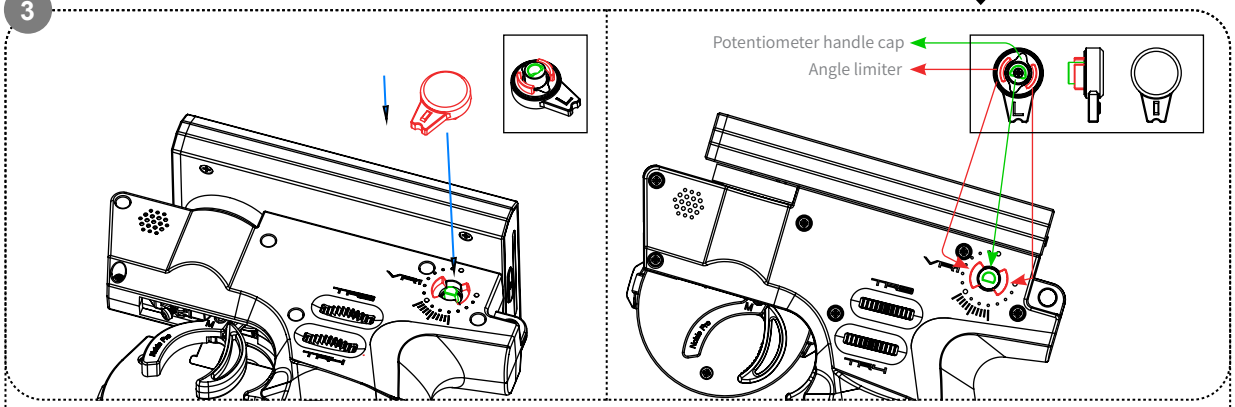

Prepare a three-position switch to be replaced by first aligning the angle limit flap of the three-position switch with the angle limit slot on the transmitter, then align the potentiometer handle cap of the switch with the potentiometer handle of the transmitter. When the angle limit flap and the potentiometer handle cap are aligned at the same time, press the switch firmly by hand.

4

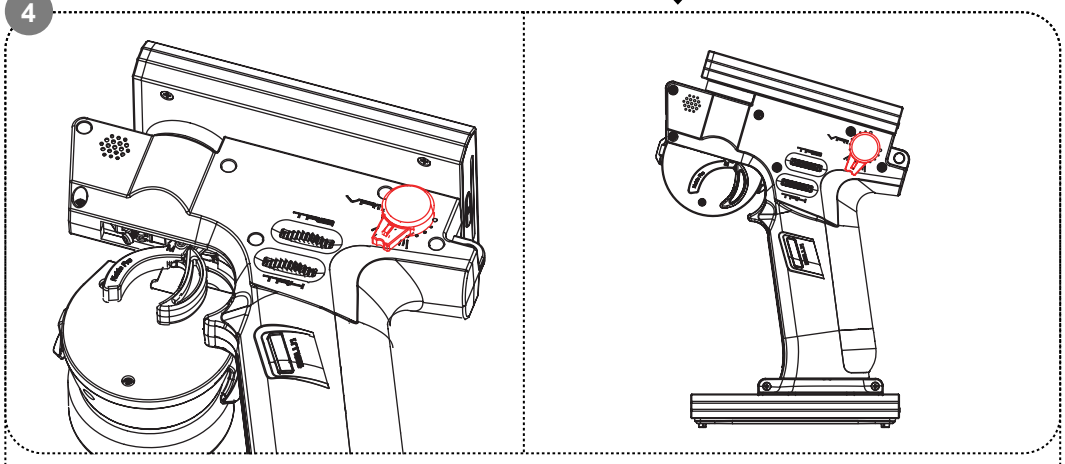

After installation, turn the knob left and right to test if it is installed correctly.

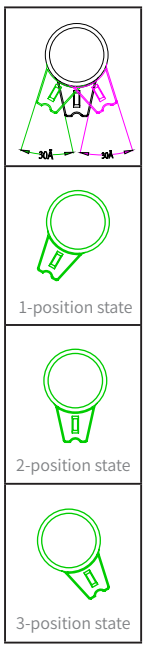

Pay attention to your strength in the process of replacing the three-position switch to avoid damaging accessories.

Please refer to the above steps for installation. Make sure the product can work properly after installation.

微信公众号 Bilibili Website Facebook

11.6 Replacing the 3-position Switch as VR1 Knob

1

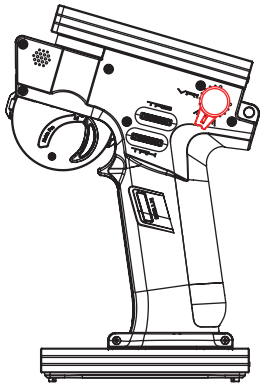

2

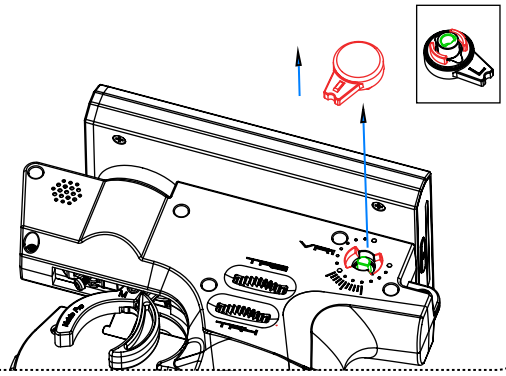

Remove the three-position switch upwardly.

4

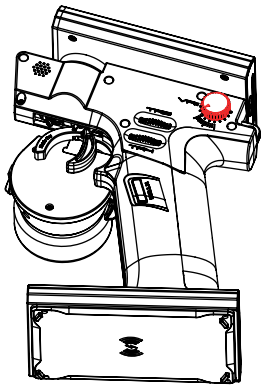

3

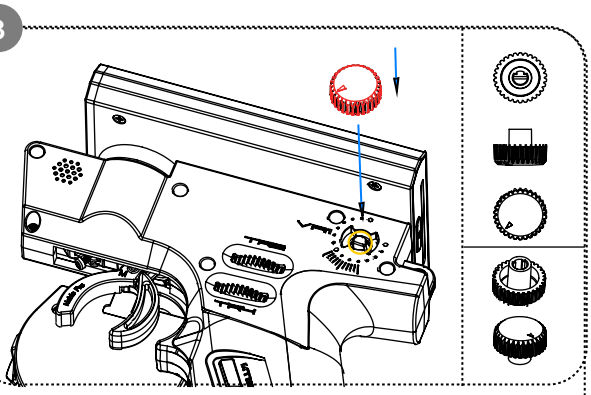

Align the knob with the potentiometer handle cap and press down hard on the knob until the knob is completely fixed.

11.7 Trigger Spring Replacement

1

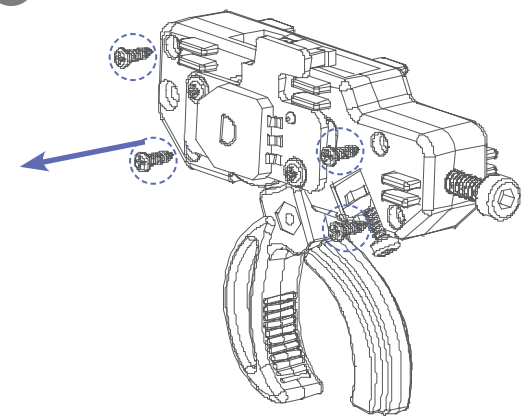

- Remove 4 screws(PWA 2.1*6mm);

2

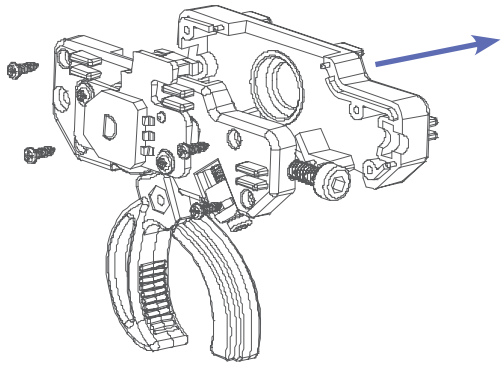

- Remove the upper trigger cover;

3

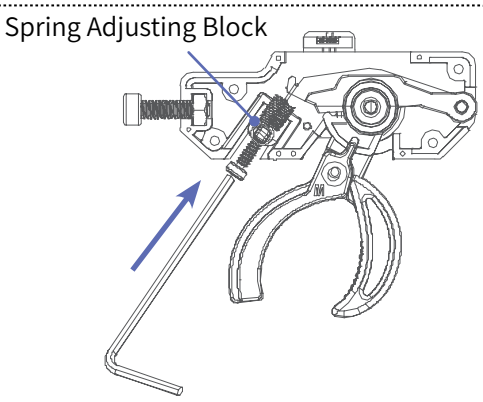

- Adjust the screw(HB2*9mm) with a metric 1.5mm hexagonal screwdriver and adjust the spring adjusting block to the very bottom;

4

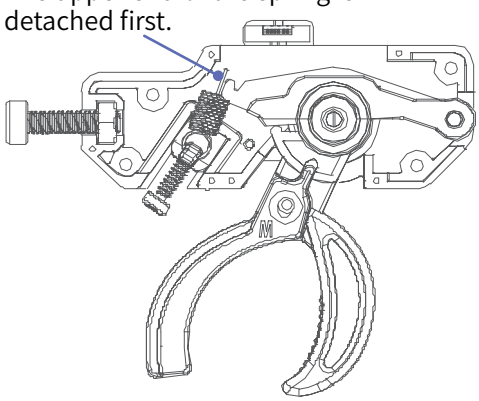

- Lift the upper end of the spring, and finally the spring is removed;

5

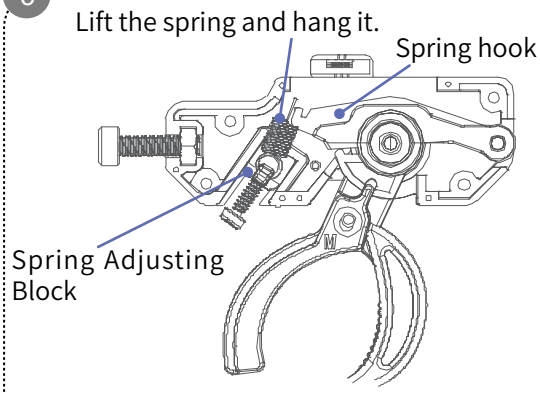

- Hang the lower end of the spring to the spring adjusting block, then lift the spring and hang it;

6

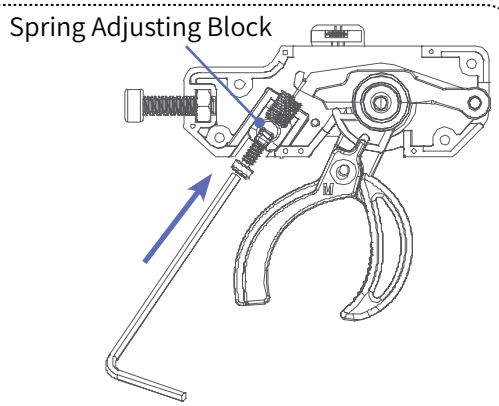

- Adjust the screw(HB2*9mm) with a metric 1.5mm hexagonal screwdriver, and adjust the spring adjusting block to the appropriate position;

7

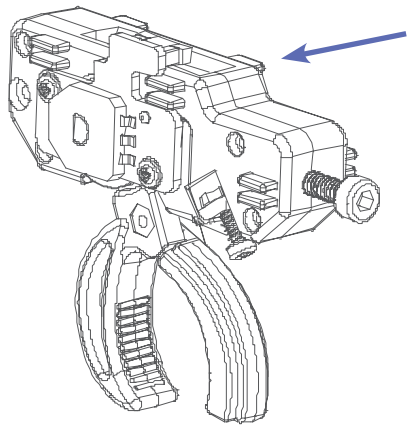

- Install the upper trigger cover;

8

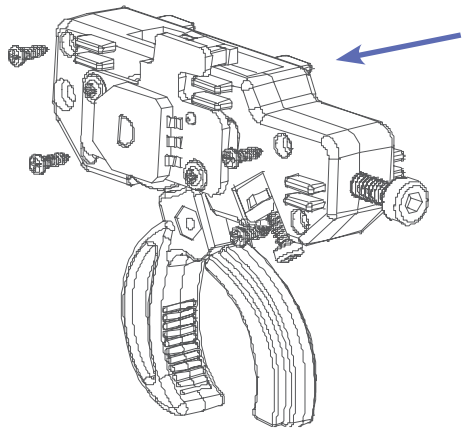

- Lock 4 screws(PWA 2.1*6mm) to secure trigger cover;

9

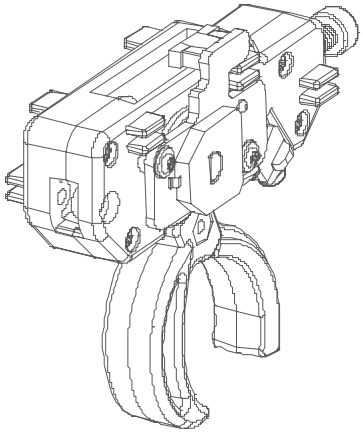

- Complete the trigger spring replacement.

11.8 Steering Wheel Spring Replacement

1

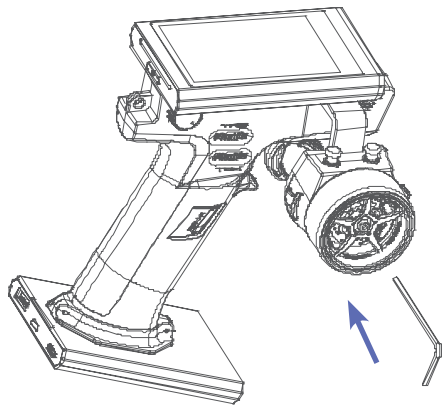

- First insert a metric 2.5mm hexagonal screwdriver into the screw hole used to secure the steering wheel;

2

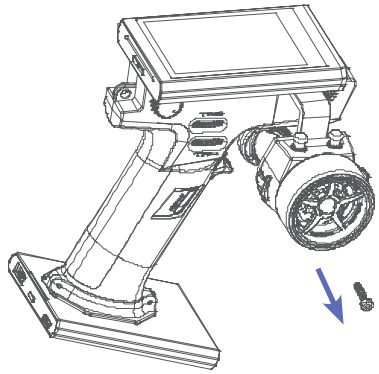

- Turn a metric 2.5mm hexagonal screwdriver counterclockwise until the screw(HM3*12mm) is completely loose and remove it;

微信公众号 Bilibili Website Facebook