# FS-MG6-BS&FS-R6D-BS

USER MANUAL

FLYSKY

## Digital Proportional Radio Control System

2.4GHz 2A-BS

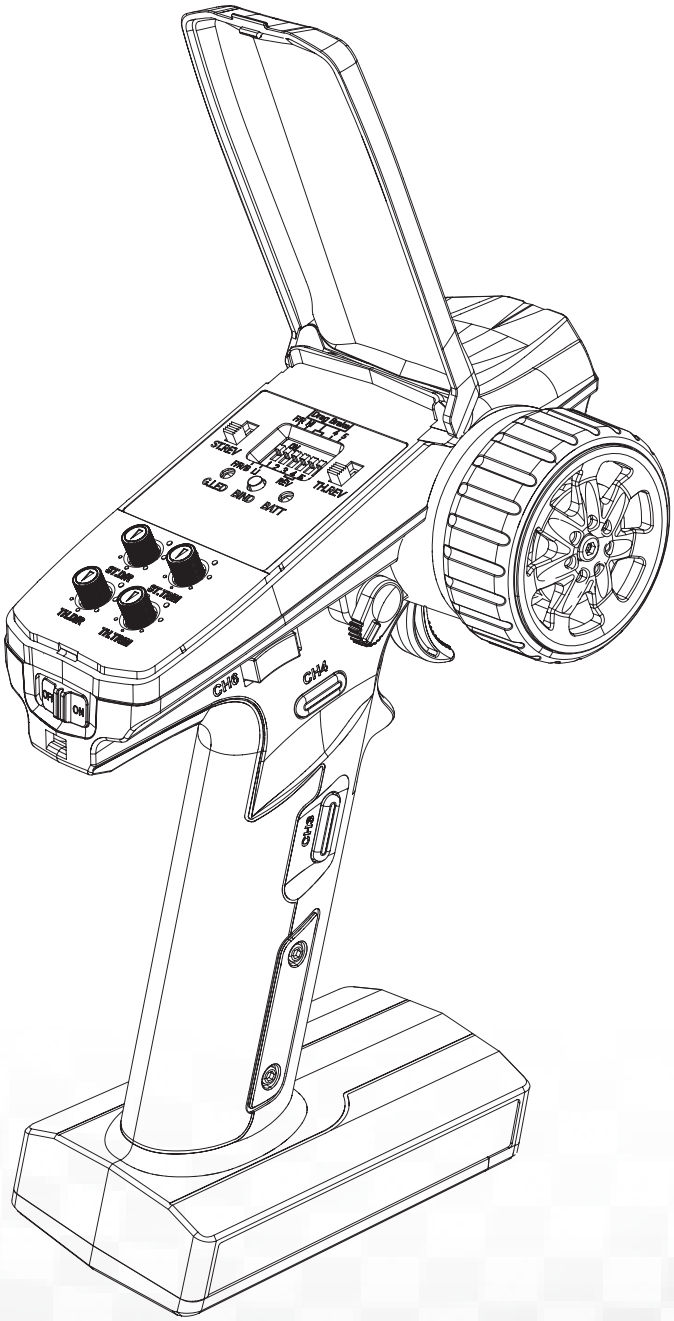


Copyright ©2023 Flysky Technology Co., Ltd.

微信公众号 Bilibili Website Facebook

15+

**WARNING:**

This product is only for 15 years old or above.

Thank you for purchasing our products.

Read the manual carefully to ensure your personal safety as well as the safety of your equipment.

If you encounter any problems during using, please refer to this manual first. If the problem is still not resolved, please contact the local dealer directly or contact the customer service staff via the website below:

**www.flysky-cn.com**

# Contents

**1.Safety ..... 1**
1.1 Safety Symbols ..... 1
1.2 Safety Guide ..... 1
**2.Introduction ..... 2**
2.1 Transmitter Overview ..... 2
2.2 Receiver Overview (FS-R6D-BS) ..... 3
2.2.1 Receiver LED ..... 3
2.2.2 Interface ..... 3
2.2.3 Antenna ..... 3
**3.Getting Started ..... 4**
3.1 Transmitter Antenna ..... 4
3.2 Receiver and Servo Installation ..... 4
3.3 Transmitter Battery Installation ..... 5
**4.Instructions ..... 6**
4.1 Powering ON ..... 6
4.2 LED Indicator ..... 6
4.3 Binding ..... 6
4.4 Stick Calibration ..... 7
4.5 Powering OFF ..... 7
**5.System Functions ..... 8**
5.1 Channel Description ..... 8
5.2 Channel Reverse ..... 8
5.3 Trims ..... 8
5.4 D/R ..... 9
5.5 End Point Adjustment ..... 9
5.6 ESC Parameters Setting ..... 11
5.7 Failsafe ..... 12
5.8 Idle Alarm ..... 12
5.9 Sleep Mode ..... 12
5.10 Low Voltage Alarm ..... 12
5.11 Data Reset ..... 13
**6. FS-R6D-BS Function Instructions ..... 14**
6.1 Attention ..... 14
6.2 Binding Instruction ..... 14
6.3 Car Light Control ..... 14
6.4 Failsafe ..... 15

**7. Product Specifications ..... 16**
7.1 Transmitter Specifications ..... 16
7.2 Receiver Specifications ..... 17
**8. Package Contents ..... 18**
**9. Certifications ..... 19**
9.1 DoC Declaration ..... 19
9.2 CE Warning ..... 19
9.3 FCC Statement ..... 19
9.4 Environmentally friendly disposal ..... 20

# 1.Safety

## 1.1 Safety Symbols

Pay close attention to the following symbols and their meanings. Failure to follow these warnings could cause damage, injury or death.

| | |
|---|---|
| Danger | • **Not following these instructions may lead to serious injuries or death.** |
| Warning | • **Not following these instructions may lead to major injuries.** |
| Caution | • **Not following these instructions may lead to minor injuries.** |

## 1.2 Safety Guide

**Prohibited** | **Mandatory**

- **Do not use the product at night or in bad weather like rain or thunderstorm. It can cause erratic operation or loss of control.**
- **Do not use the product when visibility is limited.**
- **Do not use the product on rain or snow days. Any exposure to moisture (water or snow) may cause erratic operation or loss of control.**
- **Interference may cause loss of control. To ensure the safety of you and others, do not operate in the following places:**
  - Near any site where other radio control activity may occur
  - Near power lines or communication broadcasting antennas
  - Near people or roads
  - On any body of water when passenger boats are present
- **Do not use this product when you are tired, uncomfortable, or under the influence of alcohol or drugs. Doing so may cause serious injury to yourself or others.**
- **The 2.4GHz radio band is limited to line of sight. Always keep your model in sight as a large object can block the RF signal and lead to loss of control.**
- **Do not touch any part of the model that may generate heat during operation, or immediately after use. The engine, motor or speed control, may be very hot and can cause serious burns.**

- **Misuse of this product may lead to serious injury or death. To ensure the safety of you and your equipment, read this manual and follow the instructions.**
- **Make sure the product is properly installed in your model. Failure to do so may result in serious injury.**
- **Make sure to disconnect the receiver battery before turning off the transmitter. Failure to do so may lead to unintended operation and cause an accident.**
- **Ensure that all servos operate in the correct direction. If not, adjust the direction first.**
- **Make sure the model stays within the systems maximum range to prevent loss of control.**

# 2.Introduction

This system adopts 2.4GHz 2A-BS protocol and consists of FS-MG6-BS transmitter and FS-R6D-BS receiver. It supports two-way transmission and outputs six channels. The transmitter is lightweight and compact in design, comfortable and ergonomic, it supports ESC parameters setting and compatible with car models.

## 2.1 Transmitter Overview

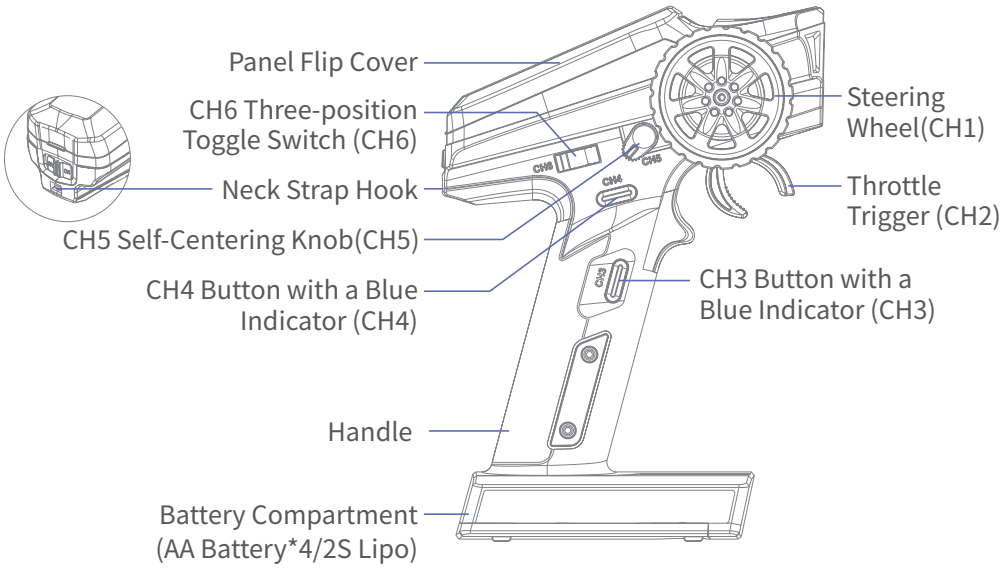


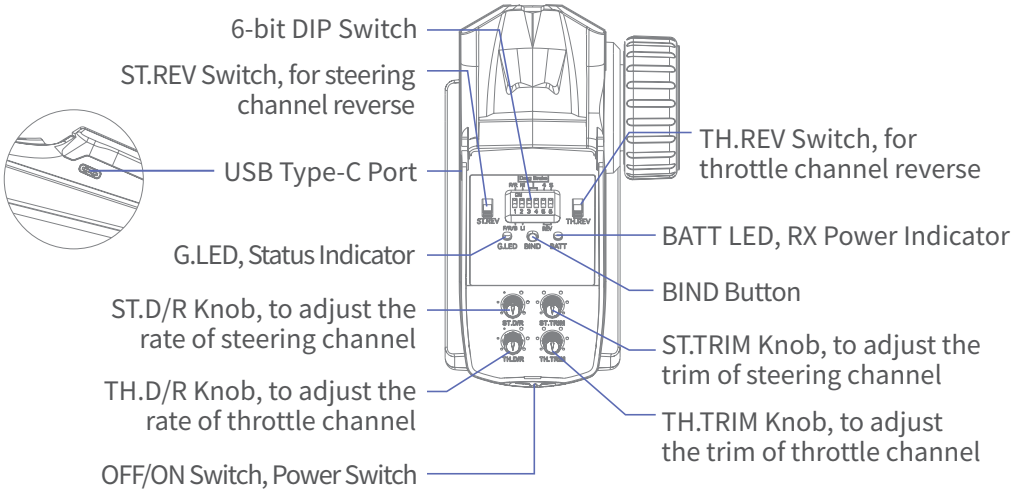




微信公众号 Bilibili Website Facebook

## 2.2 Receiver Overview (FS-R6D-BS)

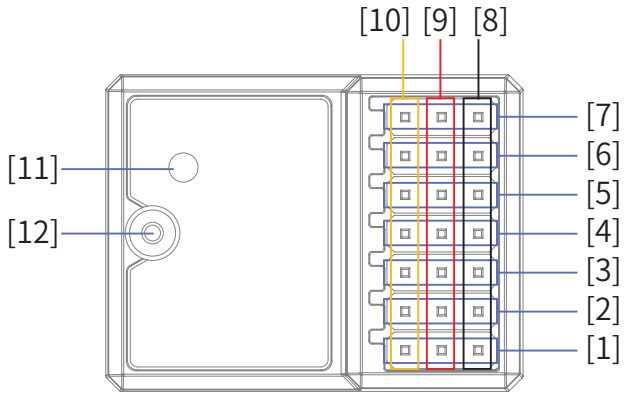


| | | | |
|---|---|---|---|
| [1] | CH1 Interface | [7] | LED Car Light Interface |
| [2] | CH2 Interface | [8] | "-" (CH Interface Cathode) |
| [3] | CH3 Interface | [9] | "+" (CH Interface Anode) |
| [4] | CH4 Interface | [10] | S (CH Interface Signal Pin) |
| [5] | CH5 Interface | [11] | LED |
| [6] | CH6 Interface | [12] | Antenna |

### 2.2.1 Receiver LED

The LED status indicates the power supply state of the receiver and its working state.

Off: The receiver is not powered on.

Solid ON: The receiver works normally.

Fast Flashing: The receiver is in the binding mode.

Slow Flashing: The transmitter bound is powered off, or it has been not bound with a transmitter, or the receiver does not receive any signal.

### 2.2.2 Interface

All channel interfaces are 2.54mm*3 Pin standard pins.

### 2.2.3 Antenna

It is an external antenna.

| | |
|---|---|
| ⚠ Caution | • Do not pull the antenna of the receiver. Do not tie the antenna and the servo cable together. |
| ⚠ Warning | • Do not put the antenna close to the metal materials, because this will affect the signal strength of the receiver. Keep the receiver's antenna at least 1cm away from conductive materials such as carbon or metal. |

# 3.Getting Started

Before operation, install the battery and connect the system as instructed below.

## 3.1 Transmitter Antenna

The transmitter has a built-in antenna. When the transmitter starts to work, the antenna automatically operate, without additional operations.

## 3.2 Receiver and Servo Installation

Make sure that the receiver is mounted in an appropriate location within the model, to ensure a stable signal, maximum range and to mitigate external interference, follow these guidelines:

Pay attention to the following when installing the receiver:

1. Make sure the receiver is not installed near motors or sources of electrical noise.
2. Keep the receiver's antenna away from conductive materials such as carbon or metal. To ensure normal function, make sure there is a gap of at least 1cm between the antenna and the conductive material.

| | |
|---|---|
| ⚠ **Caution** | • **To prevent damage do not power on the receiver during installation.** |

Connect the servos/car light drive board to the receiver according to the digram below.

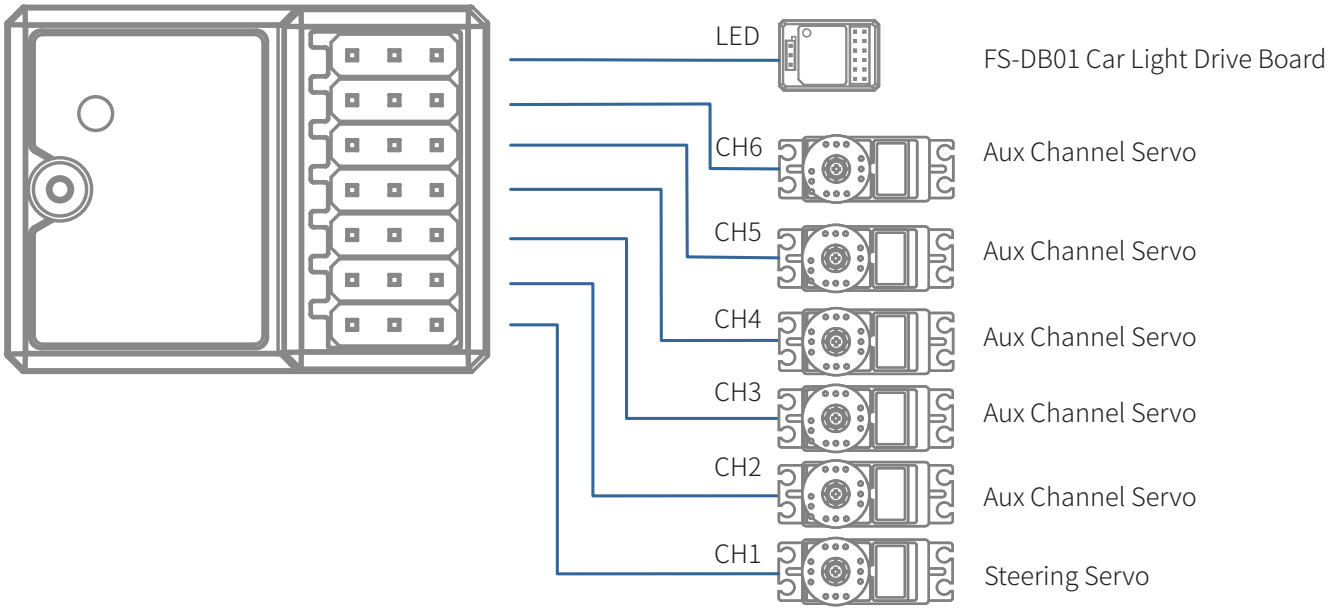


Note: Whether the FS-DB01 car light drive board is included or not in attachments, check the packing list for details due to different configurations.



微信公众号 Bilibili Website Facebook

## 3.3 Transmitter Battery Installation

| | |
|---|---|
| ⚠ Danger | • **Only use specified battery.** |
| ⚠ Danger | • **Do not open, disassemble, or attempt to repair the battery.** |
| ⚠ Danger | • **Do not crush/puncture the battery, or short the external contacts.** |
| ⚠ Danger | • **Do not expose to excessive heat or liquids.** |
| ⚠ Danger | • **Do not drop the battery or expose to strong shocks or vibrations.** |
| ⚠ Danger | • **Always store the battery in a cool, dry place.** |
| ⚠ Danger | • **Do not use the battery if damaged.** |

### Installing the AA Battery

Follow the steps below to install the AA batteries:

1. Open the battery compartment cover as illustrated.
2. Insert 4 fully-charged AA batteries into the compartment. Make sure that the batteries are well set according to the polarities marked on the battery compartment.
3. Replace the battery compartment cover.

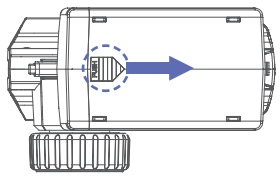

Press and slide the cover as illusrtated. Then remove the cover.

### Installing the LiPo Battery

Follow the steps below to install the LiPo battery:

1. Open the battery compartment cover.
2. Insert 2S LiPo battery into the compartment.
3. Plug the cable of LiPo battery into the JST Jack.
4. Replace the battery compartment cover. Be careful not to pinch the cable.

# 4.Instructions

After setting up, follow the instructions below to operate the system.

## 4.1 Powering ON

Follow the steps below to turn on the transmitter:

1. Check to make sure that the batteries are fully charged and installed correctly.
2. Toggle the Power Switch to the ON position. The G.LED will be solid on.

Note: For safety, always power on the transmitter before the receiver.

| | |
|---|---|
| ⚠ **Warning** | • **Operate with caution in order to avoid damage or injury.** |

## 4.2 LED Indicator

The G.LED of the transmitter is used to indicate the functional status of the transmitter; the BATT LED is used to indicate the power status of the transmitter, the details are as follows.

1. G.LED: The green status indicator
   - When the transmitter is in binding state, the G.LED will flash rapidly.
   - When the transmitter voltage is low, the G.LED will flash slowly.
   - When the transmitter is in idle alarm/sleep mode, the G.LED will be in gradual light state.
   - When the transmitter is in end point adjustment status, the G.LED will work in two-flash-one-off state.
2. BATT Indicator: The battery power indicator for the transmitter
   - When the battery power is high, the BATT LED will be solid on in green.
   - When the battery power is medium, the BATT LED will be solid on in yellow.
   - When the battery power is low, the BATT LED will be solid on in red.
   - When the battery power is ultra low, the BATT LED will flash slowly in red.

Note: In three seconds after the power-on of the transmitter, the BATT LED indicates the transmitter battery power status. When the transmitter is powered on for 3 seconds, the receiver battery power status is indicated.

- When the transmitter does not receive the return message, the BATT LED will be off.
- When the receiver is de-bound, the BATT LED will maintain in the state when the receiver is de-binding.

## 4.3 Binding

The transmitter and the receiver have been pre-bound before delivery. If you are going to use another receiver, follow the steps below to rebind. The transmitter supports two-way binding, the steps are as following:

1. Turn on the transmitter while holding the BIND button, then the transmitter will enter the binding mode. At this time, the G.LED will flash quickly. Once in bind mode release the BIND button.
2. Turn on the receiver, and it will wait for 1 second for connection. If without connection, the receiver will enter the binding mode automatically. At this time, the receiver LED will be flashing fast.

3. Once the binding is successful, the receiver LED and the G.LED of the transmitter will be solid on.
4. Verify that the transmitter and the receiver are working properly. If you need to re-bind, repeat the above steps.

## 4.4 Stick Calibration

Use this function to correct for the mechanical deviation of the throttle trigger, steering wheel and CH5 self-centering knob, for example, deviation occurred in the self-centering or maximum minimum travel, the steps are as following:

1. Turn and hold the steering wheel clockwise to the max travel and push the throttle trigger forwards as far as possible, and at the same time turn on the transmitter, the transmitter will be in calibration mode, meanwhile, the buzzer will sound three times cyclically for prompt.
2. Steering Wheel Calibration: Turn the steering wheel to the max and min travel clockwise/counterclockwise respectively, and the buzzer will sound twice cyclically for prompt.
3. Throttle Trigger Calibration: Push/pull the throttle trigger to forward/backward as far as it will go, and the buzzer will sound once cyclically for prompt.
4. CH5 self-centering Knob Calibration: Turn the CH5 self-centering knob to its max and min travel clockwise/counterclockwise respectively, and the buzzer will give a long beep.
5. Press the BIND button to save and exit in case of the calibration is successful, and the buzzer will give a long beep.

   If the calibration fails, pressing the BIND button is invalid. Repeat the steps above.

## 4.5 Powering OFF

Follow the steps below to turn off the system:

1. Turn off the receiver first.
2. Toggle the transmitter's power switch to the [OFF] position.

| | |
|---|---|
| ⚠ **Danger** | • **Make sure to disconnect the receiver power before turning off the transmitter. Failure to do so may lead to damage or serious injury.** |

# 5.System Functions

This section focuses on the functions and how to use them.

## 5.1 Channel Description

The transmitter outputs a total of 6 channels, which are assigned as below, as well as the functions.

| Channel | Assigned Control | Function |
|---|---|---|
| CH1 | Steering Wheel | Steering, to make the model car to turn right or left.<br>Turn the steering wheel in clockwise or counterclockwise direction to control the left/right steering. |
| CH2 | Throttle Trigger | Throttle, to control the model car to move forward, reverse or brake.<br>Push or pull the throttle trigger to control the model car forward, brake or backward. |
| CH3 | CH3 Button | It controls car lights. (To switch the state of car lights. There are three states in total, these three states can be switched in turn cyclically.) |
| CH4 | CH4 Button | User can customize the channel function. For example, function as a fast / slow-position servo channel. |
| CH5 | CH5 Self-Centering Knob | |
| CH6 | CH6 Three-position Toggle Switch | |

## 5.2 Channel Reverse

This function reverses the motion direction of steering channel, throttle channel, CH4 and CH5 servos.

The ST.REV and TH.REV switches are reverse setting switches of steering channel and throttle channel respectively. Switches 5 and 6 of the 6-bit DIP switch are the reverse setting switches of CH4, and CH5, respectively. A switch on the upper side indicates that the servo output is normal; a switch on the lower side indicates that the servo output is reverse.

Setup:

Toggle the corresponding setting switch to the upper side, the buzzer will have one beep. Toggle the switch to the lower side, the buzzer will have two beeps.

## 5.3 Trims

This function can set the trim of steering channel and throttle channel.

The ST.TRIM and TH.TRIM knobs correspond to the trim adjustments of the steering channel and throttle channel respectively. When the knob is centered by default, the trim value is zero. When adjusting counterclockwise, the

trim value increases to a maximum of 120us. When adjusting clockwise, the trim value decreases to a minimum of -120us. Note that when the channel is set in reverse, the trim is reversed at the same time, that is, the trim value decreases in the counterclockwise adjustment, and the trim value increases in clockwise adjustment.

Setup:

Turn the trim knobs corresponding to the channel clockwise or counterclockwise for trim adjustment. The buzzer will have one beep when the position is reached to the center.

## 5.4 D/R

This function is used to adjust the rate of steering channel and throttle channel, so that the servo actions tend to be sensitive.

ST.D/R is used to adjust the steering channel rate. TH.D/R is used to adjust the throttle channel rate. Turning the knob anticlockwise will increase the value. Turning the knob clockwise will decrease the value. Smaller values indicate finer adjustment. The range is 0 ~100%.

Setup:

Turn the D/R knobs corresponding to the channel clockwise or counterclockwise for D/R adjustment. The buzzer will have one beep when the position is reached to the center.

## 5.5 End Point Adjustment

This function is used to adjust the end points of all channels.

By default, it is used to set the steering channel end points. The end points setting of the others can be triggered by operating the control corresponding to this channel.

### Steering Channel End Point Adjustment

Adjust the end points of steering channel (the control of steering channel is steering wheel).

Setup:

1. In the power-on state, press BIND twice, then the transmitter enters the end point setting mode. At this time, G.LED will work in two-flash-one-off mode repeatedly, and the buzzer will prompt with beeping twice cyclically.
2. Rotate the steering wheel to the appropriate travel point and hold it. Press BIND. The buzzer will prompt with beeping once cyclically.
3. Take the center of the steering wheel as the reference, reverse the rotation of the steering wheel to the appropriate travel point and hold it. Press BIND. The buzzer will be turned off at this time.
4. Press BIND for one second to save the setting and exit the end point setting mode. The buzzer will give a long beep, and the G.LED will be solid on. The end points setting of the steering channel is finished.

### CH6 End Point Adjustment

Adjust the end points of CH6 (the control of CH6 is CH6 Three-position Toggle Switch).

Setup:

1. In the power-on state, press BIND twice, then the transmitter enters the end point setting mode. At this time, G.LED will work in two-flash-one-off mode repeatedly, and the buzzer will prompt with beeping twice cyclically.
2. Toggle CH6 Three-position Toggle Switch to one position. The buzzer will prompt with beeping three times cyclically.
3. Rotate the steering wheel to the appropriate travel point and hold it. Press BIND. The buzzer will prompt with beeping twice cyclically. The setting of this position is completed.
4. Toggle CH6 Three-position Toggle Switch to another position. Rotate the steering wheel to the appropriate travel point and hold it. Press BIND. The buzzer will prompt with beeping once cyclically. The setting of this position is finished.
5. Toggle CH6 Three-position Toggle Switch to the last position. Rotate the steering wheel to the appropriate travel point and hold it. Press BIND. The buzzer will be off at this time. The setting of this position is finished.
6. Press BIND for one second to save the setting and exit the end point setting mode. The buzzer will give a long beep, and the G.LED will be solid on. The end points setting of CH6 is finished.

Note: The end point values of at least two positions should be set.

### Other Channels End Point Adjustment

Adjust the end points of the other channels.

Setup:

1. Refer to previous content, to put the transmitter into the end point setting mode.
2. Operate the control corresponding to the channel which you want to set.
3. Rotate the steering wheel to the appropriate travel point and hold it. Press BIND. The buzzer will prompt with beeping once cyclically.
4. Rotate the steering wheel to the appropriate travel point and hold it. Press BIND. The buzzer will be off at this time.
5. Press BIND for one second to save the setting and exit the end point setting mode. The buzzer will give a long beep. and the G.LED will be solid on. The end points setting of this channel is finished.

Notes:

1. If there is no response from the transmitter when a control is operated during the setup process, it means that the setup fails. In this case, you need to set it again.
2. Except the steering channel and throttle channel, you can operate the corresponding control to trigger the end points settings of other channels after completing the settings of one channel. For example, in the end points setting of CH3, you can press the CH4 button after the buzzer is turned off. At this time, the buzzer prompts with beeping twice cyclically. You can continue the end points setting of CH4. If you want to set the end points of the steering channel or throttle channel after setting other channels, the transmitter needs to re-enter the end point setting mode.
3. Throttle channel will maintain normal output during the end point setting of other channels.

## 5.6 ESC Parameters Setting

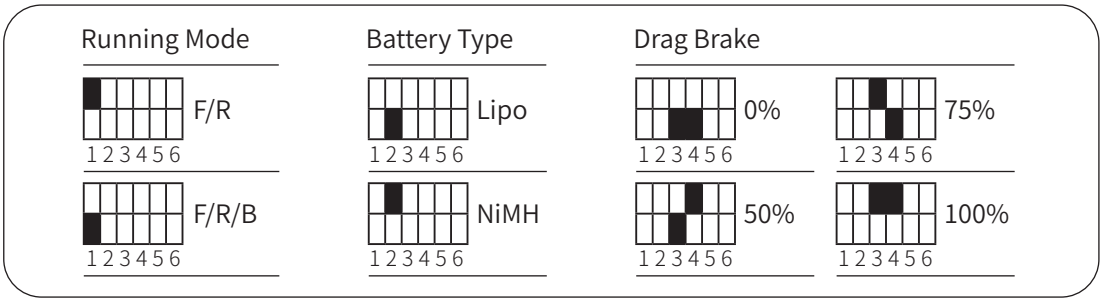


6-bit DIP Switch Sign

This function is suitable for 2-in-1 receivers. The ESC parameters can be set by the 6-bit DIP Switch of the transmitter, that is, the DIP switch is located at different positions and the corresponding parameter values are different. There are three parameters can be set for the ESC, which are "Running Mode", "Battery Type" and "Drag Brake".

### Running Mode

Forward/Reverse/Brake(F/B/R): This mode adopts "double click" reverse mode, that is, when the throttle trigger is pushed from neutral range to the reverse area for the first time, the motor is only braking and will not reverse; when the throttle trigger is moved back to the neutral range and pushed to the reverse area for the second time, it will reverse. This mode is applicable to general models.

Forward/Reverse(F/R): This mode adopts "one click" reverse mode, that is, when the throttle trigger is pushed from neutral range to the reverse area, the motor immediately generates reverse action, which is generally applied to rock crawler.

The switch marked 1 of the 6-bit DIP switch is used to set the ESC running mode. The switch on the upper side indicates that the running mode is Forward/Reverse; and the switch on the lower side indicates that the running mode is Forward/Reverse/Brake.

Setup:

Toggle the switch 1 to the upper side, the buzzer will have one beep. Toggle the switch to the lower side, the buzzer will have two beeps.

### Battery Type

There are LiPo and NiMH cells.  It can be set according to the actual use.

The switch 2 of the 6-bit DIP switch is used to set the battery type. The switch on the upper side indicates that the battery type is NiMH cells; and the switch on the lower side indicates that the battery type is LiPo.

Setup:

Toggle the switch 2 to the upper side, the buzzer will have one beep. Toggle the switch to the lower side, the buzzer will have two beeps.

### Drag Brake

The drag brake means that when the throttle trigger moves from the forward or reverse area to neutral range, it will produce certain braking force to the motor, the larger the value is, the greater the drag brake force is. And this is applicable to decelerate into a turn and model crawler applications. Select proper braking force according to the actual situation.

The switches 3 and 4 of the 6-bit DIP switch are used to set the ESC drag brake force. The drag brake force can be set to 0%, 50%, 75% or 100%.

Setup:

- Toggle both the switch 3 and 4 to the lower side, then the drag brake force is set to 0%.
- Toggle the switch 3 to the lower side and switch 4 to the upper side, then the drag brake force is set to 50%.
- Toggle the switch 3 to the upper side and switch 4 to the lower side, then the drag brake force is set to 75%.
- Toggle both the switch 3 and 4 to the upper side, then the drag brake force is set to 100%.

## 5.7 Failsafe

The failsafe function is used to protect the model and personnel when the receiver is out-of-control.

By default, it is not set, and the PWM interfaces will maintain the last output in case of out-of-control.

- Whether the receiver is set at the transmitting end or not, the CH2 channel throttle has no output signal when the failsafe function is triggered.
- For the other channels, the interfaces will maintain the last output in case of out-of-control. It can be set at the transmitter side. The setting steps are as following:

  In the normal power-on state, set the control corresponding to the channel to be configured with failsafe to the preset position, meanwhile, press and hold the BIND button for 3 seconds to set the output value as the failsafe value. And the buzzer will give a long beep indicating that the setting is successful.

Note: Restore to the default setting in case of re-binding.

## 5.8 Idle Alarm

The transmitter will go into idle alarm state when there is no operation over 10 minutes.

When the transmitter is in idle alarm state, the G.LED will be in gradual light state, and the buzzer will prompt with beeping three times cyclically. Operate any of transmitter controls to exit the idle alarm state.

## 5.9 Sleep Mode

When the transmitter has been in idle alarm state over 2 minutes, it will enter the sleep mode.

In this mode, the G.LED will be in gradual light status, other indicator will be off, and the buzzer and RF will turn off.

To exit the sleep mode, power off the transmitter and restart it.

## 5.10 Low Voltage Alarm

When the system detects a low voltage, it will give an alarm. Avoid accidents caused by long-term operation under low voltage.

When the voltage is detected below 4.2V/7.0V (AA battery/LiPo battery), there is an alarm due to low voltage. At this time, the G.LED will flash slowly, and the buzzer prompts with beeping once cyclically.

When the voltage is detected below 3.5V (ultra-low), the transmitting function is disabled. The G.LED will be in gradual light state.

## 5.11 Data Reset

This function is used to restore the end point value set to the default value.

Setup:

To restore to the default value, press the BIND and CH4 buttons of the transmitter at the same time, and power the transmitter on. At this time, the buzzer will give a long beep.

Note: This function is only applicable to resetting the end point value set to the default value.

# 6. FS-R6D-BS Function Instructions

This chapter mainly introduces the precautions for using the FS-R6D-BS receiver and the settings of the related function.

## 6.1 Attention

- Make sure the product is installed and calibrated correctly, failure to do so may result in serious injury.
- Please carefully check each power device and car frame instructions to ensure the power matching is reasonable before use. Avoid damaging power system due to incorrect matching.
- Do not let the external temperature of the system exceed 90°C /194 °F , because high temperature will damage the power system.
- Make sure the receiver's battery is disconnected before turning off the transmitter, failure to do so can result out of control. Unreasonable setting of the Failsafe may cause accidents.
- Make sure the receiver is mounted away from motors or any device that emits excessive electrical noise.
- Keep the receiver's antenna at least 1cm away from conductive materials such as carbon or metal.
- Do not power on the receiver during the setup process to prevent loss of control.

## 6.2 Binding Instruction

If it needs to rebind the receiver and the transmitter, refer to 4.3 Binding for details.

## 6.3 Car Light Control

This receiver features 6 sets of lights: left turn signal light, right turn signal light, daytime running light, headlight, brake light and reverse light. And these 6 sets of lights are connected to this receiver through the FS-DB01 car light driver board.

The state of all the car lights is controlled by the corresponding controls of the FS-MG6-BS transmitter. The left and right turn signal lights are controlled by steering wheel. The daytime running lights and headlights are controlled by CH3 button. The brake and reverse lights are controlled by throttle trigger. Details are as follows:

| Car Light | Car Light State | State | Control | Trigger Condition | Notes |
|---|---|---|---|---|---|
| Left Turn Signal Light | Slow Flash | Turn Left | Steering Wheel | Turn the sterring wheel counterclockwise. | If you set the steering channel in reverse, the trigger condition for left and right turn signal lights will not be affected. |
| Right Turn Signal Light | Slow Flash | Turn Right | Steering Wheel | Turn the sterring wheel clockwise. | |
| Daytime Running Light and Headlight | OFF | / | CH3 Button | Press the CH3 button | Press the CH3 button to turn on the daytime running lights; then press the CH3 button to turn on the headlights; press the CH3 button again the daytime running lights and headlights turn off at the same time.<br>The state of daytime running lights and headlights will change in cycle as description above accordingly by operating the CH3 button. |
| | Solid ON | | | | |
| Brake Light | Solid ON | Brake | Throttle Trigger | Push the throttle trigger forward. | / |
| Reverse Light | Solid ON | Back up | Throttle Trigger | Push the throttle trigger forward. | / |

Notes:

1. After the receiver is turned on, all the lights will be on for one second and then go out.
2. The steering CH1 channel and throttle CH2 channel are capable of automatic neutral identifying, after the trim is adjusted, the receiver should be powered again to recognize the neutral positions of these two channels automatically.

## 6.4 Failsafe

The receiver supports the failsafe function, it needs to be set at the transmittter side, refer to 5.7 Failsafe for details.

# 7. Product Specifications

This section contains the specifications of FS-MG6-BS transmitter and FS-R6D-BS receiver.

## 7.1 Transmitter Specifications

| | |
|---|---|
| Product Model | FS-MG6-BS |
| Compatible Receivers | FS-R6D-BS |
| Number of Channels | 6 |
| Compatible Models | Simulation Crawler |
| RF | 2.4GHz ISM |
| Maximum Power | <20dBm (e.i.r.p.) (EU) |
| 2.4GHz Protocol | 2A-BS |
| Distance | ⩾ 150m(Ground Distance without Interference) |
| Resolution | 4096 |
| Input Power | 1.5AA*4 or 2S LiPo |
| Working Current | About 60mA/6V |
| Charging Jack | None (The USB Type-C port is only used for power supply.) |
| Low Voltage Alarm | AA battery: <4.2V; LiPo battery: <7.0V |
| Antenna | Single Built-in Antenna |
| Data Output | None |
| Online Update | None |
| Temperature Range | -10°C ~ +60°C |
| Humidity Range | 20% ~ 95% |
| Color | Black |
| Dimensions | 140*187*85mm |
| Weight | 217g |
| Certifications | CE, FCC ID：2A2UNMG1100 |

## 7.2 Receiver Specifications

| | |
|---|---|
| Product Name | FS-R6D-BS |
| Compatible Transmitters | FS-MG6-BS |
| Compatible Models | 1 /8 crawler, on-road car, off-road short course truck, and truck |
| Number of Channels | 6 |
| Number of Car Light Interfaces | 6 (LED car light interface connects to the FS-DB01 car light drive board.) |
| RF | 2.4GHz ISM |
| Maximum Power | < 20dBm (e.i.r.p.) （EU） |
| 2.4G Protocol | 2A-BS |
| Distance | ⩾ 150m(Ground Distance without Interference) |
| Resolution | 4096 |
| Input Power | 3.5 ~ 8.4V/DC |
| Antenna | Single External Antenna(Coaxial Antenna) |
| Data Output | PWM |
| Online Update | None |
| Temperature Range | -10°C ~ +60°C |
| Humidity Range | 20% ~ 95% |
| WaterProof | PPX4 |
| Dimensions | 29*22*16 .2mm |
| Weight | 7.7g |
| Certifications | CE, FCC ID：2A2UNR6D01 |

## 8. Package Contents

This section contains FS-MG6-BS transmitter packing contents.

| Number | Name | Quantity |
|---|---|---|
| 1 | FS-MG6-BS Transmitter | 1 |
| 2 | FS-R6D-BS Receiver | 1 |

# 9. Certifications

## 9.1 DoC Declaration

Hereby, [Flysky Technology Co., Ltd.] declares that the Radio Equipment [FS-MG6-BS&FS-R6D-BS] is in compliance with RED 2014/53/EU.

The full text of the EU DoC is available at the following internet address: www.flyskytech.com/info_detail/10.html

## 9.2 CE Warning

The antenna(s) used for this transmitter must be installed to provide a separation distance of at least 20 cm from all persons and must not be co-located or operating in conjunction with any other transmitter. End-users and installers must be provided with antenna installation instructions and transmitter operating conditions for satisfying RF exposure compliance.

## 9.3 FCC Statement

This equipment has been tested and found to comply with the limits for a Class B digital device pursuant to part 15 of the FCC rules. These limits are designed to provide reasonable protection against harmful interference in a residential installation. This equipment generates, uses and can radiate radio frequency energy and, if not installed and used in accordance with the instructions, may cause harmful interference to radio communications. However, there is no guarantee that interference will not occur in a particular installation. If this equipment does cause harmful interference to radio or televison reception, which can be determined by turning the equipment off and on, the user is encouraged to try to correct the interference by one or more of the following measures:

-- Reorient or relocate the receiving antenna.

-- Increase the separation between the equipment and receiver.

-- Connect the equipment into an outlet on a circuit different from that to which the receiver is connected.

-- Consult the dealer or an experienced radio/TV technician for help.

To assure continued compliance, any changes or modifications not expressly approved by the party responsible for compliance could void the user's authority to operate this equipment.

This equipment complies with Part 15 of the FCC Rules. Operation is subject to the following two conditions:

(1) This device may not cause harmful interference.

(2) This device must accept any interference received, including interference that may cause undesired operation.

Caution!

The manufacturer is not responsible for any radio or TV interference caused by unauthorized modifications to this equipment. Such modifications could void the user authority to operate the equipment.

1. The antenna(s) used for this transmitter must be installed to provide a separation distance of at least 20 cm from all persons and must not be co-lacated or operating in conjunction with any other transmitter.End-users and installers must be provided with antenna installation instructions and transmitter operating conditions for satisfying RF exposure compliance.
2. Move all your channels to the desired position.
3. Select [All channels] and then [Yes] in the confirmation box.

## 9.4 Environmentally friendly disposal

Old electrical appliances must not be disposed of together with the residual waste, but have to be disposed of separately. The disposal at the communal collecting point via private persons is for free. The owner of old appliances is responsible to bring the appliances to these collecting points or to similar collection points. With this little personal effort, you contribute to recycle valuable raw materials and the treatment of toxic substances.

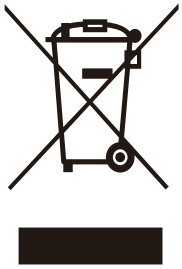

**CAUTION**

RISK OF EXPLOSION IF BATTERY IS REPLACED BY AN INCORRECT TYPE.
DISPOSE OF USED BATTERIES ACCORDING TO THE INSTRUCTIONS

*Figures and illustrations in this manual are provided for reference only and may differ from actual product appearance. Product design and specificatiions may be changed without notice.*



微信公众号 Bilibili Website Facebook

# FLYSKY

微信公众号 Bilibili Website Facebook

**www.flysky-cn.com**

Copyright ©2023 Flysky Technology Co., Ltd.

Release date: 2023-12-08

FCC ID：2A2UNMG1100

Manufacturer: ShenZhen FLYSKY Technology Co., Ltd.
Address: 16F, Huafeng Building, No. 6006 Shennan Road, Futian District, Shenzhen, Guangdong, China