FCC Test Report

Report No: FCS202608123W02

Issued for

Applicant:	JETION INTERNATIONAL LIMITED
Address:	ROOM 413, NO. 3 DAGUAN ZHONG ROAD,TIANHE DISTRICT, GUANGZHOU, GUANGDONG,CHINA
Product Name:	Wireless Mouse
Brand Name:	N/A
Model Name:	PJT-DCB2050
Series Model:	347593,PCMS001,PCMS002,PCMS003,PCMS004, PCMS005,PCMS006,PCMS007,PCMS008,PCMS009, PCMS010,PCMS011,PCMS012,PCMS013,DCB001, DCB002,DCB003,DCB004,DCB005,DCB006,DCB007, DCB008,DCB009,DCB010,DCB011,DCB012,DCB013, DCB014,DCB015
FCC ID:	2A2V2-DCB2050

Issued By: Flux Compliance Service Laboratory
Add: Room 105 Floor Bao hao Technology Building 1 NO.15 Gong ye West Road Hi-Tech Industrial, Song shan lake Dongguan
Tel: 0769-27280901 Fax:0769-27280901 http://www.fcs-lab.com

TEST RESULT CERTIFICATION

Applicant Name.....:	JETION INTERNATIONAL LIMITED
Address..... :	ROOM 413, NO. 3 DAGUAN ZHONG ROAD,TIANHE DISTRICT. GUANGZHOU. GUANGDONG.CHINA
Manufacture Name.....:	JETION INTERNATIONAL LIMITED
Address..... :	ROOM 413, NO. 3 DAGUAN ZHONG ROAD,TIANHE DISTRICT. GUANGZHOU. GUANGDONG.CHINA

Product Description

Product Name..... :	Wireless Mouse
Brand Name .....:	N/A
Model Name..... :	PJT-BMS2002
Series Model.....:	See the first page of the report
Test Standards..... :	FCC Rules and Regulations Part 15 Subpart C, Section 249
Test Procedure..... :	ANSI C63.10-2020 + Cor. 1-2023+C63.10a-2024 + Errata C63.10a-2024

This device described above has been tested FCS, the test results show that the equipment under test (EUT) is in compliance with the FCC requirements. And it is applicable only to the tested sample identified in the report.
This report shall not be reproduced except in full, without the written approval of FCS, this document may be altered or revised by FCS, personal only, and shall be noted in the revision of the document..

Date of Test..... :

Date (s) of performance of tests. :	Aug. 10, 2026~Aug. 18, 2026
Date of Issue.....:	Aug. 18, 2026
Test Result.....:	Pass

Tested by : orange OuYang

(orange OuYang)

Reviewed by : Jaydne Li

(Jaydne Li)

Approved by : Jack Wang

(Jack Wang)

Table of Contents **Page**

1. SUMMARY OF TEST RESULTS 5
1.1 TEST FACTORY 6
1.2 MEASUREMENT UNCERTAINTY 6
2. GENERAL INFORMATION 7
2.1 GENERAL DESCRIPTION OF THE EUT 7
2.2 DESCRIPTION OF THE TEST MODES 9
2.3 DESCRIPTION OF NECESSARY ACCESSORIES AND SUPPORT UNITS 10
2.4 EQUIPMENTS LIST 11
3 CONDUCTED EMISSION MEASUREMENT 12
3.1 LIMIT 12
3.2 TEST PROCEDURE 12
3.3 TEST SETUP 13
3.4 TEST RESULTS 13
4. RADIATED EMISSION MEASUREMENT 13
4.1 LIMIT 14
4.2 TEST PROCEDURE 15
4.3 TEST SETUP 16
5. BAND EDGE TEST 22
5.1 LIMIT 22
5.2 TEST PROCEDURE 22
5.3 TEST SETUP 22
5.4 TEST RESULTS 23
6. 20 DB BANDWIDTH TEST 23
6.1 LIMIT 24
6.2 TEST PROCEDURE 24
6.3 TEST SETUP 24
6.4 TEST RESULTS 25
7. ANTENNA REQUIREMENT 27
7.1 STANDARD REQUIREMENT 27
7.2 EUT ANTENNA 27

Revision History

Rev.	Issue Date	Effect Page	Contents
00	Aug. 18, 2026	N/A	Initial Issue

1. SUMMARY OF TEST RESULTS

FCC Part 15.249,Subpart C			
Standard Section	Test Item	Judgment	Remark
15.207	Conducted Emission	N/A	--
15.205(a), 15.209(a), 15.249(a), 15.249(c)	Radiated Spurious Emission	PASS	--
15.249(a)	Field strength of fundamental	PASS	--
15.249(d)	Band Edge Emission	PASS	--
15.215(c)	20dB Bandwidth	PASS	--
15.203	Antenna Requirement	PASS	--

NOTE:

(1)" N/A" denotes test is not applicable in this Test Report

(2) All tests are according to ANSI C63.10-2020 + Cor. 1-2023+C63.10a-2024 + Errata to C63.10a-2024

1.1 TEST FACTORY

Company Name:	Flux Compliance Service Laboratory
Address:	Room 105 Floor Bao hao Technology Building 1 NO.15 Gong ye West Road Hi-Tech Industrial, Song shan lake Dongguan
Telephone:	+86-0769-27280901
Fax:	+86-0769-27280901
FCC Test Firm Registration Number: 514908 Designation number: CN0127 A2LA accreditation number：5545.01	

1.2 MEASUREMENT UNCERTAINTY

The reported uncertainty of measurement **y ±U**, where expended uncertainty **U** is based on a standard uncertainty multiplied by a coverage factor of **k=2**, providing a level of confidence of approximately **95** %.

No.	Item	Uncertainty
1	RF output power, conducted	±0.71dB
2	Unwanted Emissions, conducted	±2.98 dB
3	Conducted Emission (9KHz-150KHz)	±4.13 dB
4	Conducted Emission (150KHz-30MHz)	±4.74 dB
5	All emissions,radiated(<1G) 30MHz-1000MHz	±3.2 dB
6	All emissions,radiated (1GHz -18GHz)	±3.66 dB
7	All emissions,radiated (18GHz -40GHz)	±4.31 dB
8	Occupied bandwidth	±0.3 dB

2. GENERAL INFORMATION

2.1 GENERAL DESCRIPTION OF THE EUT

Product Name	Wireless Mouse
Trade Name	N/A
Model Name	PJT-BMS2002
Series Model	See the first page of the report
Channel List	Please refer to the Note 2.
Specification	Frequency:2402-2480MHz Modulation: GFSK
Power Supply	N/A
Battery	1.5V
Hardware version number	V1.0
Software version number	V1.0
Connecting I/O Port(s)	Please refer to the User's Manual

Note:

1. For a more detailed features description, please refer to the manufacturer's specifications or the User's Manual.

2. **Channel List**

Channel No.	Frequency (MHz)	Channel No.	Frequency (MHz)
0	2402	1	2404
2	2406	3	2408
4	2410	5	2412
6	2414	7	2416
8	2418	9	2420
10	2422	11	2424
12	2426	13	2428
14	2430	15	2432
16	2434	17	2436
18	2438	19	2440
20	2442	21	2444
22	2446	23	2448
24	2450	25	2452
26	2454	27	2456
28	2458	29	2460
30	2462	31	2464
32	2466	33	2468
34	2470	35	2472
36	2474	37	2476
38	2478	39	2480

3. Table for Filed Antenna

Ant.	Brand	Model Name	Antenna Type	Connector	Gain (dBi)	NOTE
1	N/A	N/A	PCB Antenna	N/A	1.74	Antenna

2.2 DESCRIPTION OF THE TEST MODES

To investigate the maximum EMI emission characteristics generates from EUT, the test system was pre-scanning tested base on the consideration of following EUT operation mode or test configuration mode which possible have effect on EMI emission level. Each of these EUT operation mode(s) or test configuration mode(s) mentioned above was evaluated respectively.

Test software:Button

The device under test (EUT) is programmed into continuous transmission mode, which realizes fixed frequency and switching channels by pressing the button.

No.	Test model descrption
1	Low channel GFSK
2	Middle channel GFSK
3	High channel GFSK

Note:

1. All the test modes can be supply by battery, only the result of the worst case recorded in the report. GFSK mode is worst mode.
2. For radiated emission, 3 axis were chosen for testing for each applicable mode.
3. The EUT used fully charge battery when tested.
4. During the test, the dutycycle>98%, the test voltage was tuned from 85% to 115% of the Nominal rate supply votage, and found that the worst case was the nominal rated supply condition, So the report just shows that condition's data

Configuration and peripherals

Mode 1:

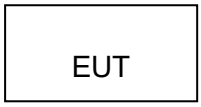

DC 1.5V From Battery

2.3 DESCRIPTION OF NECESSARY ACCESSORIES AND SUPPORT UNITS

The EUT has been tested as an independent unit together with other necessary accessories or support units. The following support units or accessories were used to form a representative test configuration during the tests.

Necessary accessories

Item	Equipment	Mfr/Brand	Model/Type No.	Serial No.	Note
N/A	N/A	N/A	N/A	N/A	N/A

Support units

Item	Equipment	Mfr/Brand	Model/Type No.	Serial No.	Note
N/A	N/A	N/A	N/A	N/A	N/A

Note:

(1) The support equipment was authorized by Declaration of Confirmation.

(2) For detachable type I/O cable should be specified the length in cm in 『Length』 column.

(3) “YES” is means “shielded” “with core”; “NO” is means “unshielded” “without core”.

2.4 EQUIPMENTS LIST

Radiation Test equipment

Kind of Equipment	Manufacturer	Type No.	Company No.	Last calibration	Calibrated until
EMI Test Receiver	R&S	ESRP 3	FCS-E001	2025.08.25	2026.08.24
Signal Analyzer	R&S	FSV40-N	FCS-E012	2025.08.25	2026.08.24
Active loop Antenna	ZHINAN	ZN30900C	FCS-E013	2025.08.25	2026.08.24
Bilog Antenna	SCHWARZBECK	VULB 9168	FCS-E002	2025.08.25	2026.08.24
Horn Antenna	SCHWARZBECK	BBHA 9120D	FCS-E003	2025.08.25	2026.08.24
SHF-EHF Horn Antenna (18G-40GHz)	A-INFO	LB-180400-KF	FCS-E018	2025.08.25	2026.08.24
Pre-Amplifier(0.1M-3G Hz)	EMCI	EM330N	FCS-E004	2025.08.25	2026.08.24
Pre-Amplifier (1G-18GHz)	N/A	TSAMP-0518SE	FCS-E014	2025.08.25	2026.08.24
Pre-Amplifier (18G-40GHz)	TERA-MW	TRLA-0400	FCS-E019	2025.08.25	2026.08.24
Temperature & Humidity	HTC-1	victor	FCS-E005	2025.08.25	2026.08.24
Testing Software	EZ-EMC(Ver.STSLAB 03A1 RE)				

Conduction Test equipment

Kind of Equipment	Manufacturer	Type No.	Company No.	Last calibration	Calibrated until
EMI Test Receiver	R&S	ESPI	FCS-E020	2025.08.25	2026.08.24
LISN	R&S	ENV216	FCS-E007	2025.08.25	2026.08.24
LISN	ETS	3810/2NM	FCS-E009	2025.08.25	2026.08.24
Temperature & Humidity	HTC-1	victor	FCS-E008	2025.08.25	2026.08.24
Testing Software	EZ-EMC(Ver.EMC-CON 3A1.1)				

RF Connected Test

Kind of Equipment	Manufacturer	Type No.	Company No.	Last calibration	Calibrated until
MXA SIGNAL Analyzer	Keysight	N9020A	FCS-E015	2025.08.25	2026.08.24
Spectrum Analyzer	Agilent	E4447A	MY50180039	2025.08.25	2026.08.24
Spectrum Analyzer	R&S	FSV-40	101499	2025.08.25	2026.08.24
Testing Software	LzRf V1.0				

Test Equipment Calibration

All of the test equipment is effective use and calibration certification institution, GRGT, the address is 163 tianhe district in huangpu road xiping cloud road .Guangzhou,China

3 CONDUCTED EMISSION MEASUREMENT

3.1 LIMIT

Operating frequency band. In case the emission fall within the restricted band specified on Part 207(a) limit in the table below has to be followed.

FREQUENCY (MHz)	Conducted Emissionlimit (dBuV)	
	Quasi-peak	Average
0.15 -0.5	66 - 56 *	56 - 46 *
0.50 -5.0	56.00	46.00
5.0 -30.0	60.00	50.00

Note:
(1) The tighter limit applies at the band edges.
(2) The limit of " * " marked band means the limitation decreases linearly with the logarithm of the frequency in the range.

3.2 TEST PROCEDURE

The following table is the setting of the receiver

Receiver Parameters	**Setting**
Attenuation	10 dB
Start Frequency	0.15 MHz
Stop Frequency	30 MHz
IF Bandwidth	9 kHz

a. The EUT was 0.8 meters from the horizontal ground plane and 0.4 meters from the vertical ground plane with EUT being connected to the power mains through a line impedance stabilization network (LISN). All other support equipments powered from additional LISN(s). The LISN provide 50 Ohm/ 50uH of coupling impedance for the measuring instrument.
b. Interconnecting cables that hang closer than 40 cm to the ground plane shall be folded back and forth in the center forming a bundle 30 to 40 cm long.
c. I/O cables that are not connected to a peripheral shall be bundled in the center. The end of the cable may be terminated, if required, using the correct terminating impedance. The overall length shall not exceed 1 m.
d. LISN at least 80 cm from nearest part of EUT chassis.
e. For the actual test configuration, please refer to the related Item –EUT Test Photos.

3.3 TEST SETUP

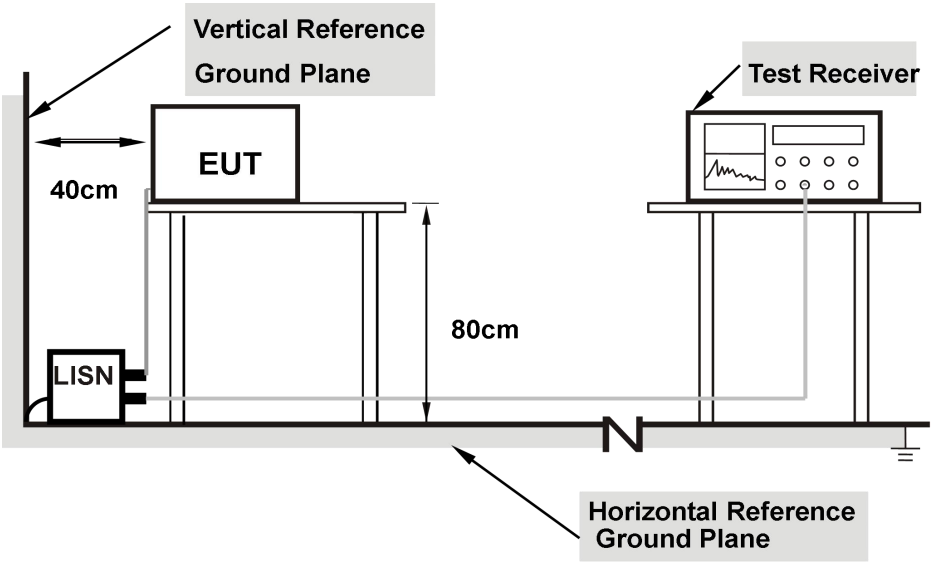

Note: 1.Support units were connected to second LISN.

2.Both of LISNs (AMN) are 80 cm from EUT and at least 80 from other units and other metal planes

3.4 TEST RESULTS

Temperature:	23.6℃	Relative Humidity:	57%
Phase:	L/N	Test Mode:	N/A
Test Voltage:	N/A		

Note: product is battery operated and conducted emission test is not applicable.

4. RADIATED EMISSION MEASUREMENT

4.1 LIMIT

In any 100 kHz bandwidth outside the operating frequency band. In case the emission fall within the Restricted band specified on Part15.205(a)&209(a) limit in the table and according toANSI C63.10-2020 + Cor. 1-2023+C63.10a-2024 + Errata to C63.10a-2024 below has to be followed

LIMITS OF RADIATED EMISSION MEASUREMENT (0.009MHz - 1000MHz

Frequencies (MHz)	Field Strength (micorvolts/meter)	Measurement Distance (meters)
0.009~0.490	2400/F(KHz)	300
0.490~1.705	24000/F(KHz)	30
1.705~30.0	30	30
30~88	100	3
88~216	150	3
216~960	200	3
Above 960	500	3

LIMITS OF RADIATED EMISSION MEASUREMENT (1GHz-25 GHz)

FREQUENCY (MHz)	(dBuV/m) (at 3M)	
	PEAK	AVERAGE
Above 1000	74	54

LIMITS OF FIELD STRENGTH OF THE FUNDAMENTAL SIGNAL

FREQUENCY (MHz)	(dBuV/m) (at 3M)	
	PEAK	AVERAGE
2400-2483.5	114	94

Notes:

(1) The limit for radiated test was performed according to FCC PART 15C.
(2) The tighter limit applies at the band edges.
(3) Emission level (dBuV/m)=20log Emission level (uV/m).

4.2 TEST PROCEDURE

Spectrum Parameter	Setting
Attenuation	Auto
Detector	Peak/AV
Start Frequency	1000 MHz(Peak/AV)
Stop Frequency	10th carrier hamonic(Peak/AV)
RB / VB (emission in restricted band)	PK=1MHz / 1MHz, AV=1 MHz /10 Hz

a. The measuring distance of at 3 m shall be used for measurements at frequency 0.009MHz up to 1GHz,and above 1GHz.
b. The EUT was placed on the top of a rotating table 0.8 meters (above 1GHz is 1.5 m) above the ground at a 3 meter anechoic chamber test site. The table was rotated 360 degrees to determine the position of the highest radiation.
c. The height of the equipment shall be 0.8 m(above 1GHz is 1.5 m); the height of the test antenna shall vary between 1 m to 4 m. horizontal and vertical polarizations of the antenna are set to make the measurement.
d. The initial step in collecting conducted emission data is a spectrum analyzer peak detector mode pre-scanning the measurement frequency range. Significant peaks are then marked and then QuasiPeak detector mode re-measured.
e. If the Peak Mode measured value compliance with and lower than Quasi Peak Mode Limit, the EUT shall be deemed to meet QP Limits and then no additional QP Mode measurement performed.
f. For the actual test configuration, please refer to the related Item –EUT Test Photos.

Note:
Both horizontal and vertical antenna polarities were tested and performed pretest to three orthogonal axis. The worst case emissions were reported

4.3 TEST SETUP

（A）Radiated Emission Test-Up Frequency Below 30MHz

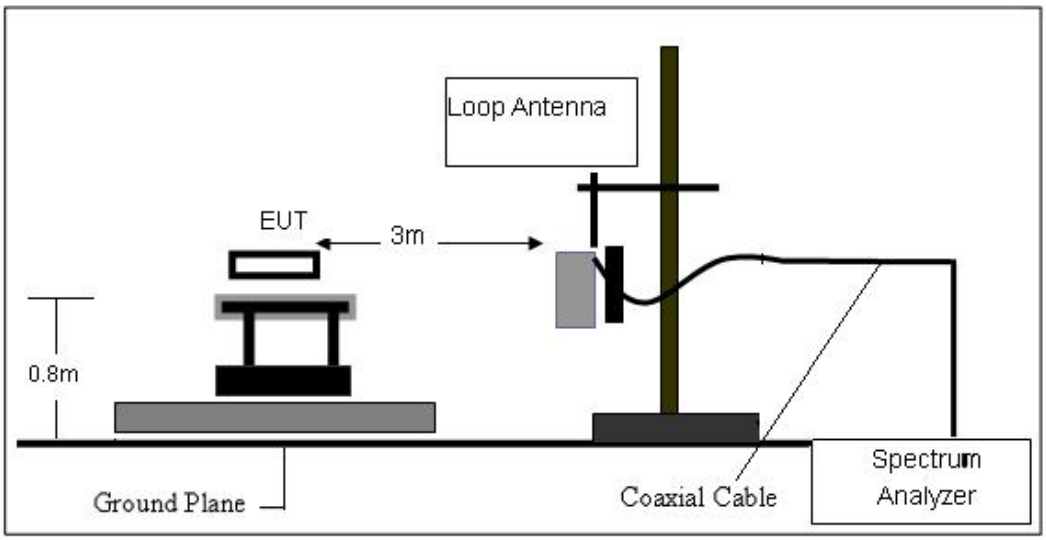

（B）Radiated Emission Test-Up Frequency 30MHz~1GHz

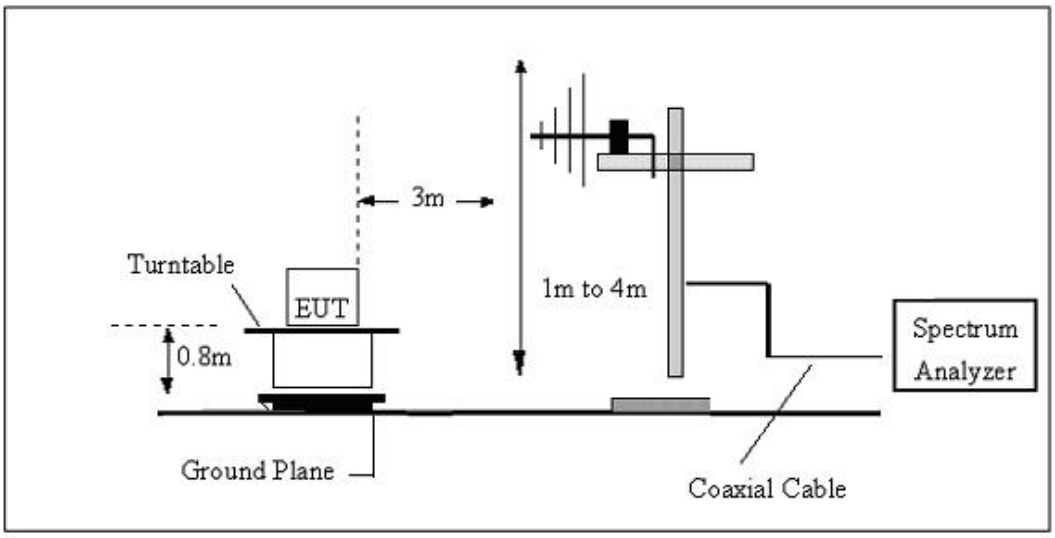

（C）Radiated Emission Test-Up Frequency Above 1GHz

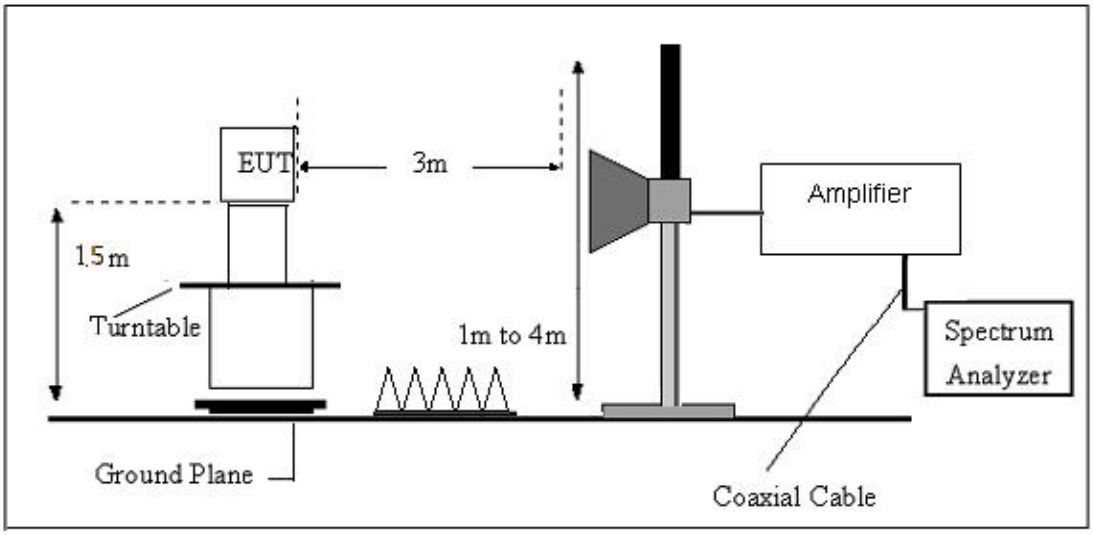

Temperature:	23.6℃	Relative Humidity:	55%
Test Voltage:	DC 1.5V	Test Mode:	GFSK

For field strength of the fundamental signal
Peak

No.	Frequency (MHz)	Reading (dBuV)	Antenna Factor (dB/m)	Cable Loss (dB)	Preamp Factor (dB/m)	Result (dBuV/m)	Limit (dBuV/m)	Margin (dB)	Remark
1	2402	92.76	27.11	3.802	47.70	75.98	114.00	-38.02	Horizontal
2	2402	85.93	27.11	3.802	47.70	69.15	114.00	-44.85	Vertical
3	2440	91.63	27.34	3.844	47.64	75.17	114.00	-38.83	Horizontal
4	2440	84.37	27.34	3.844	47.64	67.91	114.00	-46.09	Vertical
5	2480	92.05	27.58	3.888	47.58	75.94	114.00	-38.06	Horizontal
6	2480	86.14	27.58	3.888	47.58	70.03	114.00	-43.97	Vertical

Avg

No.	Frequency (MHz)	Reading (dBuV)	Antenna Factor (dB/m)	Cable Loss (dB)	Preamp Factor (dB/m)	Result (dBuV/m)	Limit (dBuV/m)	Margin (dB)	Remark
1	2402	79.04	27.11	3.802	47.70	62.26	94.00	-31.74	Horizontal
2	2402	73.58	27.11	3.802	47.70	56.80	94.00	-37.20	Vertical
3	2440	79.26	27.34	3.844	47.64	62.80	94.00	-31.20	Horizontal
4	2440	72.65	27.34	3.844	47.64	56.19	94.00	-37.81	Vertical
5	2480	78.51	27.58	3.888	47.58	62.40	94.00	-31.60	Horizontal
6	2480	73.42	27.58	3.888	47.58	57.31	94.00	-36.69	Vertical

For spurious emission

(9KHz-30MHz)

Freq.	Reading	Limit	Margin	State	Test Result
(MHz)	(dBuV/m)	(dBuV/m)	(dB)	P/F	
--	--	--	--	--	PASS
--	--	--	--	--	PASS

Note:
The amplitude of spurious emissions which are attenuated by more than 20dB below the permissible value has no need to be reported.
Distance extrapolation factor =40 log (specific distance/test distance)(dB);
Limit line = specific limits (dBuv) + distance extrapolation factor.

(30MHZ-1000MHZ)

Temperature:	23.2℃	Relative Humidity:	67%
Test Voltage:	DC 1.5V	Phase:	Horizontal
Test Mode:	GFSK		

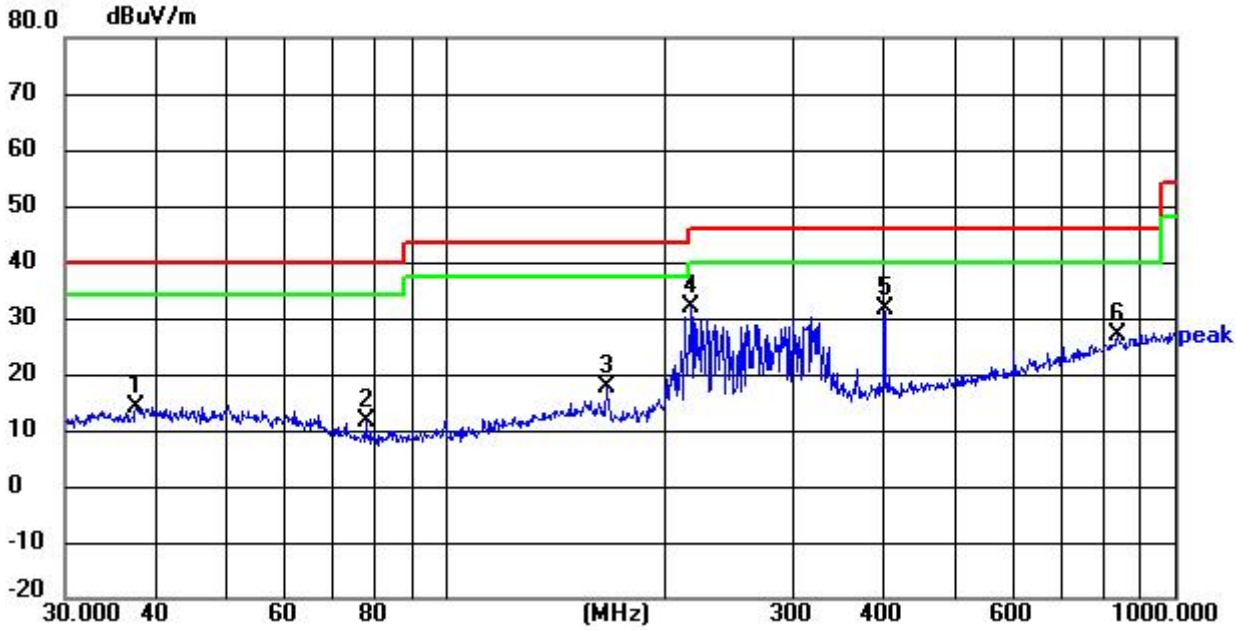

No.	Frequency (MHz)	Reading (dBuV)	Factor (dB/m)	Level (dBuV/m)	Limit (dBuV/m)	Margin (dB)	Detector
1	37.5479	25.79	-11.81	13.98	40.00	-26.02	QP
2	77.5928	27.84	-16.35	11.49	40.00	-28.51	QP
3	166.6514	29.61	-11.85	17.76	43.50	-25.74	QP
4 *	216.7828	46.42	-14.36	32.06	46.00	-13.94	QP
5	400.4319	41.00	-9.57	31.43	46.00	-14.57	QP
6	833.3171	27.93	-1.07	26.86	46.00	-19.14	QP

Note: 1. level= Reading level+ Factor, Margin=Measurement-Limit

Temperature:	22.4℃	Relative Humidity:	57%
Test Voltage:	DC 1.5V	Phase:	Vertical
Test Mode:	GFSK		

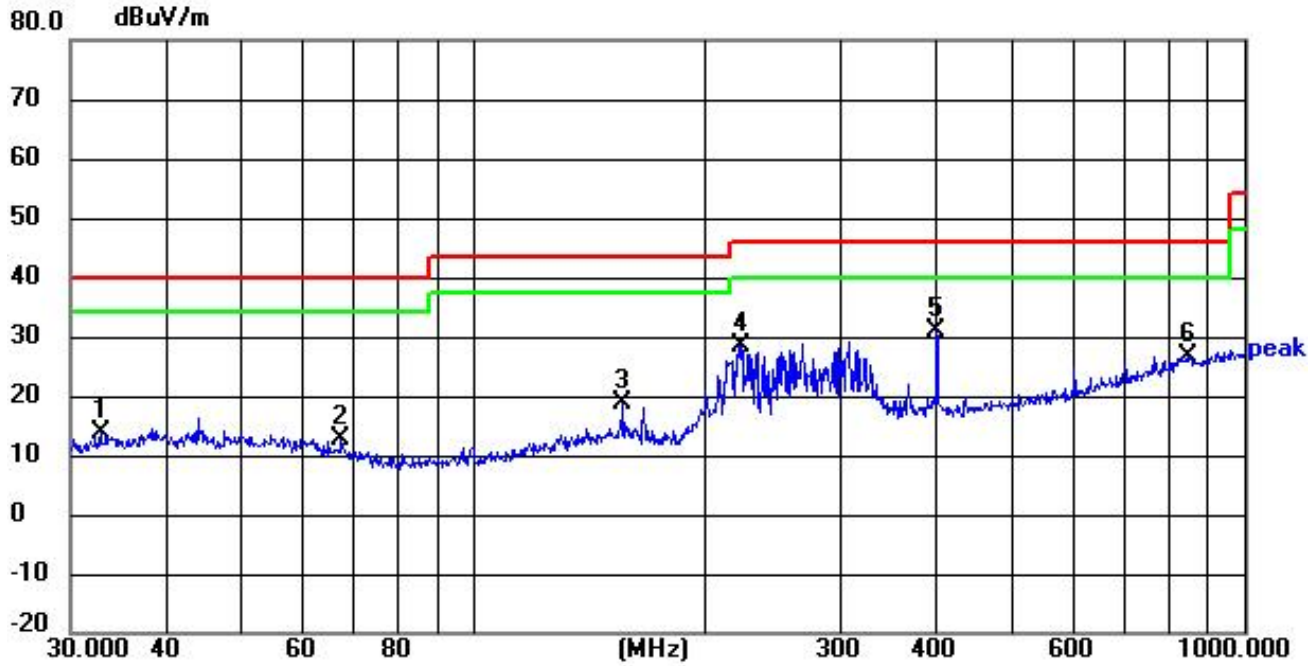

No.	Frequency (MHz)	Reading (dBuV)	Factor (dB/m)	Level (dBuV/m)	Limit (dBuV/m)	Margin (dB)	Detector
1	32.8637	25.97	-12.30	13.67	40.00	-26.33	QP
2	67.4382	27.02	-14.44	12.58	40.00	-27.42	QP
3	156.4578	29.93	-11.33	18.60	43.50	-24.90	QP
4	222.9502	42.28	-13.94	28.34	46.00	-17.66	QP
5 *	399.0302	40.34	-9.61	30.73	46.00	-15.27	QP
6	845.0878	27.61	-0.89	26.72	46.00	-19.28	QP

Note: 1. level= Reading level+ Factor, Margin=Measurement-Limit

(1GHZ~25GHZ)

Low CH, Peak

Frequency (MHz)	Reading (dBuV)	Antenna Factor (dB/m)	Cable Loss (dB)	Preamp Factor (dB/m)	Result (dBuV/m)	Limit (dBuV/m)	Margin (dB)	Remark
4804.00	57.93	32.01	5.775	43.81	51.90	74	-22.10	Vertical
7206.00	50.37	35.19	6.425	42.55	49.43	74	-24.57	Vertical
9608.00	48.15	37.32	7.274	41.74	51.00	74	-23.00	Vertical
12025.00	*					74		Vertical
14430.00	*					74		Vertical
4804.00	49.94	32.01	5.775	43.81	43.91	74	-30.09	Horizontal
7206.00	47.63	35.19	6.425	42.55	46.69	74	-27.31	Horizontal
9608.00	46.84	37.32	7.274	41.74	49.69	74	-24.31	Horizontal
12025.00	*					74		Horizontal
14430.00	*					74		Horizontal

Note:

1.For emissions above 1GHz, if peak level comply with average limit, then the average level is deemed to comply with average limit.

2.The amplitude of spurious emissions which are attenuated more than 20 dB below the limitsare not reported.

Middle Peak

Frequency (MHz)	Reading (dBuV)	Antenna Factor (dB/m)	Cable Loss (dB)	Preamp Factor (dB/m)	Result (dBuV/m)	Limit (dBuV/m)	Margin (dB)	Remark
4880.00	58.85	32.16	5.823	43.69	53.14	74	-20.86	Vertical
7320.00	50.36	35.38	6.489	42.42	49.81	74	-24.19	Vertical
9760.00	48.43	37.40	7.350	41.64	51.54	74	-22.46	Vertical
12200.00	*					74		Vertical
14640.00	*					74		Vertical
4880.00	50.77	32.16	5.823	43.69	45.06	74	-28.94	Horizontal
7320.00	46.91	35.38	6.489	42.42	46.36	74	-27.64	Horizontal
9760.00	44.42	37.40	7.350	41.64	47.53	74	-26.47	Horizontal
12200.00	*					74		Horizontal
14640.00	*					74		Horizontal

Note:

1.For emissions above 1GHz, if peak level comply with average limit, then the average level is deemed to comply with average limit.

2.The amplitude of spurious emissions which are attenuated more than 20 dB below the limitsare not reported.

High Peak

Frequency (MHz)	Reading (dBuV)	Antenna Factor (dB/m)	Cable Loss (dB)	Preamp Factor (dB/m)	Result (dBuV/m)	Limit (dBuV/m)	Margin (dB)	Remark
4960.00	57.47	32.74	5.874	43.56	52.52	74	-21.48	Vertical
7440.00	50.16	35.86	6.556	42.27	50.30	74	-23.70	Vertical
9920.00	48.53	37.46	7.430	41.55	51.87	74	-22.13	Vertical
12400.00	*					74		Vertical
14880.00	*					74		Vertical
4960.00	50.55	32.74	5.874	43.56	45.60	74	-28.40	Horizontal
7440.00	47.92	35.86	6.556	42.27	48.06	74	-25.94	Horizontal
9920.00	46.26	37.46	7.430	41.55	49.60	74	-24.40	Horizontal
12400.00	*					74		Horizontal
14880.00	*					74		Horizontal

Note:

1. For emissions above 1GHz, if peak level comply with average limit, then the average level is deemed to comply with average limit.

2. The amplitude of spurious emissions which are attenuated more than 20 dB below the limitsare not reported.

5. BAND EDGE TEST

5.1 LIMIT

According to §15.249(d), Emissions radiated outside of the specified frequency bands, except for harmonics, shall be attenuated by at least 50 dB below the level of the fundamental or to the general radiated emission limits in §15.209, whichever is the lesser attenuation.

5.2 TEST PROCEDURE

a. The EUT is placed on a turntable, which is 1.5m above ground plane.

b. EUT is set 3m away from the receiving antenna, which is varied from 1m to 4m to find out the highest emissions.

c. Use the following spectrum analyzer settings:
Span = wide enough to fully capture the emission being measured, RBW = 1 MHz, VBW ≥ RBW, Sweep = auto, Detector function = peak, Trace = max hold
Follow the guidelines in ANSI C63.10 with respect to maximizing the emission by rotating the EUT, adjusting the measurement antenna height and polarization, etc.

d. The peak reading of the emission, after being corrected by the antenna factor, cable loss, pre-amp gain, etc., is the peak field strength, submit this data. Each emission was to be maximized by changing the polarization of receiving antenna both horizontal and vertical.

e. Set the VBW to 10 Hz, while maintaining all of the other instrument settings. This peak level, once corrected, must comply with the limit specified in Section 15.209. If the duty cycle per channel of the hopping signal is less than 100 ms, then the reading obtained with the 10 Hz VBW may be further adjusted by a “duty cycle correction factor”, derived from 20log(duty cycle/100 ms), in an effort to demonstrate compliance with the 15.209 limit. Submit this data.

5.3 TEST SETUP

Radiated Emission Test-Up Frequency Above 1GHz

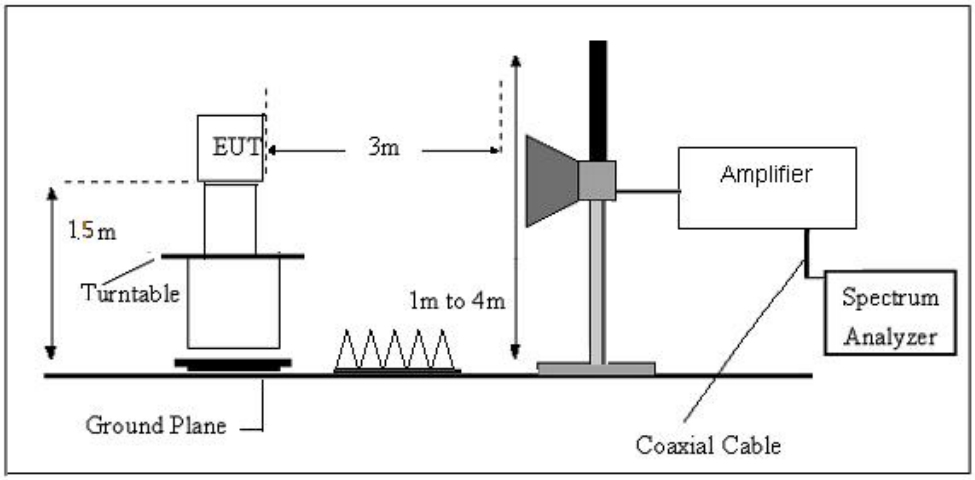

5.4 TEST RESULTS

Low CH (GFSK)

Peak

Frequency (MHz)	Read Level (dBuV)	Antenna Factor (dB/m)	Cable Loss (dB)	Preamp Factor (dB)	Level (dBuV/m)	Limit Line (dBuV/m)	Over Limit (dB)	Polarization
2310.00	57.26	27.62	3.70	47.84	40.74	74	-33.26	Horizontal
2390.00	57.45	27.14	3.79	47.72	40.66	74	-33.34	Horizontal
2400.00	58.16	27.10	3.80	47.70	41.36	74	-32.64	Horizontal
2310.00	56.92	27.62	3.70	47.84	40.40	74	-33.60	Vertical
2390.00	57.45	27.14	3.79	47.72	40.66	74	-33.34	Vertical
2400.00	58.27	27.10	3.80	47.70	41.47	74	-32.53	Vertical

High CH(GFSK)

Peak

Frequency (MHz)	Read Level (dBuV)	Antenna Factor (dB/m)	Cable Loss (dB)	Preamp Factor (dB)	Level (dBuV/m)	Limit Line (dBuV/m)	Over Limit (dB)	Polarization
2483.50	57.38	27.60	3.89	47.57	41.30	74	-32.70	Horizontal
2500.00	59.17	27.70	3.91	47.55	43.23	74	-30.77	Horizontal
2483.50	58.37	27.60	3.89	47.57	42.29	74	-31.71	Vertical
2500.00	58.24	27.70	3.91	47.55	42.30	74	-31.70	Vertical

Remark.
1.Final Level =Receiver Read level + Antenna Factor + Cable Loss - Preamplifier Factor
2.The amplitude of spurious emissions which are attenuated more than 20 dB below the limits are not reported.
3.All restriction band have been tested, and only the worst case is shown in report
4.For emissions above 1GHz, if peak level comply with average limit, then the average level is deemed to comply with average limit.

6. 20 DB BANDWIDTH TEST

6.1 LIMIT

According to 15.215 (c) Intentional radiators operating under the alternative provisions to the general emission limits, as contained in § 15.217 through 15.257 and in Subpart E of this part, must be designed to ensure that the 20 dB bandwidth of the emission, or whatever bandwidth may otherwise be specified in the specific rule section under which the equipment operates, is contained within the frequency band designated in the rule section under which the equipment is operated. The requirement to contain the designated bandwidth of the emission within the specified frequency band includes the effects from frequency sweeping, frequency hopping and other modulation techniques that may be employed as well as the frequency stability of the transmitter over expected variations in temperature and supply voltage. If a frequency stability is not specified in the regulations, it is recommended that the fundamental emission be kept within at least the central 80% of the permitted band in order to minimize the possibility of out-of-band operation

6.2 TEST PROCEDURE

a. Check the calibration of the measuring instrument using either an internal calibrator or a known signal from an external generator

b. Position the EUT without connection to measurement instrument. Turn on the EUT and connect it to measurement instrument. Then set it to any one convenient frequency within its operating range. Set a reference level on the measuring instrument equal to the highest peak value.

c. Measure the frequency difference of two frequencies that were attenuated 20 dB from the reference level. Record the frequency difference as the emission bandwidth.

6.3 TEST SETUP

6.4 TEST RESULTS

Temperature:	25℃	Relative Humidity:	50%
Test Mode:	GFSK	Test Voltage:	DC 1.5V

Frequency	20dB Bandwidth (MHz)	Result
2402 MHz	2.088	PASS
2440 MHz	2.104	PASS
2480 MHz	2.112	PASS

Keysight Spectrum Analyzer - Swept SA
Marker 3 Δ 2.104000000 MHz
PNO: Wide
IFGain:Low
Trig: Free Run
Atten: 20 dB
Avg Type: Log-Pwr
Avg|Hold:>100/100
05:06:39 PM Aug 14, 2026
ΔMkr3 2.104 MHz
-0.016 dB
10 dB/div Ref 10.00 dBm
Log
-23.77 dBm
Center 2.440000 GHz
#Res BW 30 kHz
#VBW 100 kHz
Span 4.000 MHz
Sweep 4.267 ms (1001 pts)
1 N 1 f 2.438 912 GHz -23.967 dBm
2 N 1 f 2.440 024 GHz -3.765 dBm
3 Δ1 1 f (Δ) 2.104 MHz (Δ) -0.016 dB

Keysight Spectrum Analyzer - Swept SA
Marker 3 Δ 2.112000000 MHz
PNO: Wide
IFGain:Low
Trig: Free Run
Atten: 20 dB
Avg Type: Log-Pwr
Avg|Hold:>100/100
05:08:06 PM Aug 14, 2026
ΔMkr3 2.112 MHz
-0.013 dB
10 dB/div Ref 10.00 dBm
Log
-24.05 dBm
Center 2.480000 GHz
#Res BW 30 kHz
#VBW 100 kHz
Span 4.000 MHz
Sweep 4.267 ms (1001 pts)
1 N 1 f 2.478 908 GHz -24.282 dBm
2 N 1 f 2.480 032 GHz -4.046 dBm
3 Δ1 1 f (Δ) 2.112 MHz (Δ) -0.013 dB

7. ANTENNA REQUIREMENT

7.1 STANDARD REQUIREMENT

15.203 requirement: For intentional device, according to 15.203: an intentional radiator shall be designed to ensure that no antenna other than that furnished by the responsible party shall be used with the device.

7.2 EUT ANTENNA

The antennas used for this product are PCB antenna and other than that furnished by the responsible party shall be used with the device, the maximum peak gain of the transmit antenna is 1.74dBi.

※※※※※END OF THE REPORT※※※※※