ADCBBI02

Product Overview

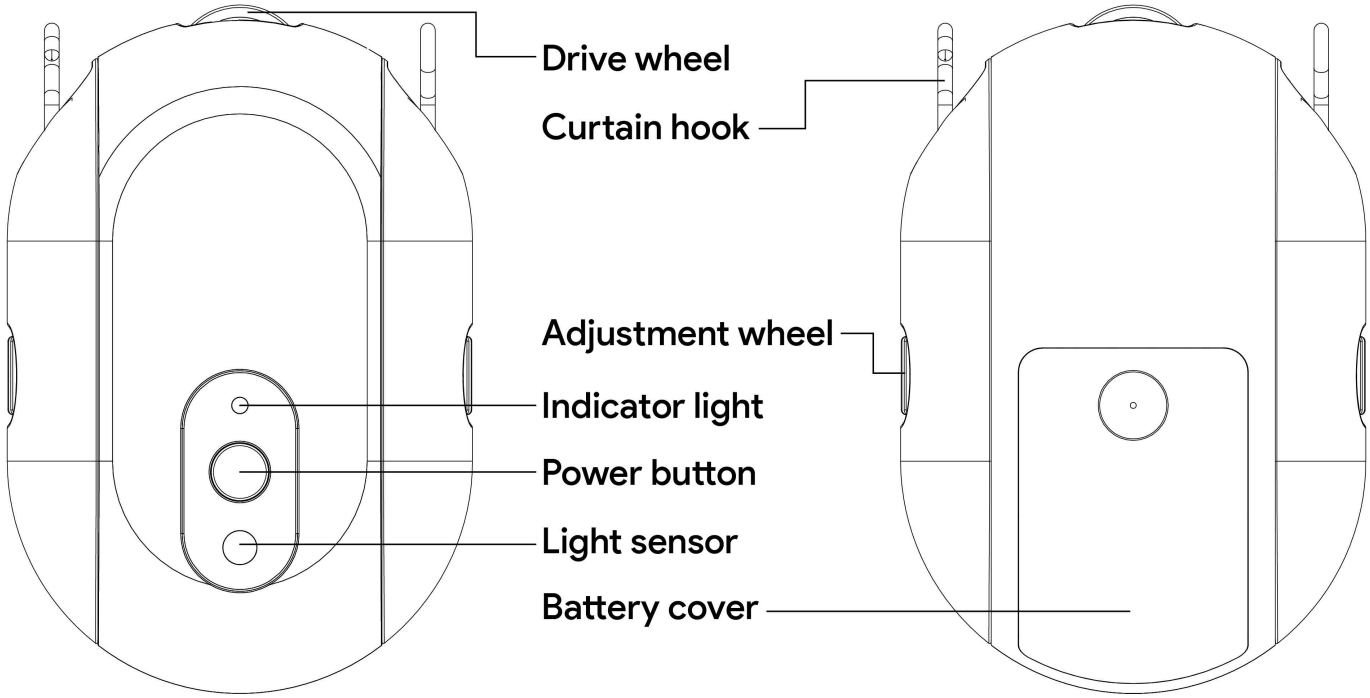

The Curtain Robot is an innovative smart home device that transforms your traditional curtains into smart curtains in minutes. It uses BLE5.0 wireless protocol. With a mobile app, you can effortlessly control the opening and closing of the curtains. It features a built-in timer to customize the timing of your curtains' movements, adding convenience to your smart living experience. Paired with a Bluetooth gateway, this robot can seamlessly integrate into your home automation system for remote control and automated operations, enhancing the comfort and modernity of your home.

Operation video.mp4
134.07MB

https://www.youtube.com/embed/EOkw5zJ3_lI

Device charging

It is recommended to use a 5V/1A power adapter with a Type-C interface charging cable to charge the product.

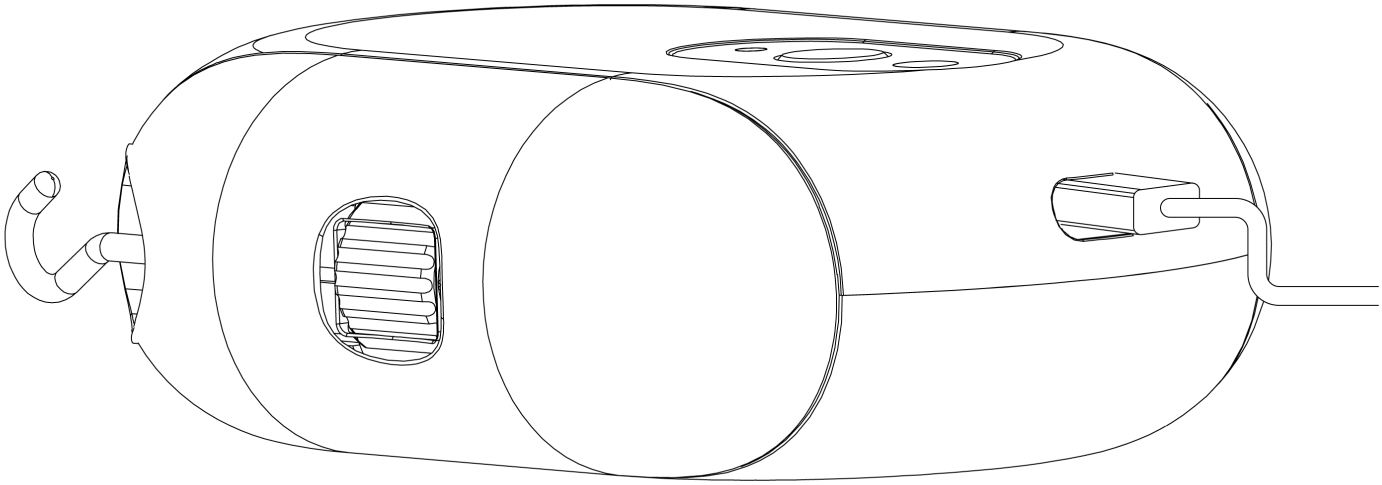

Device Pairing

Smart Life App is the mobile platform for controlling IoT devices. You can search "Smart Life" in the mobile application store to install the App.

When pairing your Curtain Robot with your account, you need to reset the device. Please press and hold the reset button for 5 seconds until the blue light starts flashing, indicating that the device is now in pairing mode.

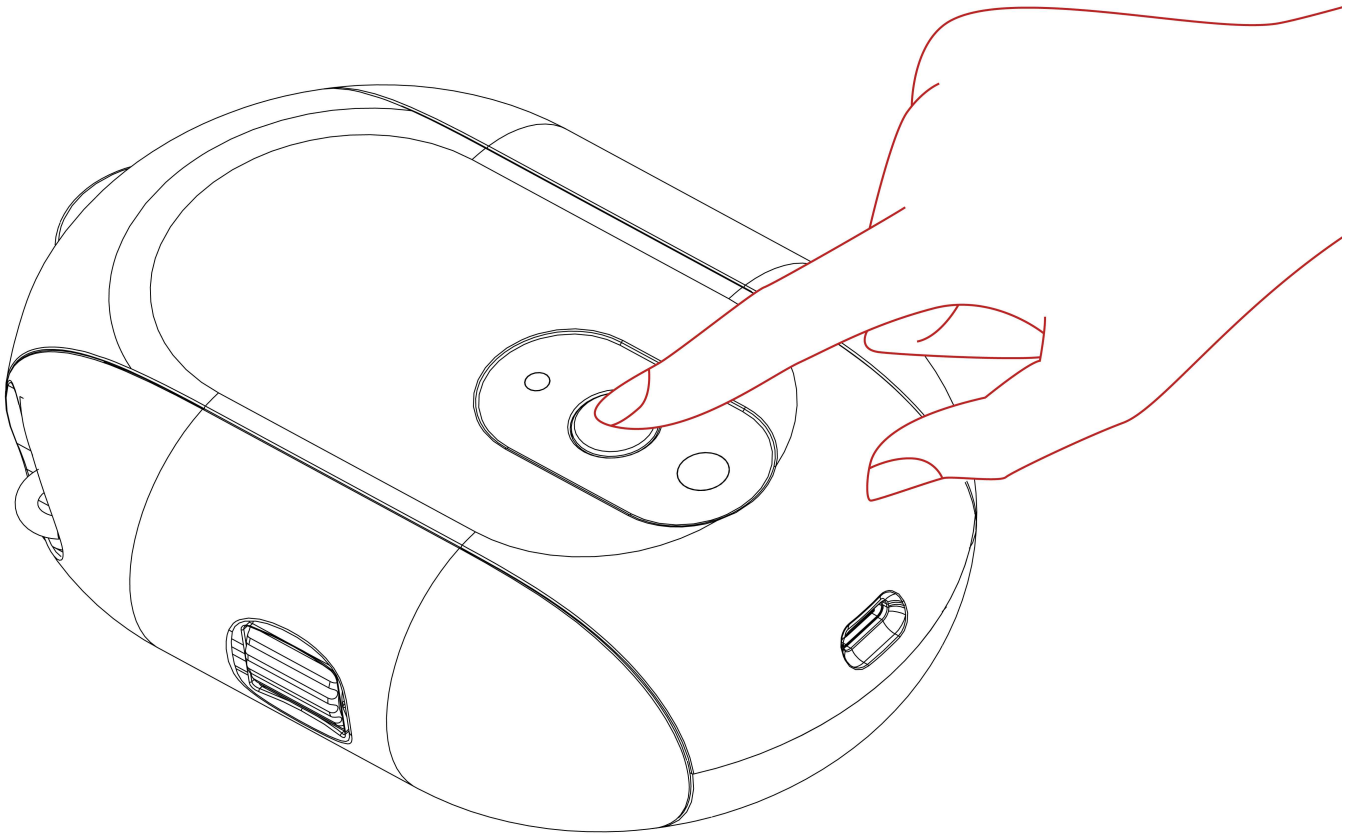

Tap the "+" icon at the top right corner in the app, then click the "Add Device" button. In the "Discover Devices" section, select "Curtain Robot" and click "Add". Follow the on-screen

instructions to complete the device pairing.

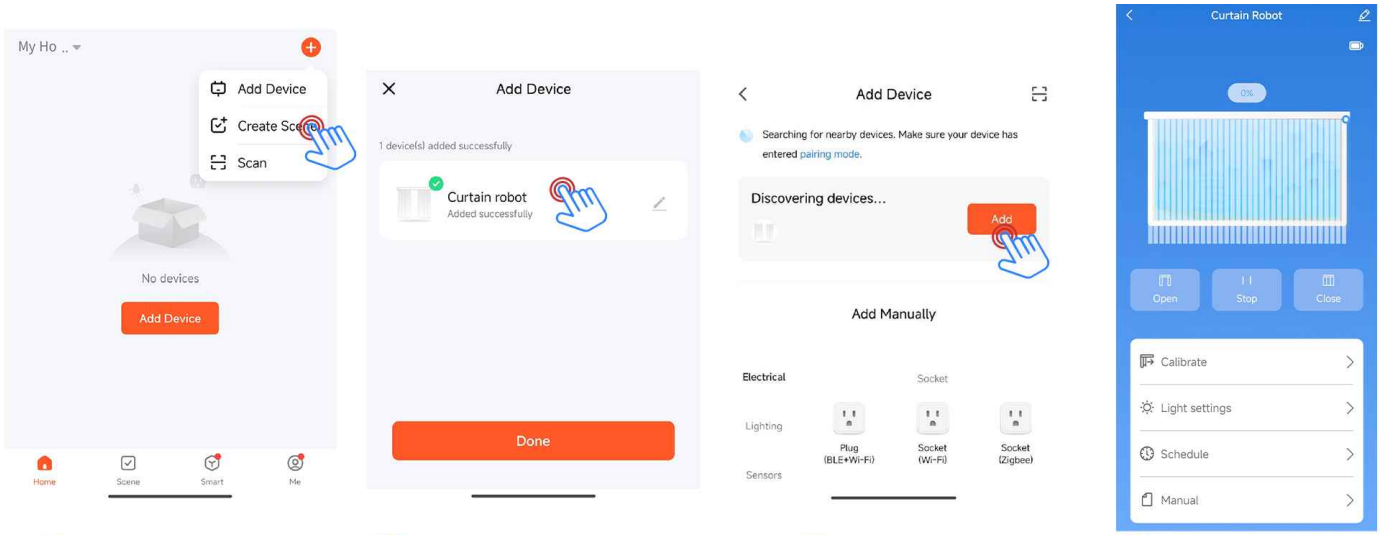

1 Click "Add devices" 2 Click "Curtain robot" 3 Click "Add" 4 Add completed

Device Setup

Preparation work:

1. Before installing the equipment, wipe the track and dry it, then remove the curtain hook at the installation position.
2. Hang the removed hook on the front hook and reserve two hooks in the installation position to install the curtain robot.

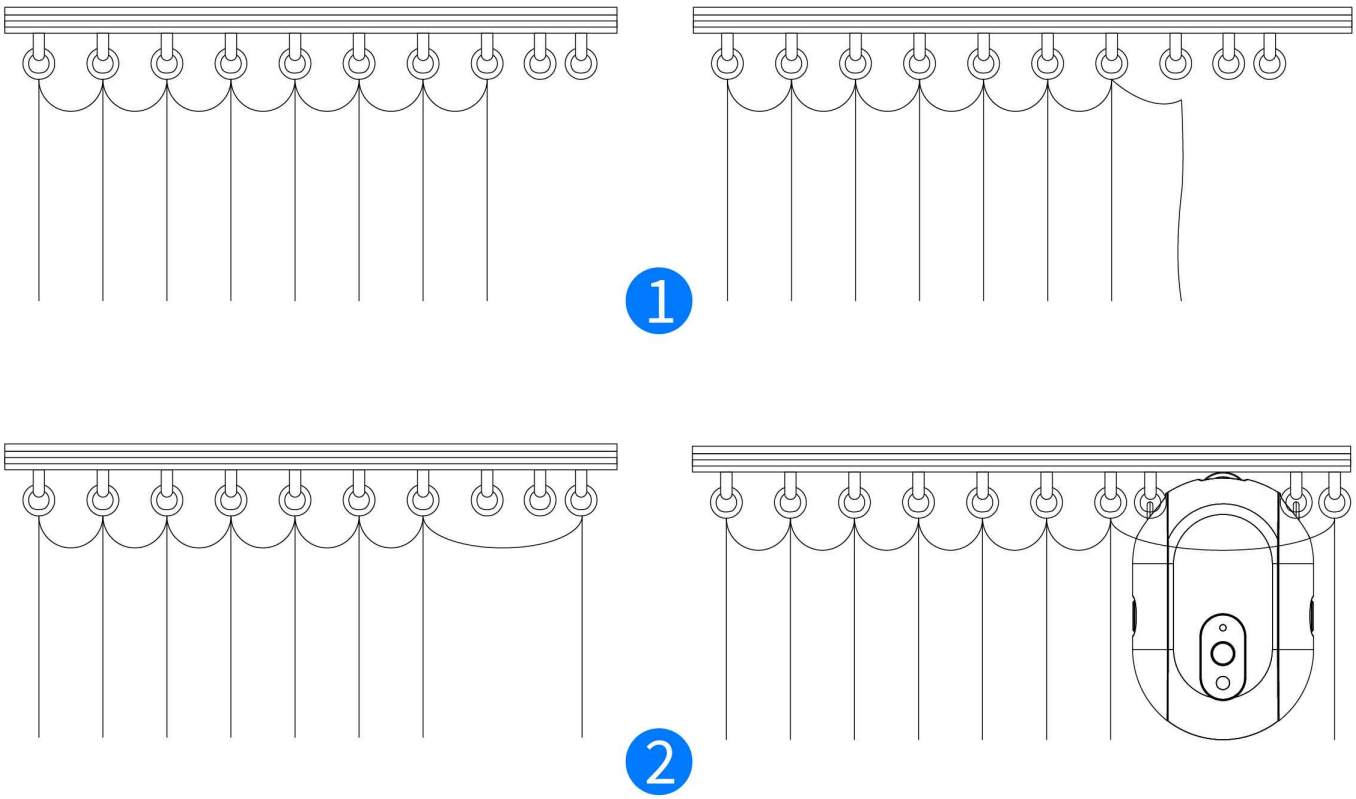

To install your curtain robot:

1. Slide down from the main body of the robot to remove the hook accessories on both sides.
2. Adjust the hooks to the topmost position using the knobs on the sides.
3. Attach the hooks to the corresponding curtain rings on both sides.
4. Reassemble the main body of the curtain robot with the hooks on both sides.
5. Adjust the knobs on both sides to ensure the top wheels of the curtain robot fit snugly against the curtain track.

Tip: During installation, you can tilt the curtain robot to the left and right to easily adjust the tightness of the side knobs. This product is suitable for curtain track I-shaped track and U-shaped track.

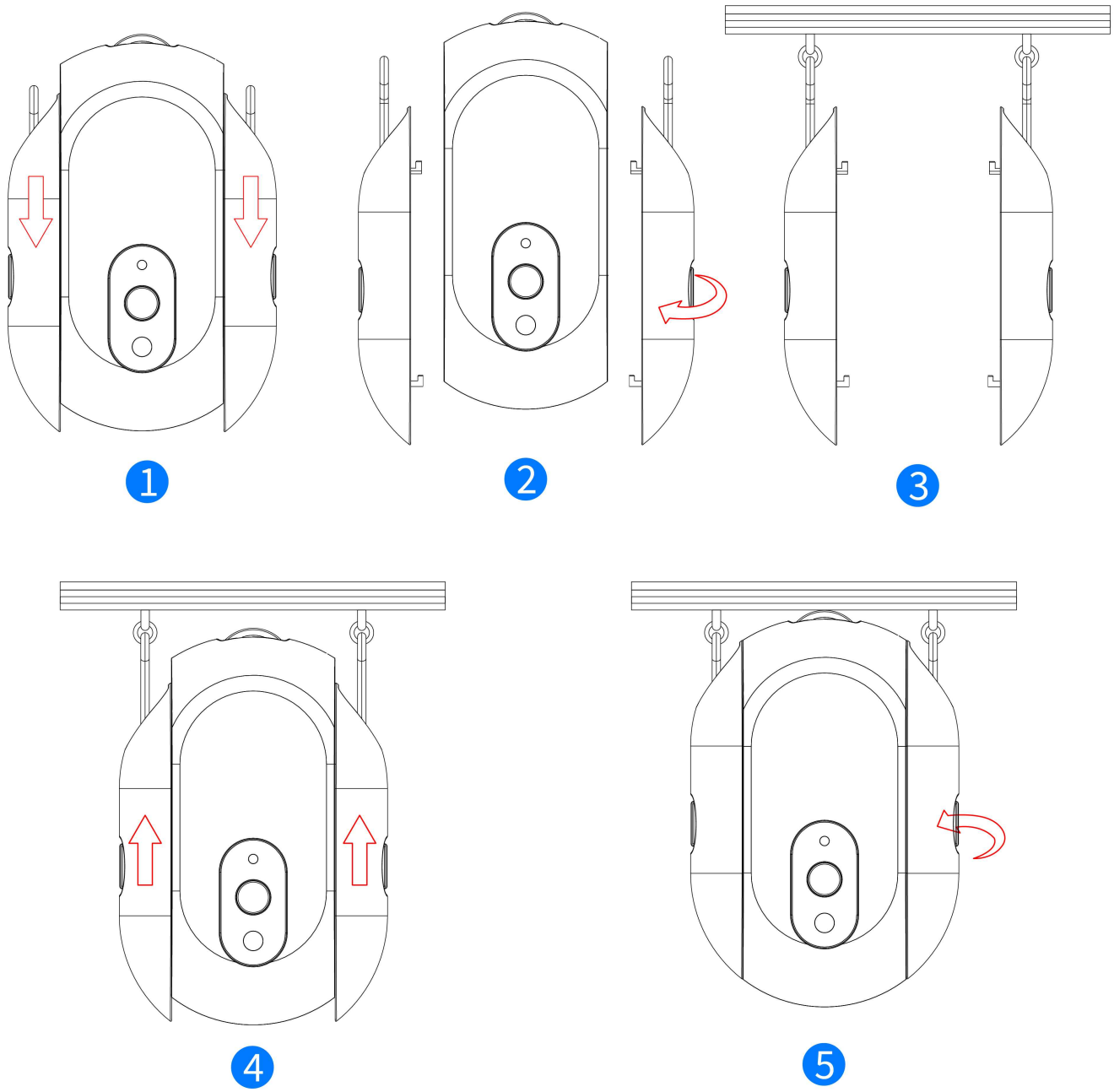

Device Control

Curtain Calibration

Before using the curtain robot, please calibrate it by following these steps

1. Pull the curtains to the fully closed position and correctly install the curtain robot.
2. After entering the device panel, click on "Calibrate".
3. Select "Indoor" or "Outdoor" according to the orientation of the curtain robot button, and click Next.
4. Select the track direction where the curtain is located and click Next.
5. Select the curtain type and click Next.
6. Click the start button to start calibration.
7. When the curtains are fully open, immediately click the stop button to complete the calibration.
8. Calibration successful, click "Confirm" to jump to the control interface to complete calibration.

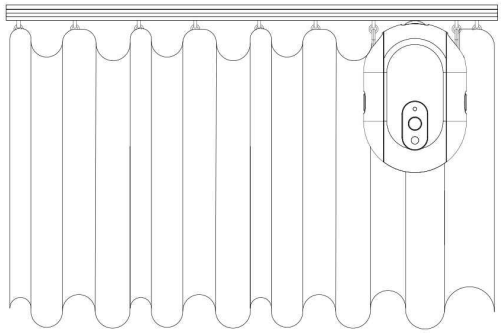

1

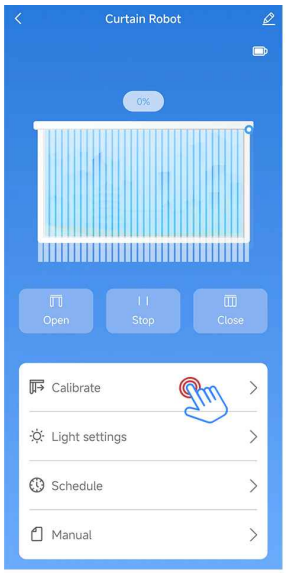

2

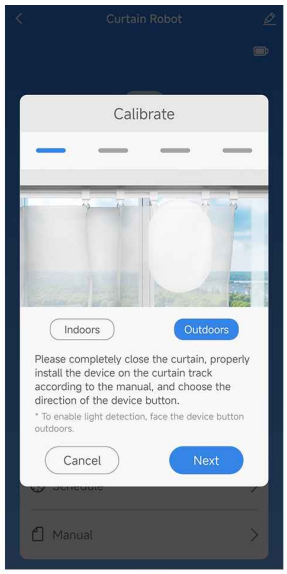

3

4

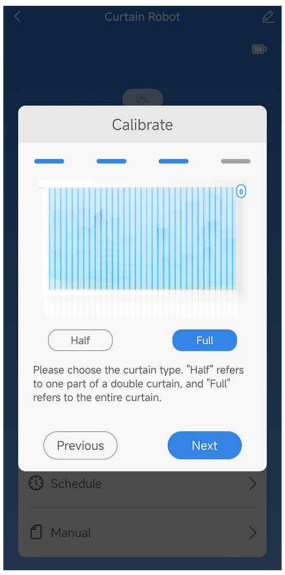

5

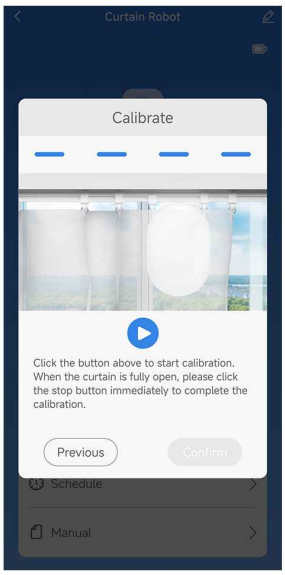

6

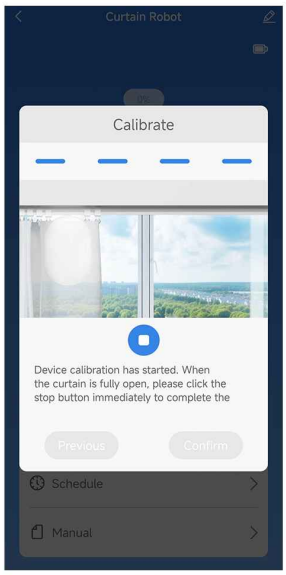

7

8

Device Triggering

After entering the device panel, tap the "Open" icon to make the curtain robot move in the direction that opens the curtains, and the "Close" icon to make it move in the direction that closes them. The actions will occur within 3 seconds if the connection is strong.For precise control, you can adjust the curtains to any position using the two slideable buttons located above the curtain.

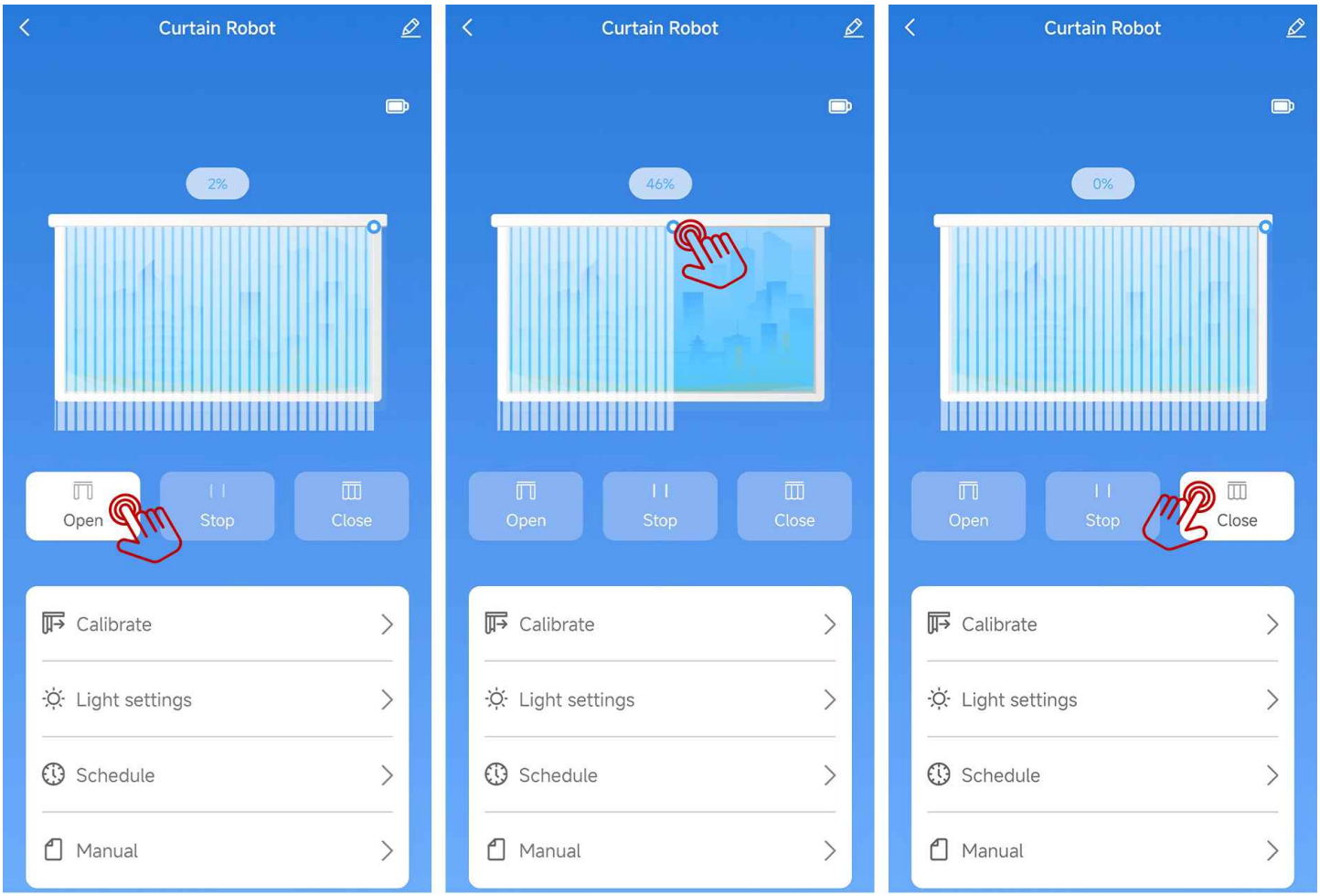

Open the curtains | Opening and closing percentage control | Close the curtains

Note: For best performance, avoid manually pulling the curtains while the curtain robot is in operation.

Double Curtains (2 curtain robots required)

After completing the calibration of the left and right curtains, you can control the opening or closing of both sides simultaneously by following these steps:

1. Click "+" in the upper right corner of the Tuya Smart APP.

2. Click "Create Scene."

3. Click "Launch Tap-to-Run."

4. Select "Add Task."

5. In the task selection box, choose "Control Single Device" and select the curtain robot you want to control. Choose "Open/Close" under control.

6. Repeat step 5 to add the other curtain robot.

7. Create a name for the tap-to-run, such as "Curtains Open," "Curtains Closed," etc.

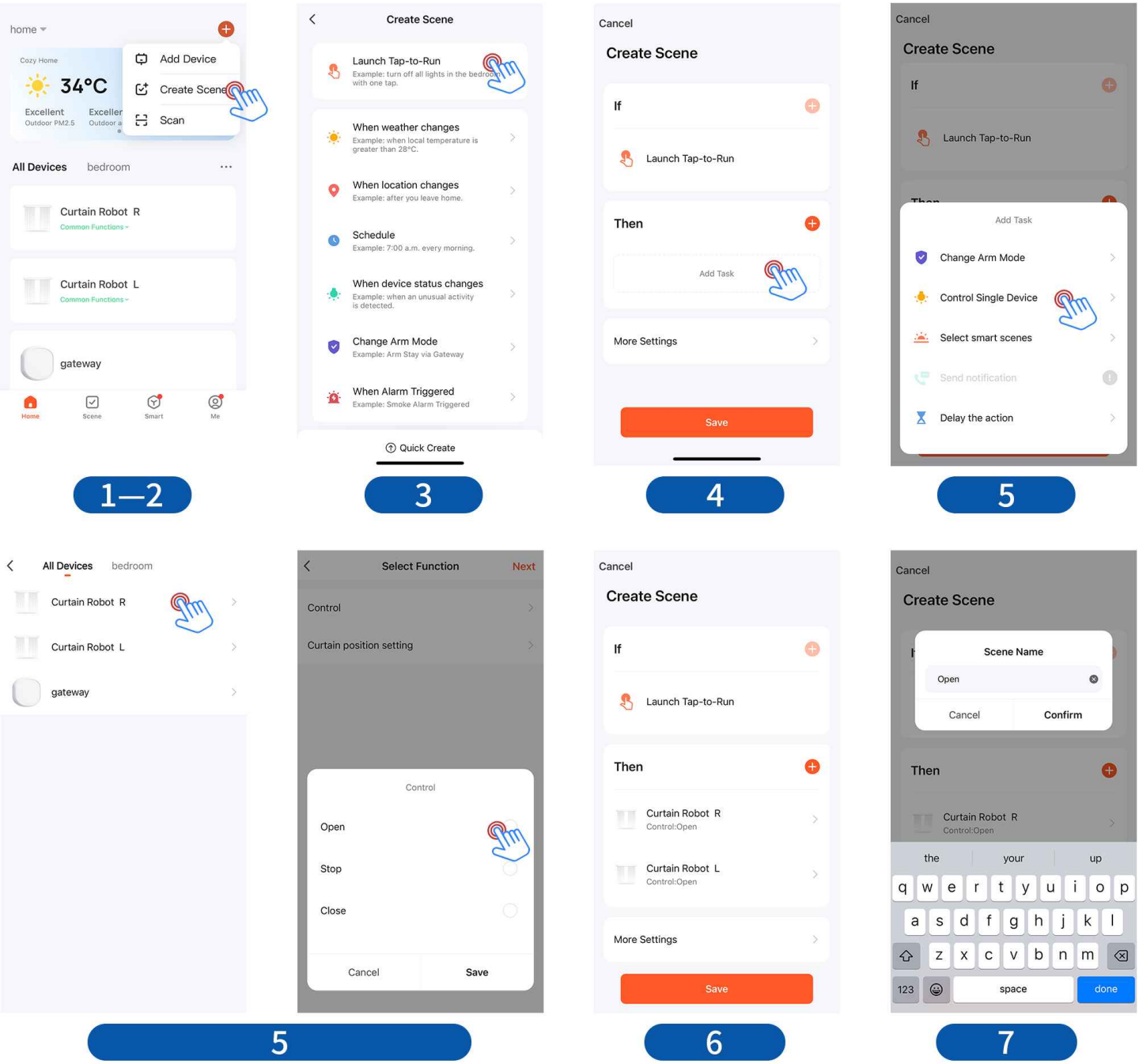

Curtain Follow (2 curtain robots required)

After completing the calibration of the left and right curtains, you can make device 2 perform the same or opposite action as device 1 by following these steps:

1. Click "+" in the upper right corner of the Tuya Smart APP.
2. Click "Create Scene."
3. Click "When device status changes."
4. In the "If" section, Select "Curtain Robot R" and choose "Control: Open"
5. In the "Then" section, add "Curtain Robot L" and choose "Open/Close" under control.
6. Create a name for the scene, such as "Open Follow," "Close Follow," etc.

7. Repeat steps 1-6 to add as many smart scenes as you want.

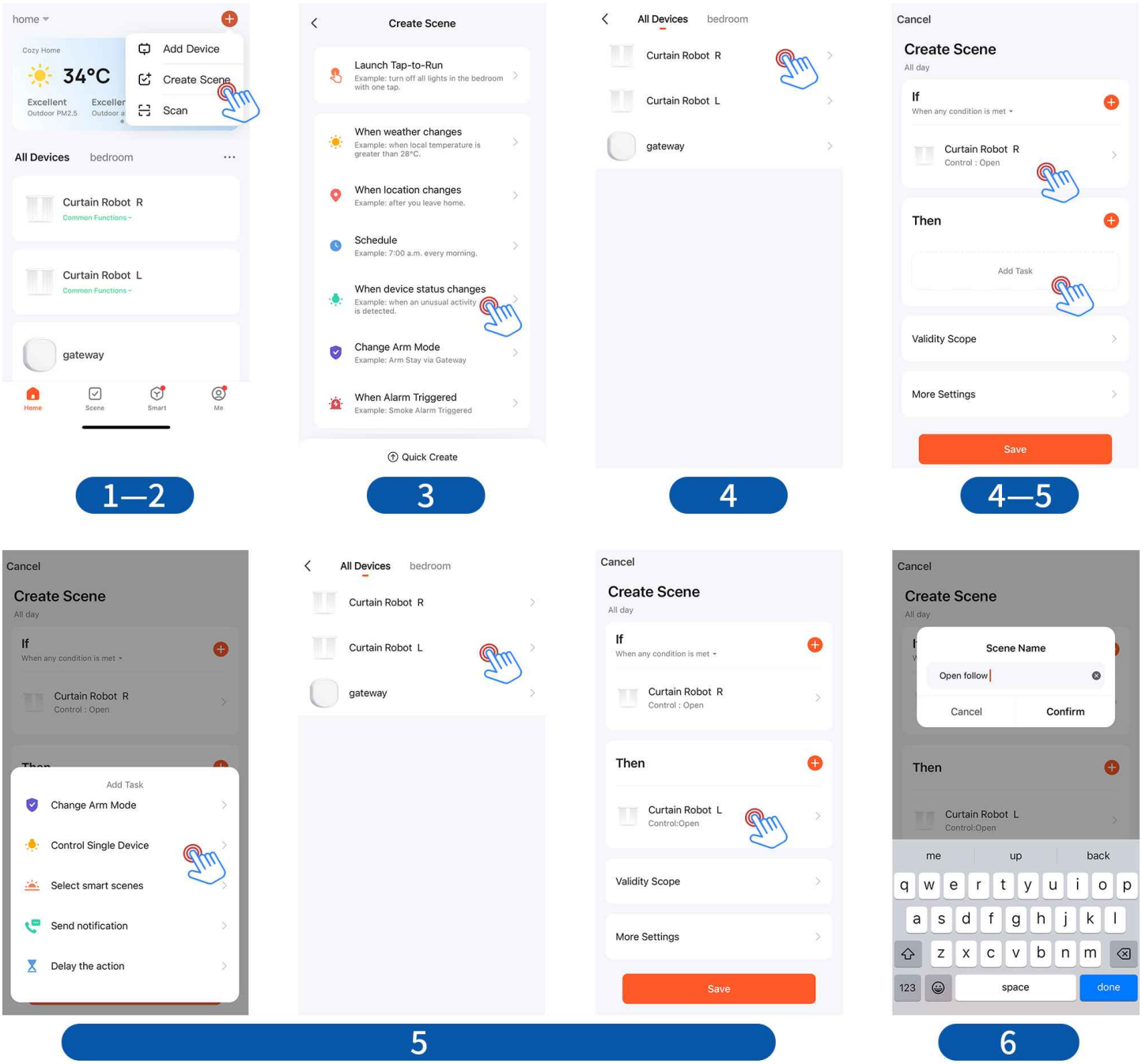

Use of Roman poles

When the distance between the pull ring hook position of the Roman pole and the bottom end of the pole does not exceed 24 millimeters, this product can be directly applied without the need to purchase additional Roman pole accessories. Please refer to the attached example diagram for more details for intuitive understanding.

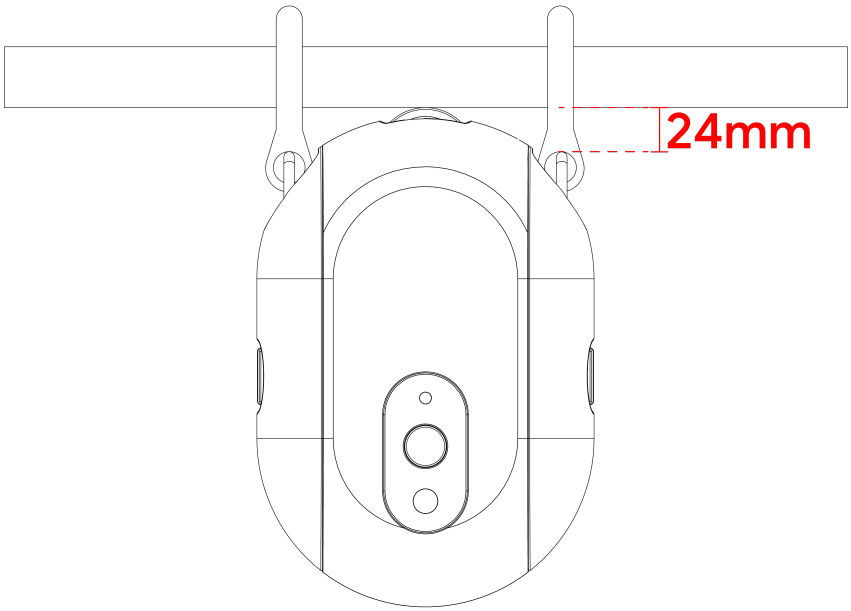

Warning

This product is not waterproof. It contains batteries and therefore should not be used in damp or high-temperature environments. Do not obstruct the movement of the curtain robot while it is operating, as this may cause damage to the internal mechanical structure and the internal motor.

Specifications

Dimensions: 95 x 43 x 140 mm

Weight: 312 grams

Wireless protocol: Bluetooth 5.0

Battery type: 3.7V lithium battery

Working temperature: 0°C～45°C/ 32°F～113°F

Working humidity: 0 to 95% RH, non-condensing

Package content: 1 Curtain Robot , 1 Charging data cable

FCC Warning

This device complies with part 15 of the FCC rules. Operation is subject to the following two conditions: (1) this device may not cause harmful interference, and (2) this device must accept any inte rference received, including interference that may cause undesired operation.

Changes or modifications not expressly approved by the party responsible for compliance could void the user's authority to operate the equipment.

NOTE: This equipment has been tested and found to comply with the limits for a Class B digital device, pursuant to part 15 of the FCC Rules. These limits are designed to provide reasonable protection against harmful interference in a residential installation. This equipment generates uses and can radiate radio frequency energy and, if not installed and used in accordance with the instructions, may cause harmful interference to radio communications. However, there is no guarantee that interference will not occur in a particular installation. If this equipment does cause harmful interferenceto radio or television reception, which can be determined by turning the equipment off and on, the user is encouraged to try to correct the interference by one or more of the following measures:

- Reorient or relocate the receiving antenna.
- Increase the separation between the equipment and receiver.
- Connect the equipment into an outlet on a circuit different from that to which the receiver is connected.
- Consult the dealer or an experienced radio/TV technician for help.

Radiation Exposure Statement

The device has been evaluated to meet general RF exposure requirement. The device can be used in portable exposure condition without restriction.