MIOFIVE

DASH CAM User Manual

Please read this manual before operating your device and keep it for future reference.

MIOFIVE

DASH CAM User Manual

Please read this manual before operating your device and keep it for future reference.

MIOFIVE

DASH CAM User Manual

Please read this manual before operating your device and keep it for future reference.

Distractions can lead to accidents, and the risk of injury or death. Always keep your eyes on the road, and keep aware of your surroundings.

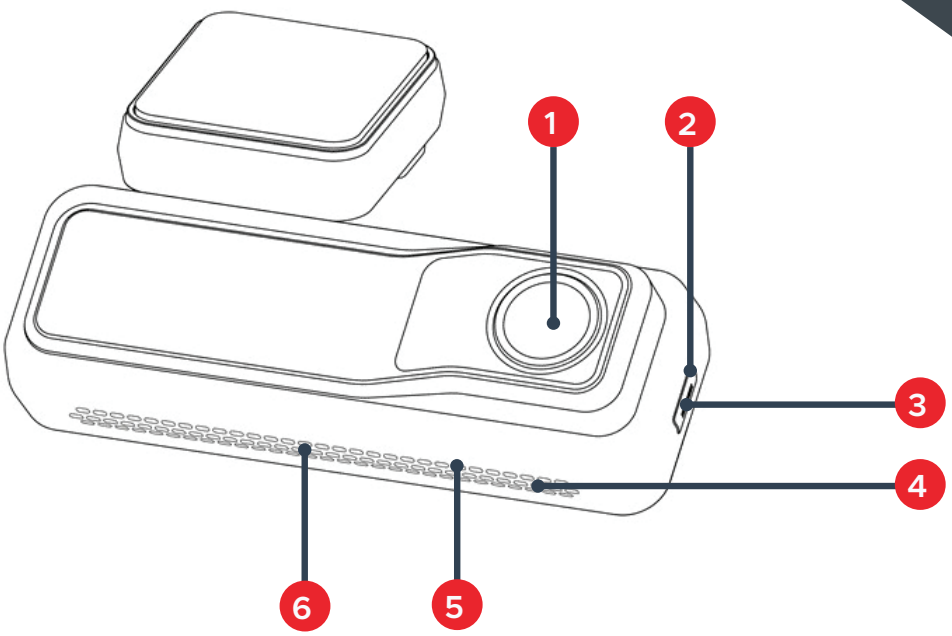

1 Camera Lens

2 Power Button

3 Status Indicator LED

4 Speaker

5 Vents

6 Microphone

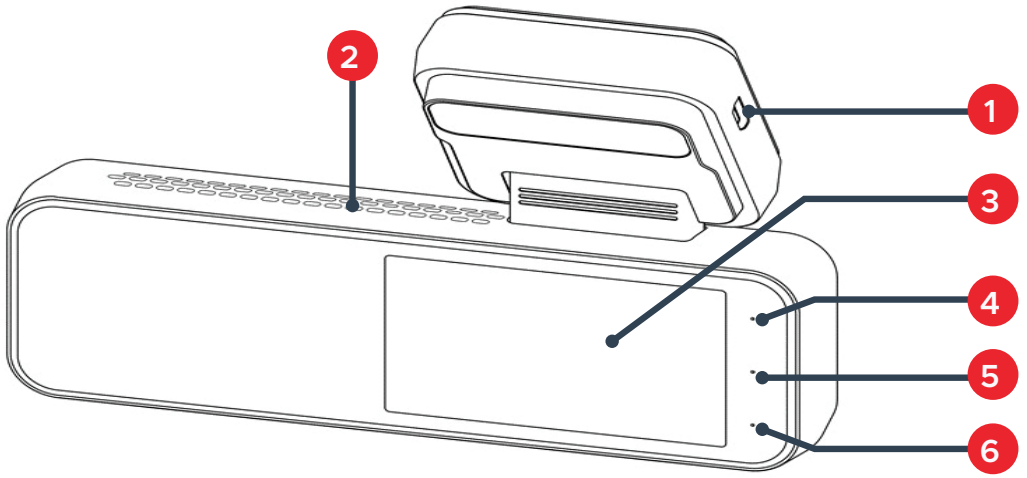

1. Power Port
2. Vents
3. Screen
4. Album/Back Button
5. Setting/Next Button
6. Emergency Video (EMER Video)/Confirm Button

Installation

1. Install the electrostatic sticker

Park your car in a safe area, and turn off the car engine. Take out the electrostatic sticker from the packing box and install it in the recommended area on the windshield, as shown in the figure below. Please clean the windshield, and remove the air bubbles between the electrostatic sticker and the windshield during the installation.

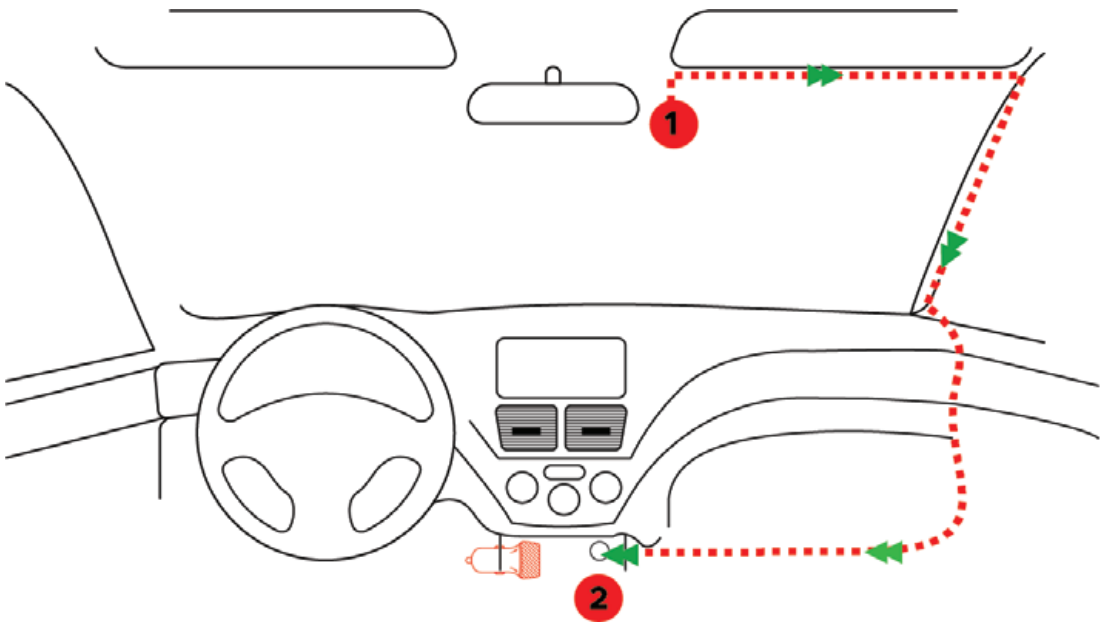

Note: Please DO NOT attached the dash cam with the sticker to the windshield before the camera calibration to ensure AI feature works properly.

2. Connect the power supply

Connec t the USB cable to the micro USB port of the ①Dash Cam. Run the cable along the edge of the windshield, tucking it away in the seams (With the Crowbar), and extend it all the way to the USB port of the ② Car Charger. Be sure to keep it away from the airbag area.

Insert the ② Car Charger into your cigarette lighter, connect the ① Dash Cam to the Car Charger.

3. Camera Calibration

You need to find a good position and angle to install the dash cam. Start the car engine (DO NOT install under driving) to power on and start from pressing the Setting Button in the middle on the right side, find System Settings → AI → Camera calibration. Align vertical line to the center, horizontal line to the vanishing point of the road in the preview LCD screen as shown below. Make sure the dash cam does not interfere with the driver's view.

Note: The AI accuracy is dramatically effected by the position of installation. Please install carefully.

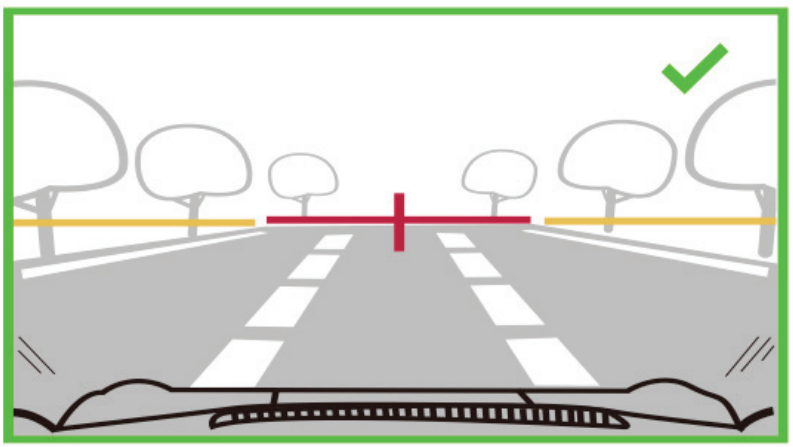

The vanishing point of the road is in the button of the image.

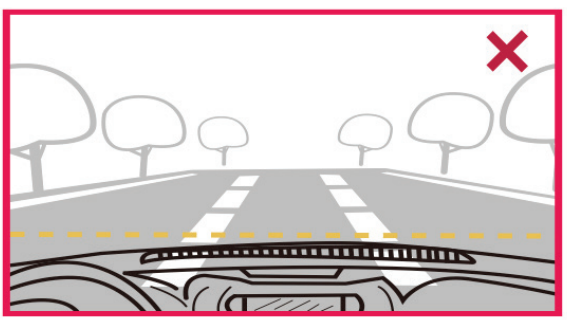

The camera is tilted

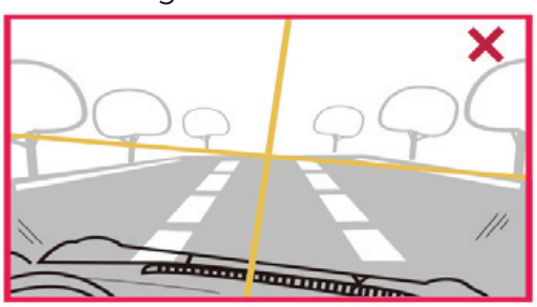

The engine cover occupy too much area in the image

4. Attach the Dash Cam

Remove the protective sticker on the Dash Cam bracket and attach the Dash Cam to the center of the electrostatic sticker (the sweet spot in step 3), as shown in the figure below. Press the bracket mount by hand to ensure that the heat resistant adhesive is in close contact with the electrostatic sticker. Lock the bracket to the Dash Cam. You will hear a snap when it is in place.

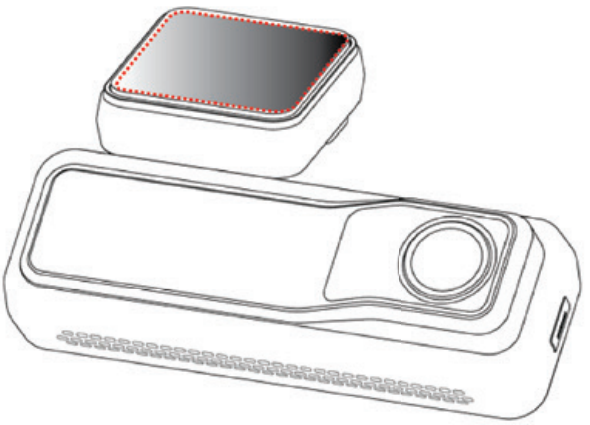

5. Check and adjust the dash cam angle

Ensure your dash cam is installed as the right angle in step 3. You may adjust the camera angle up or down against the preview screen to ensure that the camera is facing correctly.

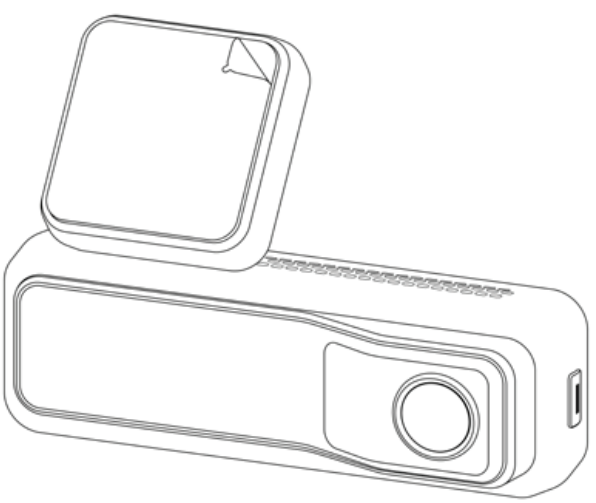

Miofive Dash Cam App Download

Please scan the QR code below or search 'Miofive' in App Store or Google Play to download the App.

Note: In order to connect to Dash Cam Wi-Fi, please list the APP in your trust application list and make sure the Dash Cam Wi-Fi is on.

Systems Supported:

Android 5.0 and above / iOS 10.0 and above.

Using Your Miofive APP

Connect to the Dash Cam

1. Check the indicator status on the dash cam, make sure the power indicator slowly blinks green.

2. Make sure your phone and dash cam are in close range (within 2 meters).

3. Go to Phone Wi-Fi Setting and turn Wi-Fi on.

4. Launch the Miofive APP. (Recommend register account to unlock advanced features).

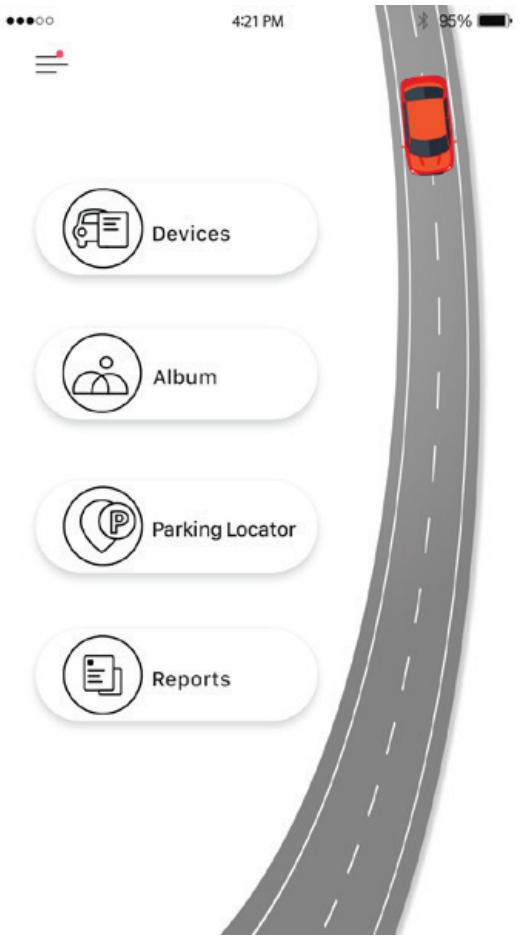

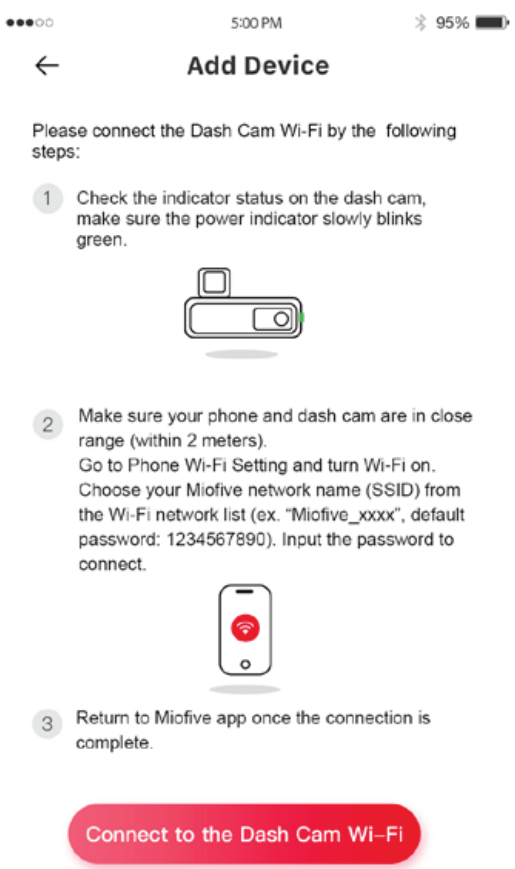

5. Press "Devices", and press" Connect to the Dash Cam Wi-Fi".

6. Choose your Miofive network name (SSID) from the Wi-Fi network list (ex. "Miofive_xxxx", default password: 1234567890). Input the password to connect.

7. Return to Miofive app once the connection is complete.

Using Your Miofive Dash Cam

LED Indicator Information

LED Indicator	Dash Cam Status
Green LED light blinks (1 sec)	Working, loop recording
Green LED light blinks (250 ms)	Emergency recording
Green LED light solid on	Stop recording, user operating
Red LED light blinks	Firmware updating
Red LED light blinks fast (0.5 sec) for 3 times	Low battery
Red LED light solid on	eMMC abnormal

Control Menu

By pressing the button on the right side of the LCD panel, you could enter the control menu.

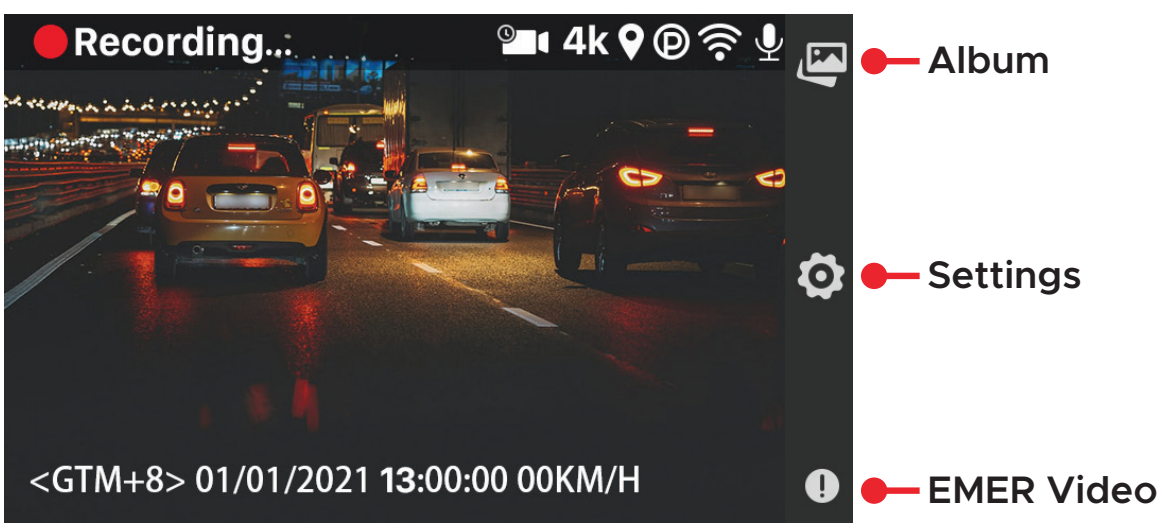

By pressing this button, the current video clip will be locked and stored in EMER Video.

Features

Note: Not all features are listed in this manual.

Parking Mode

When your car is not running, i.e. the engine is turned off, the Dash Cam will automatically power off in 10 seconds and enter Parking Mode. When a shock or crash is detected, the G-Sensor will activate the Dash Cam and start recording a 16-second and a 60-second video. The Dash Cam will then re-enter the Parking Mode.

Time Lapse

Time Lapse recording is a technique whereby the frequency at which file frames are captured (frame rate) is lower than that used when playing back the recording. Time Lapse recording can be considered the opposite of slow motion, as when the recording is played back time appears to be moving faster. This feature operates for up to 24 hours after the ignition is turn off.

Note: Use of this function requires a hardwire kit (NOT included) to provide a constant power supply.

Emergency Recordings

A 16-second video and a 60-second video will be captured when the G-Sensor is activated in case of sharp turns or a sudden stop. When the capacity of these videos reaches 30% of the eMMC space, the oldest ones will be overwritten by the new ones.

Travel Log

Travel Log Record the driving path of your journey. Your video and photo will store the GPS information and shows the geographic in your album. Your journey could be store in your personal account in the cloud.

Note: No personal data is collected. All GPS log data is stored anonymously in US Amazon Web Service.

Firmware/APP Update

APP Update

Once there is a new App version released, your mobile system and the App will send an update notification. Follow the prompts to update it.

Firmware Update

Firmware update can be achieved through OTA (Over The Air)

Open APP – connect to dash cam – Enter Settings - Firmware Update,

Then follow the prompt to upgrade.

Note: DO NOT power off the Dash Cam during the update. The Dash Cam will restart automatically after the firmware is successfully updated. Please contact us immediately if the update fails.

Troubleshooting

Scenario	Malfunction symptom	Root cause/Solution
Installation	Image blur	1. Make sure the lens protector is removed 2. The windshield might reflects, slightly adjust the camera angle to avoid reflection
	Day and night image quality differs a lot	Normally the window film's transparency rate is between 68%~80%, it will effect the recording result
	Power disconnect frequently	Due to different car models, please adjust the car charger angle to avoid loosing position

Start up	Unable to start	1. Make sure the car charger indicator light is on, if not please reinstall the car charger 2. The built-in battery might be low, please connect the USB cable to a power source 3. Press the power button for 4 secs to shut down. After shut down, press the power button to reboot
	Welcome screen stops, screen black out, button does not work	Press the power button for 4 secs to shut down. After shut down, press the power button to reboot
Recording	Did not start recording automatically after start up	1. Reboot the dash cam 2. Format built-in eMMC storage
	Stops recording abnormally	Format built-in eMMC storage
	LCD screen black out	If “LCD Auto-Off” is on, the camera will enter power saving mode if no operation been performed for 30 or 60 secs (default). The LCD screen will turn on again after pressing any button.

	No sound is recorded in the video	1. Check if the “Microphone” is Off in the Recording settings (The icon on the right upper LCD screen shows mute) 2. Turn the “Microphone” On in the “Recording settings”
	Video recorded is blur	1. Make sure the lens protector is removed 2. Make sure the windshield or camera lens is clean
	Video time stamp incorrect	1. Use the APP to connect the dash cam, the dash cam will perform auto time calibration once connected to the APP 2. Manually set the “Date and Time” under “System Settings”
Connecting to PC	Cannot find external storage	Please use an USB cable that support data transmission (The charging cable in the box does NOT supports data transmission)

APP connects via Wi-Fi	Cannot connect to dash cam	1. Make sure your phone Wi-Fi is turn on (For iOS user, select Miofive's Wi-Fi SSID under Wi-Fi settings) 2. Force close and restart the APP 3. Turn OFF the Mobile data. When your smartphone connects to your dash cam, it creates a new Wi-Fi network. In some iOS or Android versions, your camera may stop using that network if it doesn't detect internet — which your dash cam will not provide. Shutting down data or in some cases, turning on airplane mode and then turning on Wi-Fi will fix the issue of your camera not connecting to your dash cam.
	Cannot playback the recorded video on the mobile phone	Might be related to player or mobile phone's system, please try to playback on your PC
	Takes too long to connects	1. If there are too much Wi-Fi SSID nearby, the connection might failed due to signal interfered. Please use the dash cam in a less interfered environment 2. Mobile phone system might be overloaded, close the other APPs or reboot the phone

	Forget APP connection password	1. Default password is “1234567890” 2. Find your password under “Connect via Wi-Fi” 3. Restore to defaults under “System Settings”

Customer Service

18-month Limited Warranty

Life-time Support

E-mail: support@miofive.com

Specifications

CPU: Novatek processor

Wi-Fi: Wi-Fi 2.4/5GHz

G-Sensor: Built-in 3 axis accelerometer, motion locking, adjustable sensitivity

Storage: Built-in 64G eMMC high speed flash, loop recording

GPS: Built-in GPS

Camera: FOV 140˚, F1.8

Image Sensor: Sony IMX415

Image Resolution: 3840 x 2160

Screen: 2.2-inch IPS Display

Power Input: 5V / 2.4A

Built-in Battery Capacity: 500mAh

Operating Temperature: -10˚C~45˚C / 14˚F~113˚F

Weight: ~145g

Dimension: 116x60x55mm

Important Notices

Please read all precautions, cautions and instructions carefully before using this product to ensure proper and safe usage.

Precautions

Warning: Do not expose this product to rain, moisture or water under any circumstances, doing so may result in the risk of electric shock or fire.

CAUTION:

To reduce the risk of electric shock, do not perform any servicing other than that contained in the instruction manual unless you are qualified to do so. Have the unit serviced by a qualified service technician if;

The unit has been exposed to rain or water.

The unit does not seem to operate normally.

The unit exhibits a marked change in performance.

LCD:

A Liquid Crystal Display (LCD) screen is a multilayer complex component, containing 384,000 pixels. Pixels can however fail during normal product life. 1 pixel = 0.000026% failure rate, and one pixel failure per year of operation is considered normal and not a cause for concern.

Battery:

» Do not immerse or expose the Dash Cam or batteries to rain, water or other liquids.

» Do not leave the device exposed to a heat source or in a high-temperature location, such as in the sun or in an unattended vehicle. To prevent the possibility of damage, remove the Dash Cam from the vehicle or store it out of direct sunlight, such as in the glove box.

» Do not operate the Dash Cam outside of the following temperature range:

from -10˚ to 45˚C (from 14˚ to 113˚F).

» When storing the Dash Cam for an extended time period,

store within the following temperature range: from 0˚ to 25˚C (from 32˚ to 77˚F).

» Do not use a power and/or data cable that is not approved or supplied by Miofive.

» Contact your local waste disposal department to dispose of the Dash Cam/batteries in accordance with applicable local laws and regulations.

G Sensor:

The G Sensor within the Dash Cam measures forces exerted upon it, with reference to one g which is the nominal force exerted upon us when stationary on the earth's surface. The G Sensor will also trigger to protect any recording currently in progress, if a pre-determined threshold of force is exceeded. The G Sensor protection will be adversely affected if the Dash Cam is NOT mounted in the vertical direction i.e. with the lens pointing to or from the direction of travel. G Force information derived from a G Sensor is not warranted to be totally accurate at all times, as it is derived from the G Sensor through a sampling method over time. The precision of the G Sensor value recorded depends upon when the acceleration took place at the instance of the sample taken. The thresholds to trigger the video protection rely upon a trigger value being exceeded between two successive samples, in any one of the three G Sensor axis. If the Automatic G Sensor protection does NOT trigger during an event, then the EMER Video button should be pressed, in order to protect the file. Protecting the file can also be performed through the Miofive App for applicable Wi-Fi models.

GPS:

The lines Dataset/s have been simplified in order to reduce the number of track points required for detailed lines. Although every effort has been made to ensure the correctness and accuracy of the Dataset (Speed, Altitude, location etc), Miofive makes no representations, either express or implied, as to the accuracy, currency, completeness or suitability for any particular purpose of the information and accepts no liability for any use of the Dataset or any responsibility for any reliance

placed on that information. The user acknowledges that the Dataset cannot be guaranteed error free and that use of the Dataset is at the user's sole risk and that the information contained in the Dataset may be subject to change without notice.

Magnet Warnings:

The Dash Cam contains magnets. Under certain circumstances, magnets may cause interference with some internal medical devices, including pacemakers and insulin pumps. Devices that contain magnets should be kept away from such medical devices. Magnets may cause damage to some electronic devices, including hard drives in laptop computers and bank / credit or membership cards. Use caution when devices and mounts that contain magnets are near electronic devices or bank / credit or membership cards.

Windshield Mounting Legal Restriction:

Before using the Dash Cam on your windshield, check the state and local laws and ordinances where you drive. Some laws prohibit or restrict the placement of objects on the windshield of a motor vehicle. IT IS THE USER'S RESPONSIBILITY TO MOUNT THE DEVICE IN COMPLIANCE WITH ALL APPLICABLE LAWS AND ORDINANCES. Always mount your Miofive Dash Cam in a location that does not obstruct the driver's view of the road. Miofive does not assume any responsibility for any fines, penalties, or damages that may be incurred as a result of any state or local law or ordinance relating to the use of your Miofive Dash Cam.

Camera Legal Requirements:

In some jurisdictions it could be considered an invasion of privacy rights to take or publicly display photographs or videos of people or their vehicles using this product. It is your responsibility to know and comply with applicable laws and rights to privacy in your jurisdiction and in any jurisdiction in which you may use this device. Video recordings made by this Dash Cam should be for personal use only. Publication of the recordings on YouTube, the internet or other methods is subject to the data protection legislation and the requirements

thereof must be adhered to. Such data protection legislation may prohibit the use and dissemination by you of Dash Cam footage or may impose restrictions on it – we recommend that you check the legal requirements with your legal advisor before disseminating any Dash Cam footage. For use in a commercial environment, i.e. truck use, please refer and adhere to local regulations and requirements. Specific legal requirements may apply where Dash Cams are to be used in a commercial or employment context - again, we recommend that you check the legal requirements with your legal advisors prior to commencing use of Dash Cams in commercial or employment contexts.

CHOKING HAZARD:

Some Products may contain components that are small enough to be swallowed. Please keep out of reach of children.

Cautions

» Ensure that the windscreen is free of dirt or grease before placing mount upon it.

» Do not obscure the view of the road ahead or impede the deployment of any airbags in the event of an accident. Please install this product properly and do not block the driver's line of sight or the vehicle airbag to avoid product failure and personal injury.

» When installing the device in a vehicle, do not place the device where it obstructs the driver's view of the road or interferes with vehicle operating controls, such as the steering wheel, foot pedals, or transmission levers. Do not place unsecured on the vehicle dashboard. Do not place the device in front of or above any airbag.

This product is a vehicle accessory that records external video footage. The usage of this product does not guarantee the safe driving of users. We are not responsible for driving accidents and other losses that result from product failure, loss of data, or the operation of this product.

» Whilst driving, do not adjust the controls of your device as this is a distraction to driving.

» This device is intended to enhance the situational awareness when used properly. If used improperly, you could become distracted by the display, which could lead to an accident causing serious personal injury or death. DO NOT seek to access the information stored on the device or change the device settings whilst driving. Information stored on the device should be reviewed only when your vehicle is stationary, and you are parked in a safe place in compliance with local laws. The device settings should only be changed when your vehicle is stationary, and you are parked in a safe place in compliance with local laws. Always maintain awareness of your surroundings and do not stare at the display or become distracted by the display. Focusing on the display could cause you to miss obstacles or hazards. Use the device at your own risk.

» Video playback upon devices with display which are visible to the driver, is prohibited or restricted in some countries or States. Please adhere to these laws.

» The video recordings made by this Dash Cam are intended for personal use only.

» Publication of the recordings on Youtube, the internet or other methods are subject to the Data Protection Act and the requirements thereof must be adhered to. If the Dash Cam is to be used within a commercial environment, i.e. truck use, then the CCTV regulation apply also, in addition to the Protection Act regulations. This includes labelling to identify the use of CCTV is taking place, the omission of Audio recording and informing the relevant authorities of who controls the data.

» Before using the device on your windscreen, check the state and local laws and ordinances where you drive. Some laws prohibit or restrict the placement of objects on the windscreen of a motor vehicle. IT IS THE USER'S RESPONSIBILITY TO MOUNT THE DEVICE IN COMPLIANCE WITH ALL APPLICABLE LAWS AND ORDINANCES. Always mount your Miofive device in a location that does not obstruct the driver's view of the road. Miofive does not assume any responsibility for any fines, penalties, or damages of your Miofive device. Miofive accepts no responsibility for any damage or injury caused when the

dash cam is in use.

» Certain functions of this product may not work properly due to differences in vehicle conditions, driving style, and driving environment. Power disconnection, usage outside of normal temperature and humidity, impact, and memory card damage may cause this product to malfunction. We do not guarantee normal operation under all circumstances.

» Please use the car charger and USB cable that comes with this device to avoid compatibility issues. Miofive is not responsible for any loss caused by the use of non-standard car chargers and USB cables. When not in use, please disconnect the car adaptor from both the 12/24Vdc outlet in your vehicle and the device itself.

» Lithium-ion batteries are used in most Miofive devices. If these guidelines are not followed, batteries may experience a shortened life span or may present a risk of damage to the device, fire, chemical burn, electrolyte leak, and/or injury.

- Do not disassemble, modify, remanufacture, puncture, or damage the device or batteries.

- Do not remove or attempt to remove the non-user replaceable battery.

- Do not expose the device to fire, explosion, or other hazard.

- Do not expose the device to rain or water.

» If the battery is deformed, swelling, or leaking, stop using the product immediately and contact customer service.

» Keep this product away from strong magnetic fields, which may cause damage to the product.

» Only clean the device with a soft dry cloth, for tough dirt, apply some neutral detergent diluted in 5 to 6 parts water to a soft cloth. Please note that alcohol, thinner, benzene etc could cause damage to the paint or coatings.

» Avoid making contact with the lenses as damage may be caused. If required clean the glass lens carefully using spectacle lens cleaning fluid on a soft cloth only.

» Please use this product to the extent permitted by law.

» Keep the product at least 20cm away from the driver and passengers.

» The built-in eMMC should be formatted via APP or PC regularly to maximize the lifetime of the memory card.

» Do not attempt to repair, dismantle, or modify the dash cam hardware by yourself.

» Do not install the product in an environment with high humidity, or combustible gasses or liquids.

» Drawings for illustration purpose only. Actual product may vary due to product enhancement.

» Avoid leaving the device in direct sunlight for extended periods of time.

Disposal of your Miofive dashcam

1. All electrical and electronic products should be disposed of separately from the municipal waste stream via designated collection facilities appointed by the government or the local authorities. Contact local authorities to learn about disposal and recycling options available in your area.

2. The correct disposal of your Miofive dashcam will help prevent potential negative consequences for the environment and human health.

3. For more detailed information about disposal of your Miofive dashcam, please contact your city office, waste disposal service or the shop where you purchased the product.

5150-5250MHZ can be use indoor only.

FCC STATEMENT

This device complies with Part 15 of the FCC Rules. Operation is subject to the following two conditions:

1. This device may not cause harmful interference, and

2. This device must accept any interference received, including interference that may cause undesired operation.

Warning: Changes or modifications not expressly approved by the party responsible for compliance could void the user's authority to operate the equipment.

Note: This equipment has been tested and found to comply with the limits for a Class B digital device, pursuant to Part 15 of the FCC Rules. These limits are designed to provide reasonable protection against harmful interference in a residential installation. This equipment generates uses and can radiate radio frequency energy and, if not installed and used in accordance with the instructions, may cause harmful interference to radio communications. However, there is no guarantee that interference will not occur in a particular installation. If this equipment does cause harmful interference to radio or television reception, which can be determined by turning the equipment off and on, the user is encouraged to try to correct the interference by one or more of the following measures:

» Reorient or relocate the receiving antenna.

» Increase the separation between the equipment & receiver.

» Connect the equipment into an outlet on a circuit different from that to which the receiver is connected.

» Consult the dealer or an experienced radio/TV technician for help.

FCC Radiation Exposure Statement

This equipment complies with FCC radiation exposure limits set forth for an uncontrolled environment. This equipment should be installed and operated with minimum distance 20cm between the radiator & your body.

Miofive

MF02 To view an electronic label

1. Click the settings button

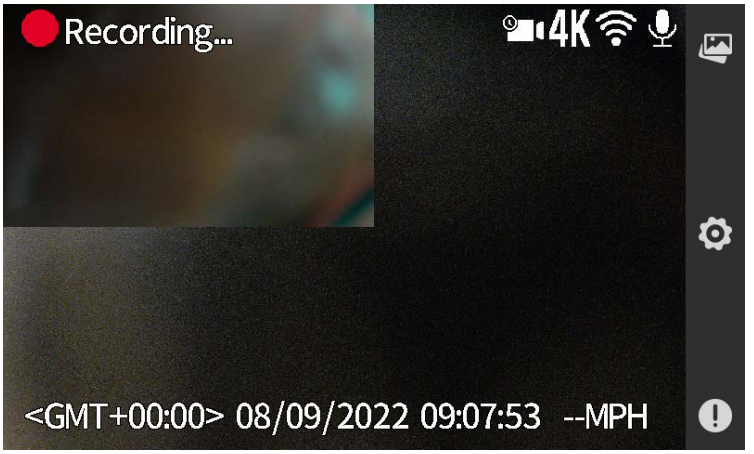

2.Check about this machine

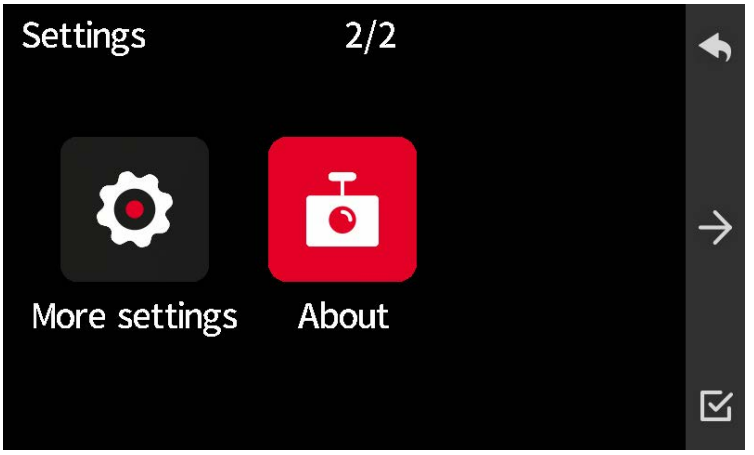

3. Select Legal & Regulatory

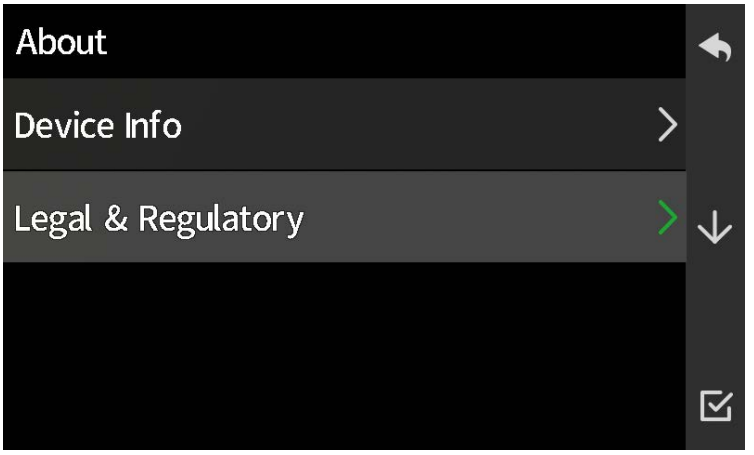

Pop up electronic label

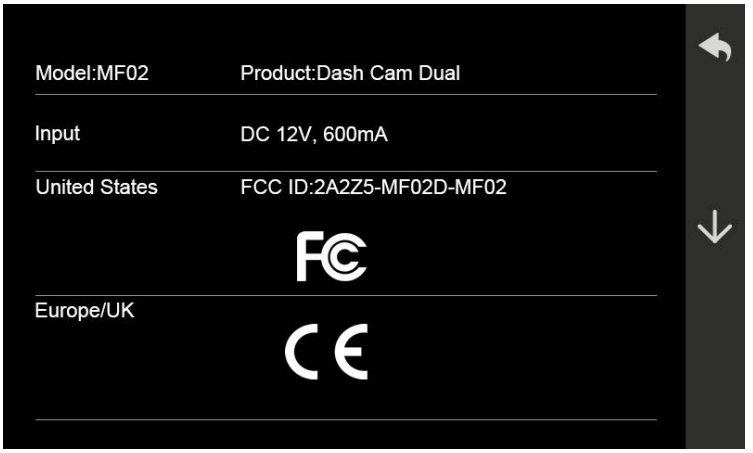

4. Click next

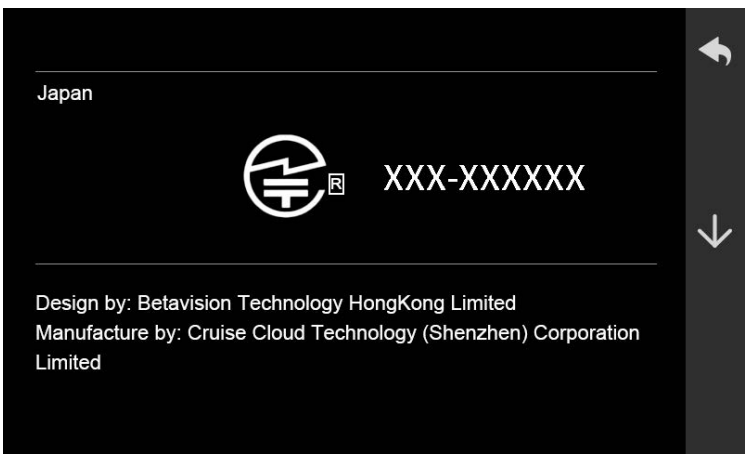

MIOFIVE

www.miofive.com