Positive Grid®

Visit our online Help Center for user manuals, FAQs, or to contact our support team: help.positivegrid.com

@positivegrid

positivegrid.com

Product code

Positive Grid®

Welcome to Spark LIVE.
Check out this guide to set up your all-in-one gigging amp.

Spark LIVE

QUICK START GUIDE

WHAT'S IN THE BOX?

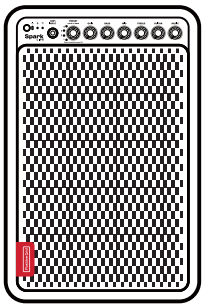

Spark LIVE

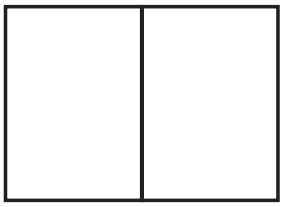

Quick Start Guide

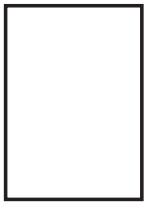

Safety Instructions

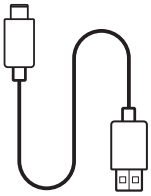

USB-C® to
USB-A Cable

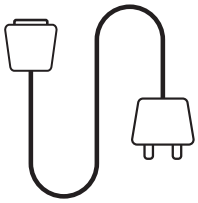

AC Power Cord

Get Started

Pairing Spark LIVE and the Spark app

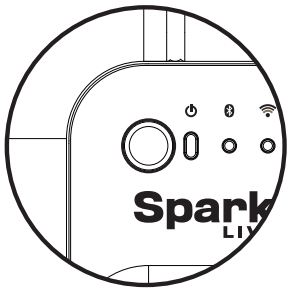

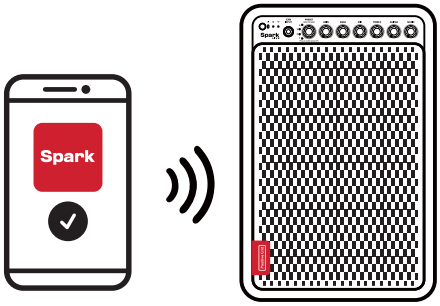

- Download the Spark app using the QR code above or search for “Spark amp" in the App Store or Google Play Store.
- Turn on Spark LIVE by holding the Power button.
- Open the Spark app on your mobile device and in the app, tap the connect button, the Spark app will search for your Spark LIVE. Select yours from the list to connect.

Update Spark LIVE Firmware

- It’s important that you update Spark LIVE to the latest firmware. Spark LIVE can be easily connected to your Wi-Fi network, allowing you to receive official firmware updates directly from Positive Grid. These updates frequently introduce new gear, features, and optimizations, all designed to make your jam sessions better than ever before.

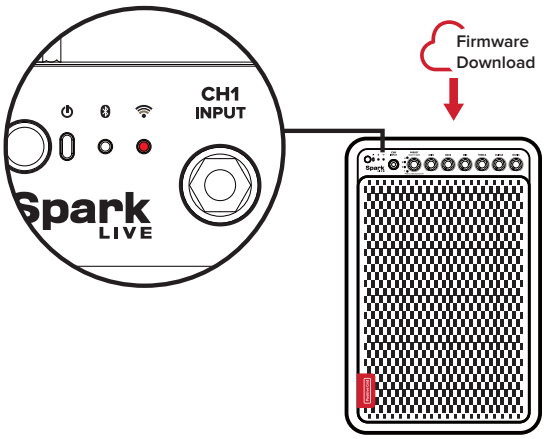

To select an input channel

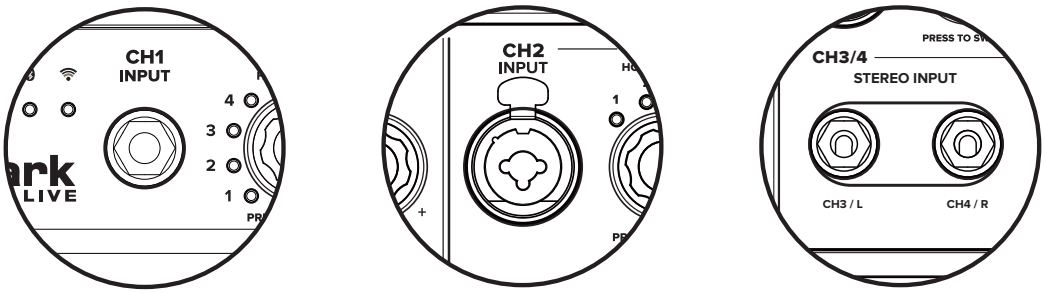

- Each input channel supports 3 to 4 different modes. The factory default settings for the 1/4" jack sockets of CH1, CH2, and CH3/4 are for general guitar or bass. The XLR socket for CH2 is for a dynamic microphone.
- More input mode options can be found in the settings of the Spark app and are detailed on page 5 and 7.

To select a preset

- Select presets for CH1 and CH2 by turning the Preset Knob.
- Each channel has 8 default presets. Press the Preset Knob to switch between the 4 red and 4 green presets.
- You can see a list of the default presets for each channel on page 16

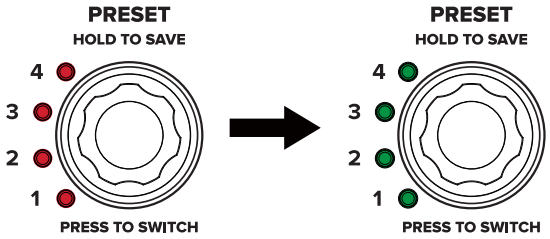

Front Panel

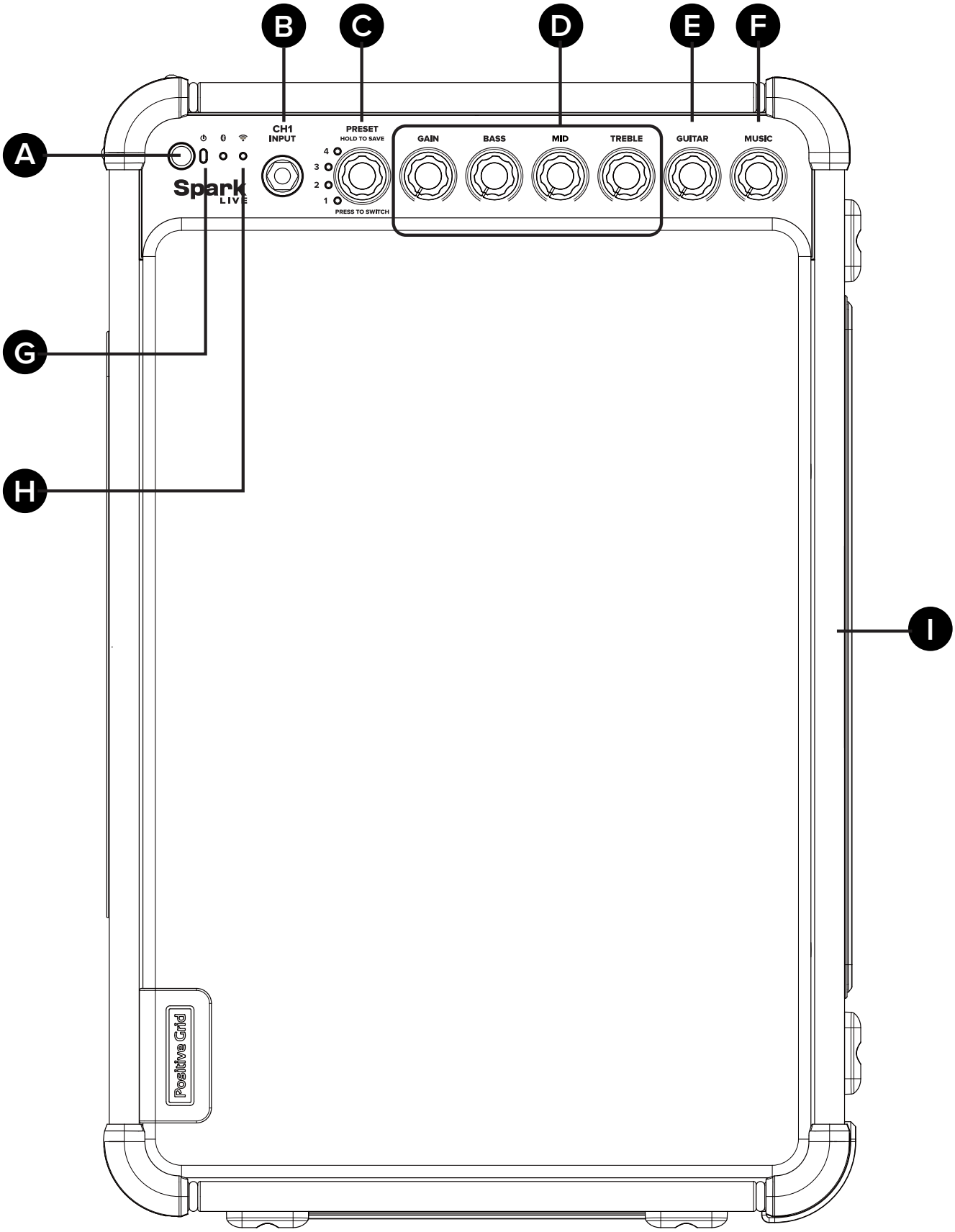
A
B
C
D
E
F
G
H
I
CH1
INPUT
PRESET
HOLD TO SAVE
4
3
2
1
PRESS TO SWITCH
GAIN
BASS
MID
TREBLE
GUITAR
MUSIC
Spark
LIVE
Positive Grid

A - Power Switch
Hold to turn on/off Spark LIVE.

B - Input Channel 1 (1/4")
CH1 supports 3 modes:

- **Standard Instrument Mode (Factory Default)**
  For general electric guitars, acoustic guitars, or basses
- Hi-Z Instrument Mode
  For electric guitars or basses that have high gain/output pickups or a built-in preamp
- Line In Mode
  For instruments with an output line level signal, such as keyboards, DI boxes or a line output from an external effects unit

C - Preset Selector for Channel 1
Customize up to 8 presets for CH1. Use the knob to switch between presets, and press the knob to choose between the 4 red and 4 green presets.
See page 16 for more details on the default presets and how to customize them.

D - Amp Control
Controls the gain and EQ of the amp model in the current preset.

E - Channel 1 Volume Control
Controls the overall volume of CH1.

F - Music Volume Control
Controls the volume of Bluetooth music playback and USB audio.

G - Power Indicator
Indicates power and battery status.

Without Battery Loaded:
- Solid Red: Powered on

With Battery Loaded:
- Solid Green: Powered on / Battery 50-100%
- Solid Yellow: Powered on / Battery 10-50%
- Solid Orange: Powered on / Battery under 10%
- Flashing Green/Yellow/Orange: Charging

H - Wireless Indicators
Indicates the status of the Bluetooth and Wi-Fi connection.

- Solid Blue/Green: Connected
- Flashing Blue/Green: Pairing

I - Speaker Stand Mount
Spark LIVE can be mounted on any 35mm standard speaker stand.

Rear Panel

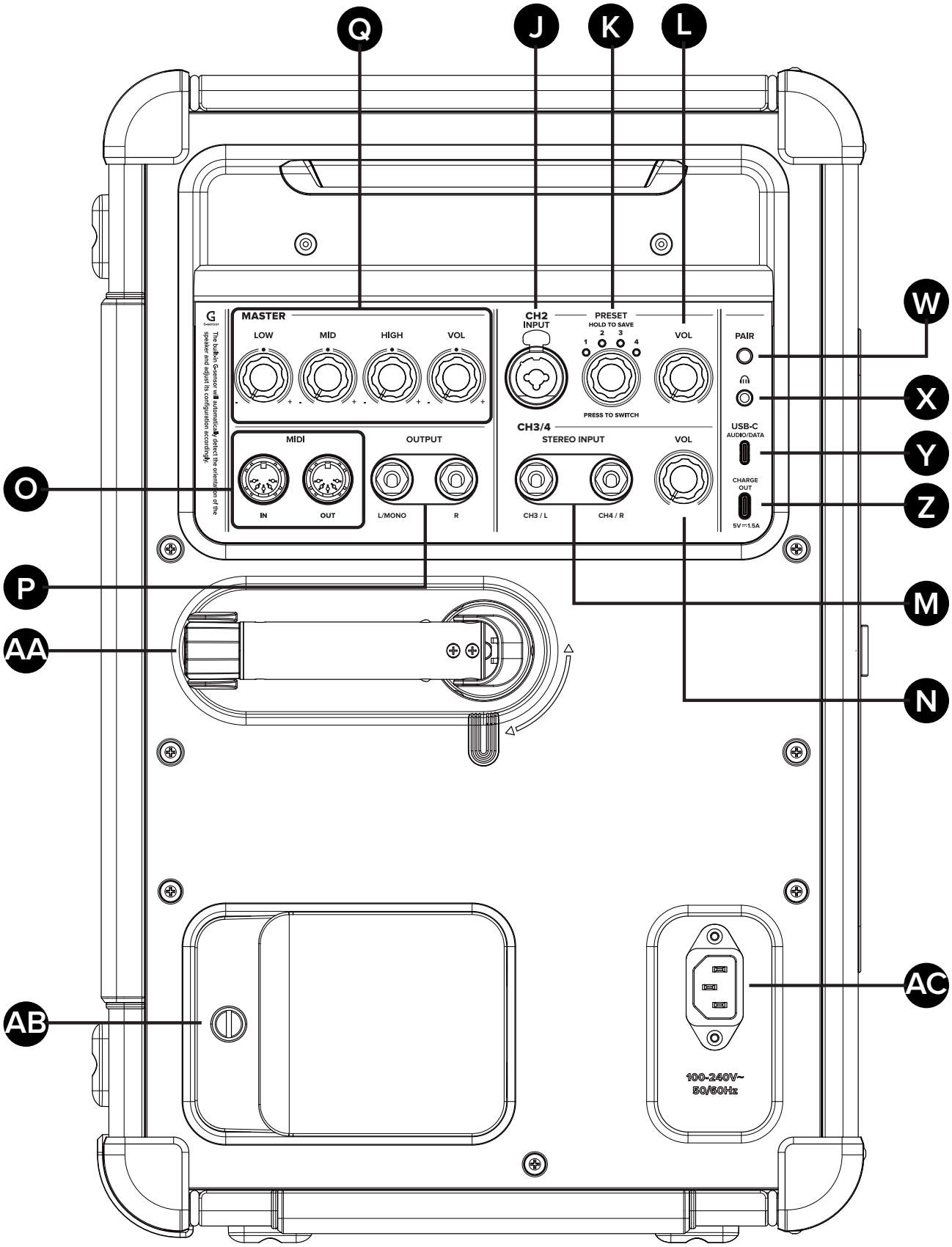
Q
J
K
L
W
X
Y
Z
O
P
AA
M
N
AC
AB
MASTER
LOW
MID
HIGH
VOL
G-sensor
The built-in G-sensor will automatically detect the orientation of the speaker and adjust its configuration accordingly.
MIDI
IN
OUT
OUTPUT
L/MONO
R
CH2
INPUT
PRESET
HOLD TO SAVE
1
2
3
4
PRESS TO SWITCH
VOL
CH3/4
STEREO INPUT
CH3 / L
CH4 / R
VOL
PAIR
USB-C
AUDIO/DATA
CHARGE
OUT
5V ⎓1.5A
100-240V~
50/60Hz

J - Input Channel 2 (XLR / 1/4" Combo)

CH2 features a combo socket that supports both standard XLR or 1/4" TS line inputs. Each port supports multiple modes:

XLR

- **Microphone Mode (Factory Default)**
  For standard dynamic microphones
- Line In Mode
  For instruments with an output line level signal, such as keyboards, DI boxes or a line output from an external effects unit

1/4" TS

- **Standard Instrument Mode (Factory Default)**
  For general electric guitars, acoustic guitars, or basses
- Hi-Z Instrument Mode
  For electric guitars or basses that have high gain/output pickups or a built-in preamp
- Line In Mode
  For instruments with an output line level signal, such as keyboards, DI boxes or a line output from an external effects unit

K - Preset Selector for Channel 2

Customize up to 8 presets for CH2. Use the knob to switch between presets, and press the knob to choose between the 4 red and 4 green presets.

L - Channel 2 Volume Control

Controls the overall volume of CH2.

M - Input Channel 3/4 (1/4")

CH3/4 has 1 pair of 1/4" sockets. You can connect either a stereo output or 2 mono outputs. Please note that the CH3/4 does not support built-in effects.

CH3/4 support multiple modes :

- **Standard Instrument Mode (Factory Default)**
  For general electric guitars, acoustic guitars, or basses.
- Hi-Z Instrument Mode
  For electric guitars or basses that have high gain/output pickups or a built-in preamp.
- Line In Mode
  For instruments with an output line level signal, such as keyboards, DI boxes or a line output from an external effects unit.

N - Channel 3/4 Volume Control

Controls the overall volume of CH3/4. Please note that this knob controls the volume of both channels simultaneously and cannot be adjusted separately.

O - MIDI Ports (Standard 5 Pin DIN)

Input - Connect a wired MIDI controller to control built-in effects and other features.

Output - Connect to another Spark LIVE to sync them.

P - Line Output (1/4")

Connect to the input of an external device, such as a PA system, audio interface, etc.

If you only need 1 output, please use the L/Mono output.

Q - Master EQ/Volume

Adjust the overall EQ and volume of Spark LIVE.

W - Pair Button

Press to enter Bluetooth® pairing mode when connecting to a new device.
Hold to enter pairing mode when connecting to Spark Control X.

X - Headphone Output (1/8")

Plug in a pair of headphones with a 1/8" jack.

Y - USB Audio Port (USB-C®)

Connect the supplied USB-C® to USB-A cable to a PC/Mac to use as an audio interface.

Z - Charge Out Port (USB-C®)

Connect a mobile device to charge it. To preserve battery life, we recommend charging mobile devices when Spark LIVE is powered by AC.

AA - Tilt Stand

Use the stand to position Spark LIVE at different angles and orientations.

AB - Battery Slot

Insert the Spark Battery here (sold separately).

AC - Power Input (IEC)

Connect the supplied Power Cord to a power outlet.

To play music via Bluetooth

- To connect to Spark LIVE for the first time, turn Bluetooth® on in the settings of your mobile device, and select “Spark LIVE Audio" from the list of scanned devices.

- To pair a new device, press the Pair button on the Rear Panel of Spark LIVE, turn Bluetooth® on in the settings of your mobile device, and select “Spark LIVE Audio" from the list of scanned devices.

- Spark LIVE will automatically pair with the last device it connected to. If the last device is not available, Spark LIVE will automatically connect to a device that has been previously paired.

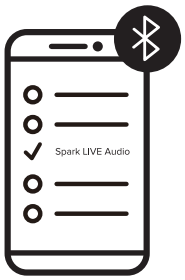

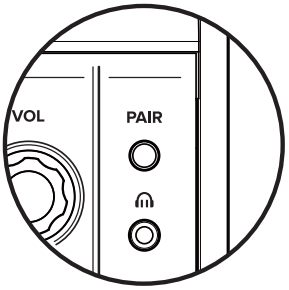

Using The Tilt Stand

Horizontal position.

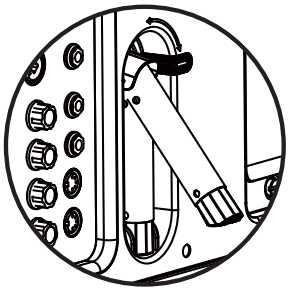

- Put out the tilt stand.
- Gently lay Spark LIVE down to prevent any damage.

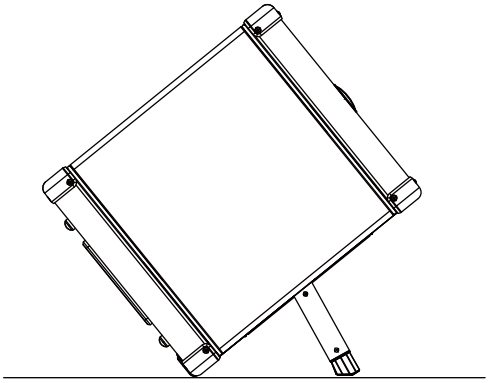

Vertical position.

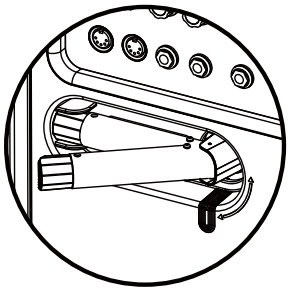

- Put out the tilt stand.

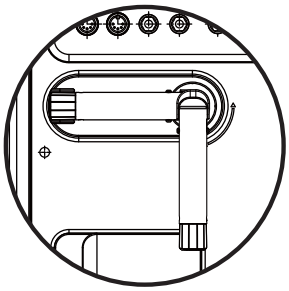

- Rotate 90 degrees in the direction of the arrow.

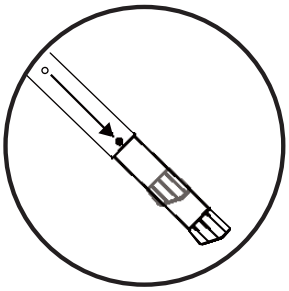

- Extend the stand by pressing the side buttons near the base at the same time and pulling out.

- The stand can be adjusted and placed in 2 different angles.
- Gently lay Spark LIVE down to prevent any damage.

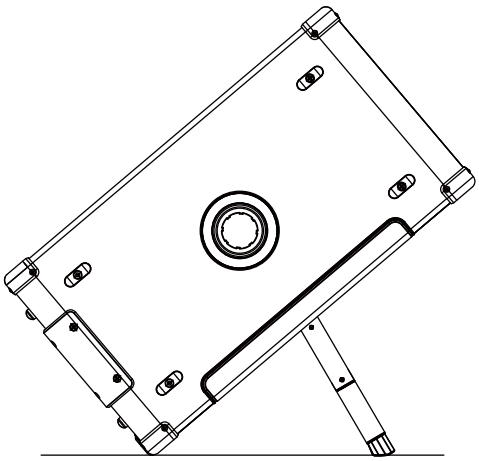

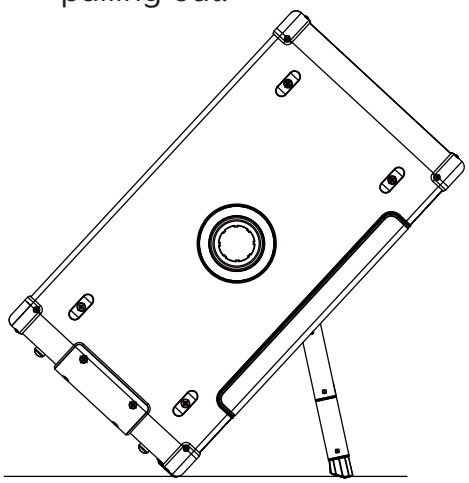

G-Sensor

The built-in G-sensor will automatically detect the orientation of the speaker and adjust its configuration for optimum sound.

There are 2 modes that are dictated by the orientation of Spark LIVE:

- **Wide Mode (Stereo) :**
  When Spark LIVE is placed horizontally, it will trigger stereo mode. This mode is recommended if panning between the left and right output channels is required.

- **Loud Mode (Mono) :**
  When Spark LIVE is placed vertically, it will trigger mono mode. This mode is recommended if a more focused, direct sound is required.

- **Loud Mode (Mono)**

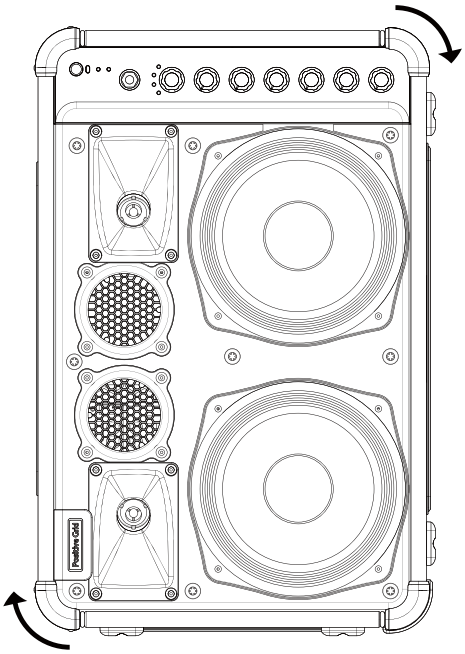

- **Wide Mode (Stereo)**

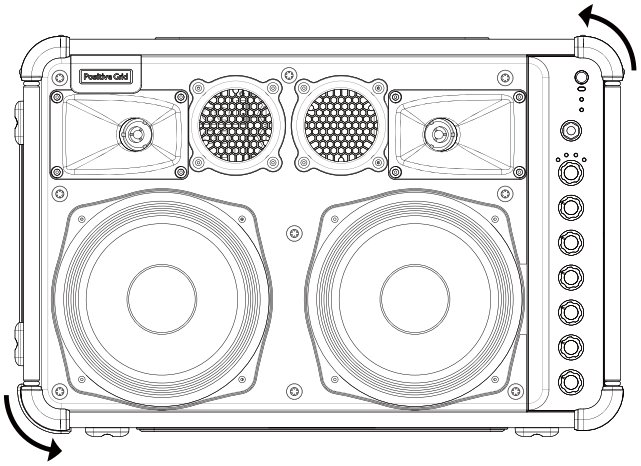

Mounting Spark LIVE on a Speaker Stand

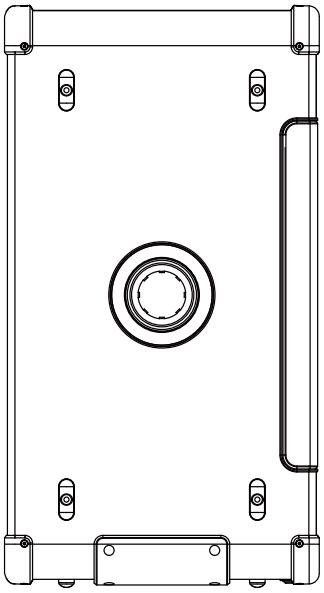

- Spark LIVE includes a port on the side for mounting on a speaker stand. It will fit any standard 35mm stand.
- Please also make sure the speaker stand can support a speaker with a minimum weight of 13kg and an overall size of 456 x 241 x 298mm.

Installing Battery

Spark LIVE is only compatible with Spark Battery (sold separately). Spark Battery has up to 8 hours of play time and automatically starts charging when Spark LIVE is plugged in via AC.
Please be aware that using a third party battery can damage your Spark LIVE.

- Make sure Spark LIVE is off and unplug the power cord.
- Loosen the screw next to the battery cover and lift it up.
- Insert Spark Battery with the sticker facing outward.
- Put back the cover and tighten the screw.
- You can now turn on Spark LIVE using battery power.

***Do not remove or install Spark Battery while Spark LIVE is powered on.**

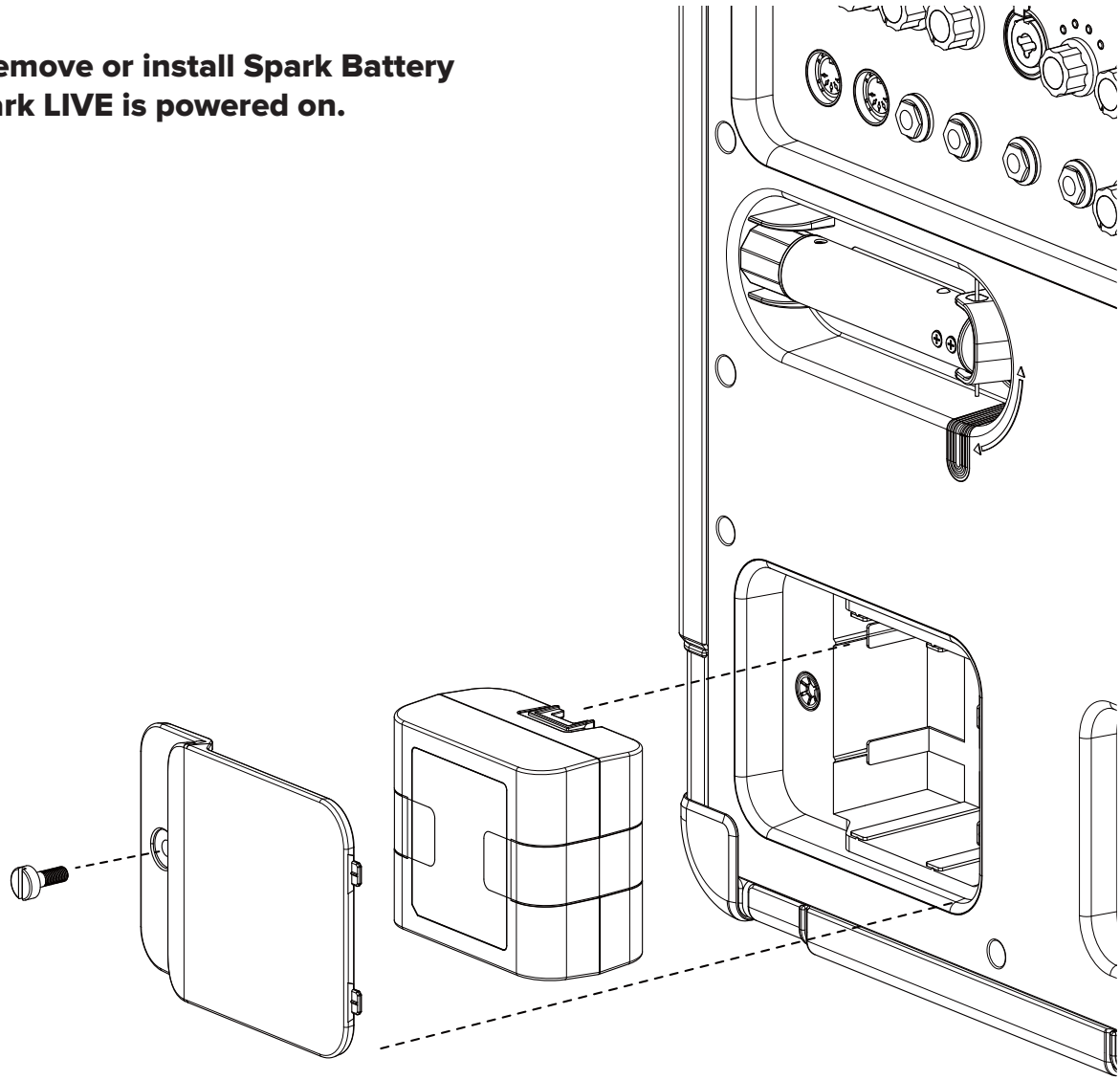

Pairing With A Spark Control X

Step1. Turn on the Spark LIVE.

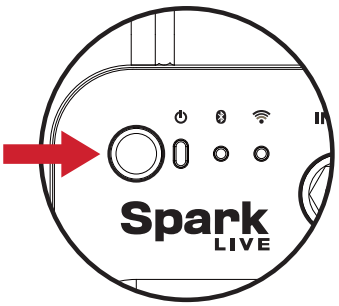

Step2. Long press the Pair Button on the Rear Panel until both Wireless Indicator LEDs on the Front Panel light up blue.

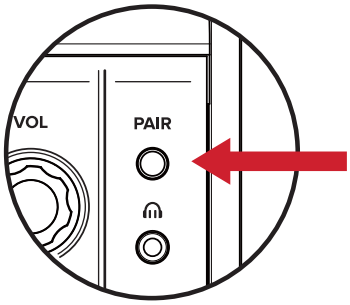

Step3. Press the pair button on Spark Control X.

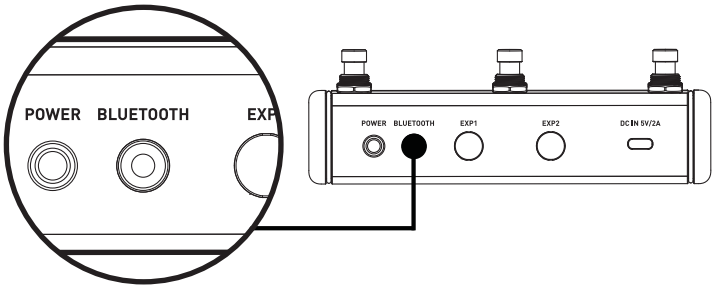

Step4. Spark LIVE will automatically connect to the Spark Control X.

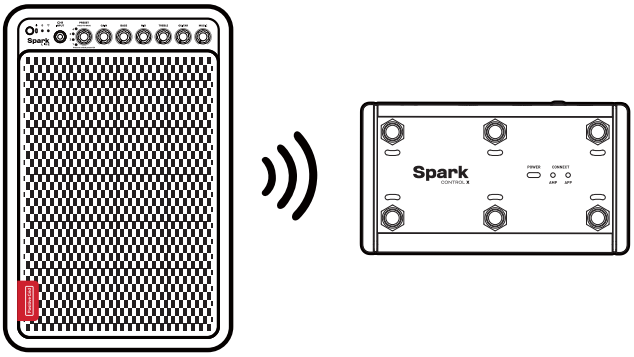

Using the Looper

Before using the Looper, ensure you're connected to the Spark app or Spark Control.

Using the Looper with the Spark app:

- Connect Spark LIVE to the Spark App.
- Tap on the Music Page tab.
- Select the Looper and follow the on-screen directions.

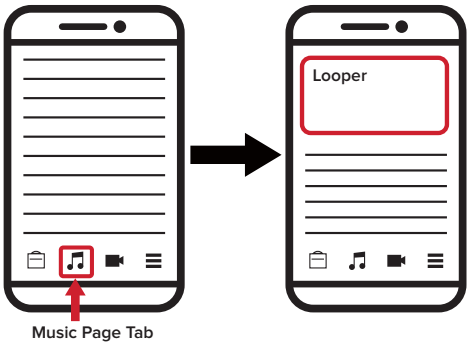

Using the Looper with Spark Control:

- Connect Spark LIVE to Spark Control or Spark Control X.
- Long press Footswitch 1 on Spark Control X or the footswitch assigned to enter/exit looper mode on Spark Control.

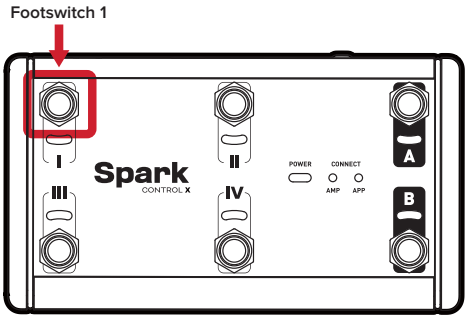

Factory Default Settings

Default Built-in Presets

CH1

- Red Preset 1 : Rhythm Guitar Style Tone 1
- Red Preset 2 : Lead Guitar Style Tone 1
- Red Preset 3 : Solo Guitar Style Tone 1
- Red Preset 4 : Ambient Guitar Style Tone 1
- Green Preset 1 : Rhythm Guitar Style Tone 2
- Green Preset 2 : Lead Guitar Style Tone 2
- Green Preset 3 : Solo Guitar Style Tone 2
- Green Preset 4 : Ambient Guitar Style Tone 2

CH2

- Red Preset 1 : Vocal - Lead
- Red Preset 2 : Vocal - Studio Echo
- Red Preset 3 : Vocal - Chorus
- Red Preset 4 : Vocal - Lofi
- Green Preset 1 : Acoustic Guitar - Modern Crisp Tone
- Green Preset 2 : Acoustic Guitar - Warm Woody Tone
- Green Preset 3 : Bass - Clean and Bright
- Green Preset 4 : Bass - Overdriven Bass

More presets can be downloaded and customized for free on ToneCloud. You can access ToneCloud via the Spark app, search for a custom preset, download it for free, and then save the preset directly to Spark LIVE by tapping ‘Save to hardware preset’ in the menu.

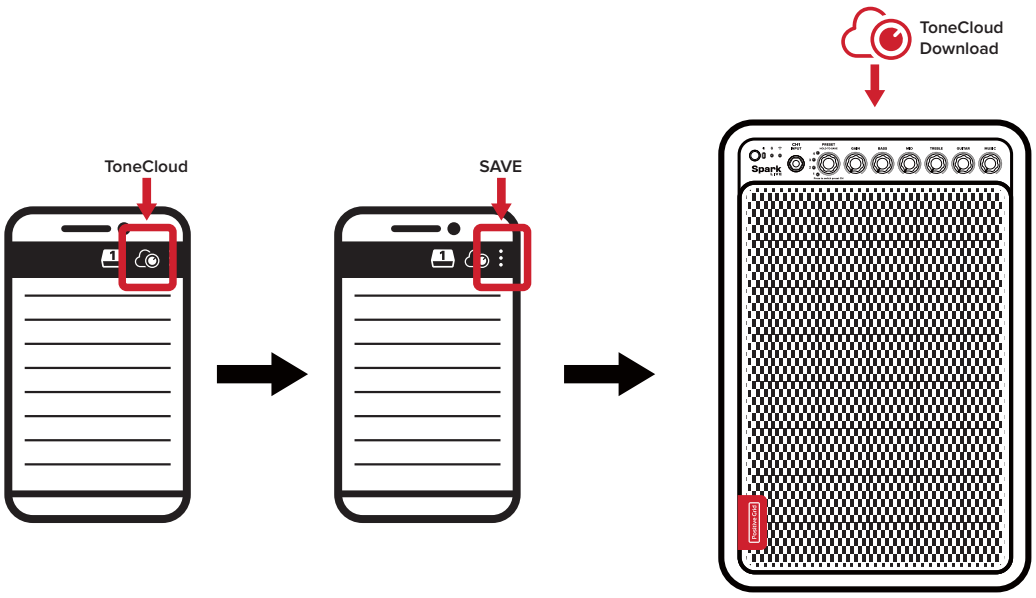

● CQC

注意事项：

1.勿在本机顶部或电源线上放置重物。
2.仔细阅读操作说明避免误操作。
3.设备不应遭受水滴或水溅，设备上不应放置诸如花瓶一类的装满液液体的物品，否则水等液体的不小心洒泼可能会损坏机器。
4.本产品断开装置是器具耦合器，应当保持可方便的操作。
5.电池（电池包或组合电池）不得暴露在诸如日照，火烤或类似过热环境中。
6.设备应当连接到带保护接地连接的电网电源输出插座上。

该产品銘牌标示在背部脚支架正下方

● CB

Max Operating temperature: 45°C

● NCC

警語：

取得審驗證明之低功率射頻器材，非經核准，公司、商號或使用者均不得擅自變更頻率、加大功率或變更原計之特性及功能。低功率射頻器材之使用不得影響飛航安全及干擾合法通信；經發現有干擾現象時，應立即停用，並改善至無干擾時方得繼續使用。前述合法通信，指依電信管理法規定作業之無線電通信。低功率射頻器材須忍受合法通信或工業、科學及醫療用電波輻射性電機設備之干擾。

● NBTC

"เครื่องโทรคมนาคมและอุปกรณ์นี้มีความสอดคล้องตามมาตรฐานหรือข้อกำหนดทางเทคนิคของกสทช."

● IMDA

Complies with
IMDA Standards
DB106232

● WEEE

● TRIMAN

● FCC

This equipment has been tested and found to comply with the limits for a Class B digital device, pursuant to part 15 of the FCC Rules. These limits are designed to provide reasonable protection against harmful interference in a residential installation. This equipment generates uses and can radiate radio frequency energy and, if not installed and used in accordance with the instructions, may cause harmful interference to radio communications. However, there is no guarantee that interference will not occur in a particular installation. If this equipment does cause harmful interference to radio or television reception, which can be determined by turning the equipment off and on, the user is encouraged to try to correct

- Reorient or relocate the receiving antenna.
- Increase the separation between the equipment and receiver.
- Connect the equipment into an outlet on a circuit different from that to which the receiver is connected.
- Consult the dealer or an experienced radio/TV technician for help.

This device complies with part 15 of the FCC Rules. Operation is subject to the following two conditions: (1) This device may not cause harmful interference, and (2) this device must accept any interference received, including interference that may cause undesired operation.

Caution: FCC/IC Radiation Exposure Statement
This equipment complies with FCC and IC RSS-102 radiation exposure limits set forth for an uncontrolled environment. This equipment should be installed and operated with a minimum distance of 20cm between the radiator and any part of your body. This transmitter must not be co-located or operating in conjunction with any other antenna or transmitter.
Pour se conformer aux exigences de conformité CNR 102 RF exposition, une distance de séparation d'au moins 20 cm doit être maintenue entre l'antenne de cet appareil ettoutes les personnes. Cet émetteur ne doit pas être Co-placé ou ne fonctionnant en même temps qu'aucune autre antenne ou émetteur.

Caution!
Any changes or modifications not expressly approved by the party responsible for compliance could void the user's authority to operate the equipment.

● IC

This device contains licence-exempt transmitter(s)/receiver(s) that comply with Innovation, Science and Economic Development Canada's licence-exempt RSS(s). Operation is subject to the following two conditions:
(1) This device may not cause interference.
(2) This device must accept any interference, including interference that may cause undesired operation of the device.
Lémetteur/récepteur exempt de licence contenu dans le présent appareil est conforme aux CNR d'Innovation, Sciences et Développement économique Canada applicables aux appareils radio exempts de licence. L'exploitation est autorisée aux deux conditions suivantes :
1.L'appareil ne doit pas produire de brouillage;
2.L'appareil doit accepter tout brouillage radioélectrique subi, mêmesile brouillage est susceptible d'en compromettre le fonctionnement.
This class [B] digital apparatus complies with Canadian ICES-003.
CAN ICES-003 (B) / NMB-003 (B)
Ce produit de classe [B] est conforme aux spécifications de la réglementation ICES-003 du Canada. CAN ICES-003 (B) / NMB-003 (B)

Product code

進口商/进口商 &製造商：佳格数位科技有限公司 /佳格數位科技有限公司
地址：台北市中山區長春路176號11樓/台北市中山区长春路176号11楼
TEL:886-2-25025250

Declarations of Conformity

● RoHS

設備名稱Equipment name：吉他音箱
型號（型式）Type designation (Type)：Spark LIVE

R3D776
RoHS

單元Unit	限用物質及其化學符號 Restricted substances and its chemical symbols					
	鉛Lead (Pb)	汞Mercury (Hg)	鎘Cadmium (Cd)	六價鉻 Hexavalent chromium (Cr^{+6})	多溴聯苯 Polybrominated biphenyls (PBB)	多溴二苯醚 Polybrominated diphenyl ethers (PBDE)
揚聲器	O	O	O	O	O	O
電路板	–	O	O	O	O	O
結構件	–	O	O	O	O	O
線材	O	O	O	O	O	O
電池	O	O	O	O	O	O
配件	O	O	O	O	O	O

備考1.〝超出0.1 wt %〞及〝超出0.01 wt %〞係指限用物質之百分比含量超出百分比含量基準值。
備考2.〝o〞係指該項限用物質之百分比含量未超出百分比含量基準值。
備考3.〝-〞係指該項限用物質為排除項目。

Note 1: "Exceeding 0.1 wt %" and "exceeding 0.01 wt %" indicate that the percentage content of the restricted substance exceeds the reference percentage value of presencecondition.
Note 2: "○" indicates that the percentage content of the restricted substance does not exceed the percentage of reference value of presence.
Note 3: The "-" indicates that the restricted substance corresponds to the exemption.

有毒有害物质或元素的说明
Indication of Toxic and Hazardous Substances/Elements

部件名称 Part name	产品中有害物质或元素的名称及含量 Toxic and Hazardous Substances/Elements					
	铅 (Pb)	汞 (Hg)	镉 (Cd)	六价铬 (Cr(VI))	多溴联苯 (PBB)	多溴二苯醚 (PBDE)
扬声器 (Speaker)	O	O	O	O	O	O
电路板 (PCBA)	X	O	O	O	O	O
结构件 (Structural parts)	X	O	O	O	O	O
线材 (Cable)	O	O	O	O	O	O
电池 (battery)	O	O	O	O	O	O
附件 (accessory)	O	O	O	O	O	O

本表格依据 SJ/T 11364 的规定编制
O:表示该有毒有害物质在该部件所有均质材料中的含量均在GB/T 26572规定的限量要求以下
X:表示该有毒有害物质至少在该部件的某一均质材料中的含量超出GB/T 26572规定的限量要求

在中华人民共和国境内销售的电子电气产品上将印有“环保使用期”(EFuP)符号。圆圈中的数字代表产品的正常环保使用年限。

● BATTERIES

A warning that batteries (battery pack or batteries installed) shall not be exposed to excessive heat such as sunshine, fire or the light.

1) Replacement of a battery with an incorrect type that can defeat a safeguard;

2) Disposal of a battery into fire or a hot oven, or mechanically crushing or cutting of a battery, that can result in an explosion;

3) Leaving a battery, in an extremely high temperature surrounding environment that can result in an explosion or the leakage of flammable liquid or gas;

4) A battery subjected to extremely low air pressure that may result in an explosion or the leakage of flammable liquid or gas.

Battery Capacity：14.4V 6000mAh 86.4Wh,
Type: Rechargeable Li-ion Battery

●

적합등록번호: R-R-sDI-SparkLIVE
기자재명칭: Guitar Amp & Bluetooth Speaker
모델명: SparkLIVE
제조자: Positive Grid Limited, 제조국: 중국
상호: 삼아디엔아이(주), 서비스센터: 02-734-0653
제조년월: 별도표기

안전확인신고번호: YU10251-20021
제품명: 전지
모델명: Spark Battery
정격: 14.4Vdc 6000mAh
제조업체: Guangdong Pow-Tech New Power Co.,Ltd.
제조국: 중국

주의사항
1.고장시 임의로 분해하지 마시고 서비스센터로 연락하십시오
2.통풍이 잘되는곳에서 사용하십시오
3.습기 및 수분이 많은 장소에서는 사용을 금합니다

Positive Grid®

Visit our online Help Center for user manuals, FAQs, or to contact our support team: help.positivegrid.com