FAVE
Smart Balance Trainer

FAVE ALLFIT

User's Guide

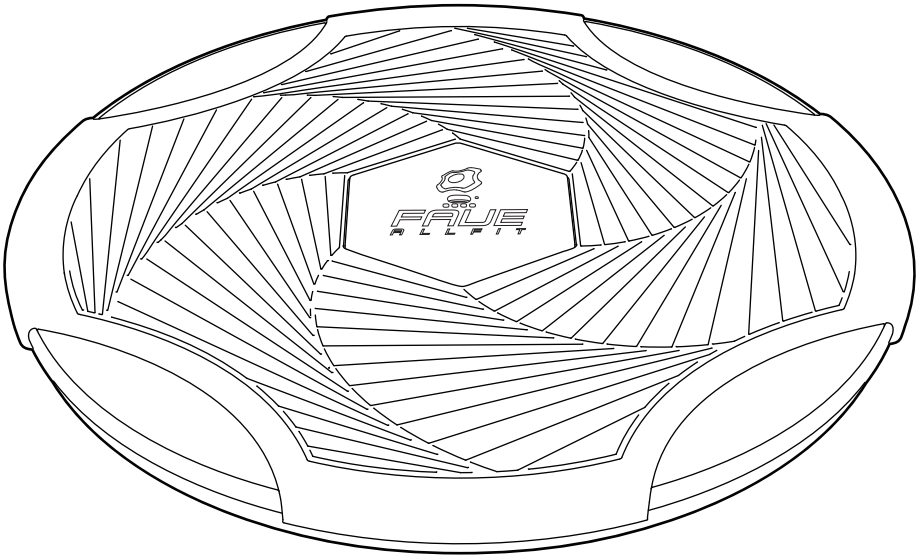

Be sure to read this manual before using it and use the product safely.
You can find more information on the STRONG FRIENDS website (www.strongfriends.co.kr).

FAVE

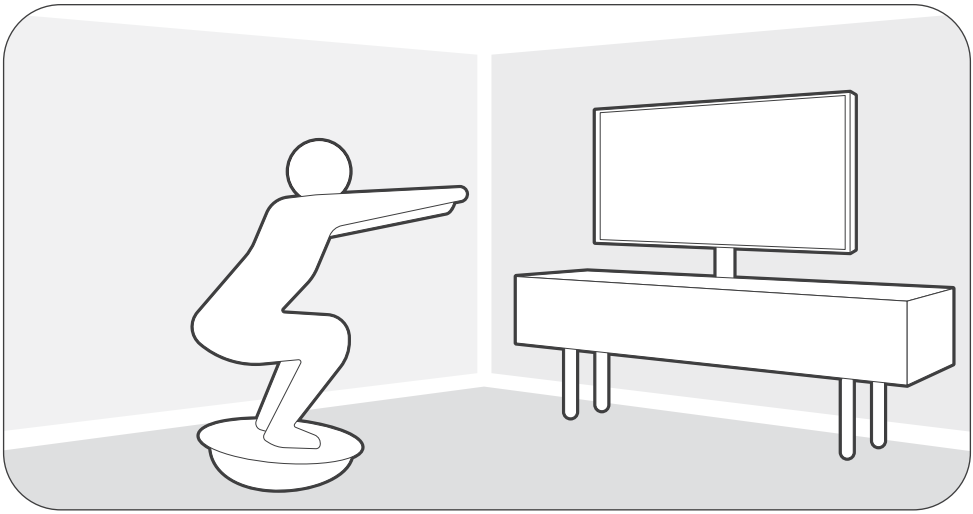

STRONG FRIENDS COMPANY

SMART BALANCE TRAINER

FAVE ALLFIT

FAVE ALLFIT presents a new way of balance training.

ALLFIT can even do overall body training because it stimulates the core muscles that are responsible for balancing our body, such as our back and abdomen, and responds to the minute movements of water by injecting water that continuously stimulates our body muscles.

Also, you can adjust the intensity of exercise by adjusting the amount of water appropriate for an individual.

FAVE

FAVE is a smart healthcare product that combines functional exercise equipment with ICT technology. Through the motion detection sensor of the product, you can enjoy various sensory contents and gain not only fun but also balanced body development and exercise effects.

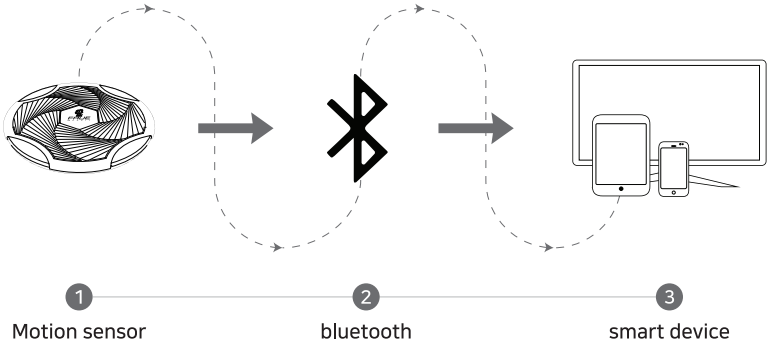

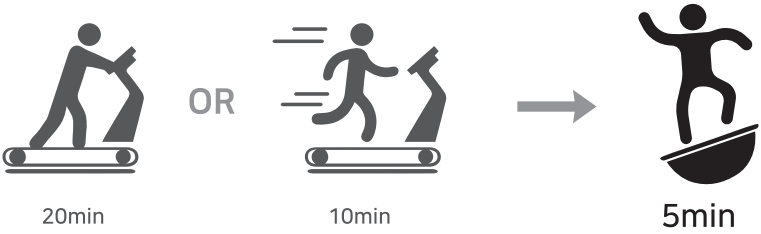

5-minute exercise with FAVE is more effective than a 20-minute walk or 10-minute run on a treadmill.

Enjoy balance training through FAVE ALLFIT!

Product composition.

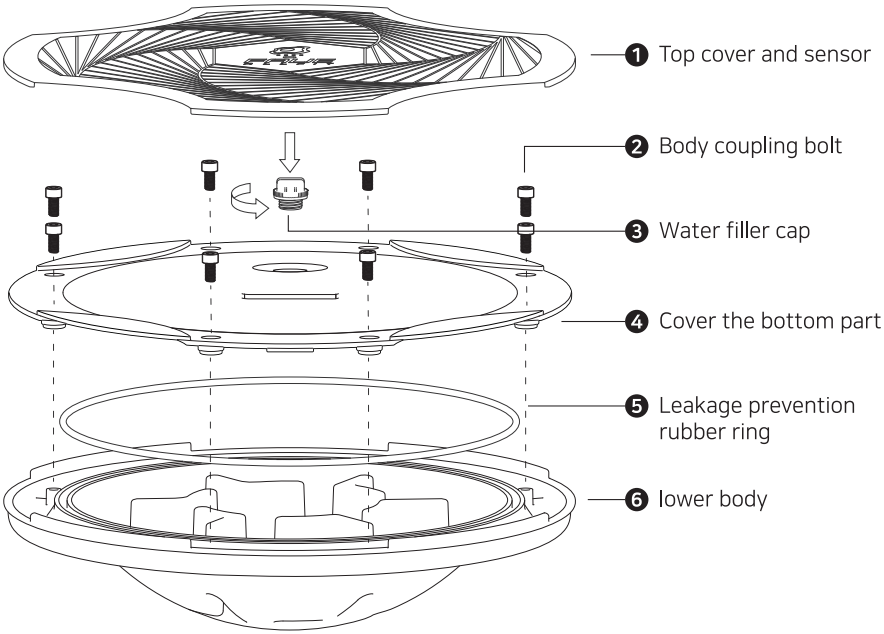

Accessories

User's Guide

Charging cable

Power pin

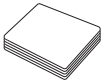
Yoga mat
(sold separately)

Product details

Name	FAVE ALLFIT
Size	D500 X H120
Weight	3.6kg
Material	PC, PP
Manufacturer	STRONG FRIENDS COMPANY of Korea

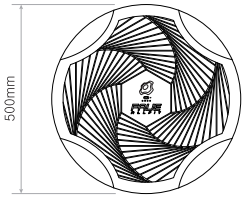

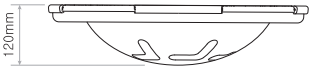

How to use

1. How to use it for the first time.

※ Please make sure to proceed to use the product.

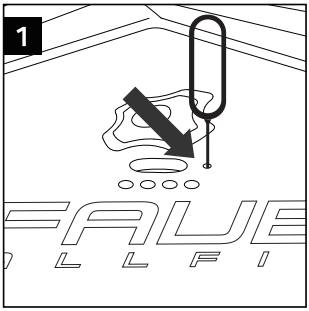

turn on the power by pressing the hole on the right side of the charging terminal with the enclosed power pin.

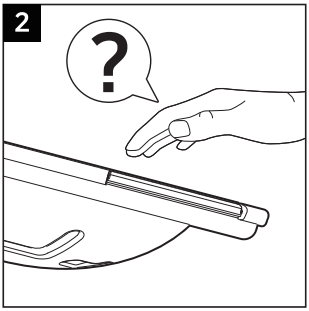

If you shake the product left and right. You can turn on the power.

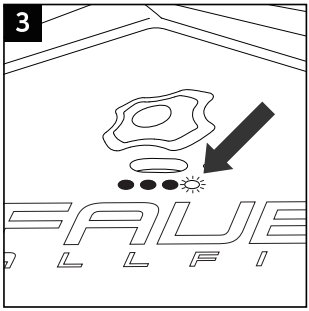

If there is more than one LED on the top, the power is turned on normally.

2. How to use it all the time.

※ Please follow how to use it for the first time.

If you shake the FAVE, the product turns on.
If Bluetooth is not connected and there is no operation for more than 3 minutes, the power is automatically turned off.

If the sensor's operation is not detected, please check the remaining battery capacity of the upper LED and charge it if necessary.

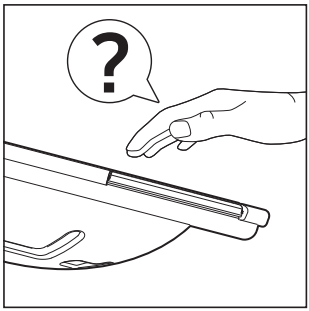

3. Display of remaining LED batteries.

(You can use it for up to 50 hours when fully charged)

Bluetooth	● ● ● ☼	
0% - 25%	● ● ● ○	
26% - 50%	● ● ○ ○	
51% - 75%	● ○ ○ ○	
76% - 100%	○ ○ ○ ○	

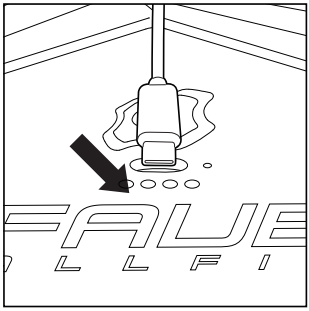

※ Charging is recommended when the battery LED is one compartment (0%-25%).

How to use

Standing up and basic posture.

※ For safe use, make sure to put the product on the mat or carpet.

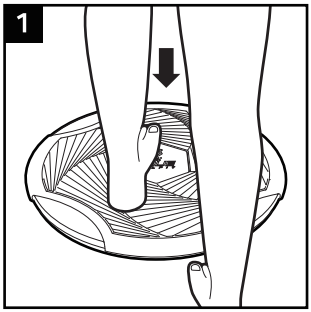

Put your left foot in the middle and put strength on your legs.

Stand with your right foot next to your left foot as much as possible.

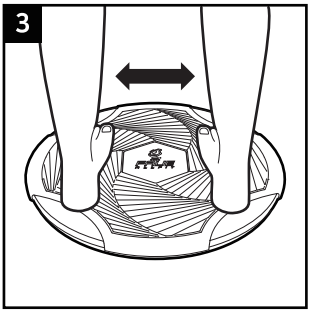

Spread your legs and relax. Balance it out.

Lower body exercise posture.

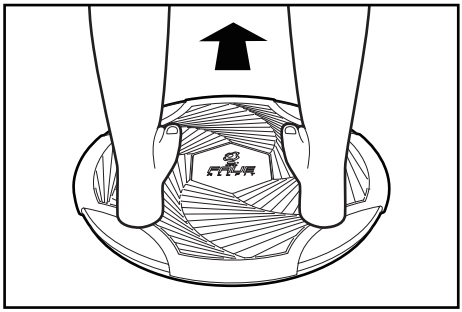

Please go up in the direction the FAVE logo looks straight up.

Upper body exercise posture.

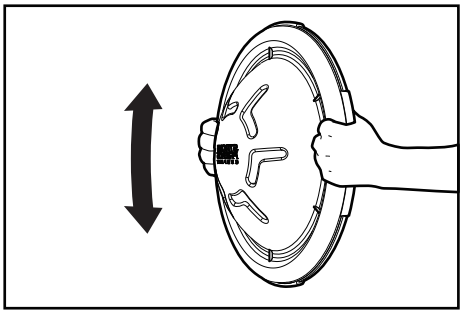

Please hold the FAVE logo facing the front.

Precautions for use

- Make sure to put it on a mat or carpet for safe use.
- Please stretch enough before use.
- Always use it with safety before use.
- Always check if there is any damage before use.
- Don't give a strong shock, such as throwing a product.
- Store and use to avoid fire and moisture.

Water injection and washing.

How to inject water.

ALLFIT can do more effective exercise by injecting water inside the product.

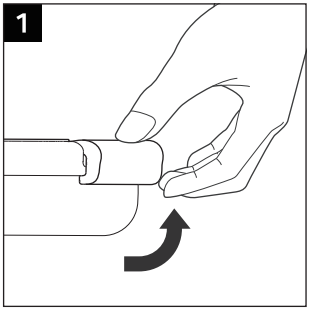

Separate the top four sides in order for water injection. (If you apply too much force, there is a risk of damage.)

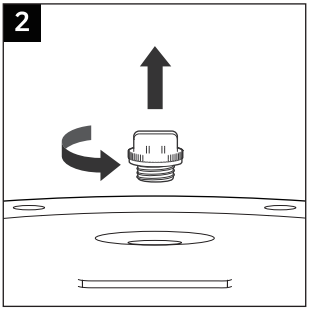

Turn the water stopper counterclockwise and open it.

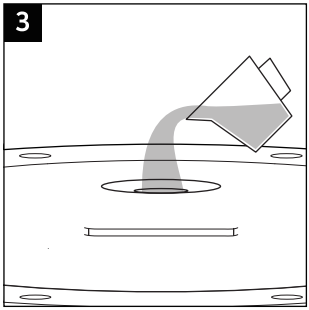

Fill the filler with water. (It's convenient to use a cup.)

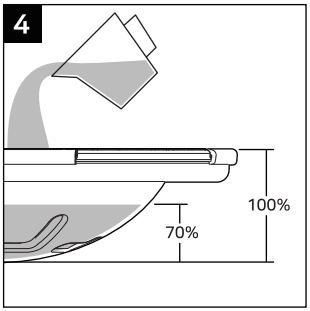

When injecting water, inject up to 70% of it.

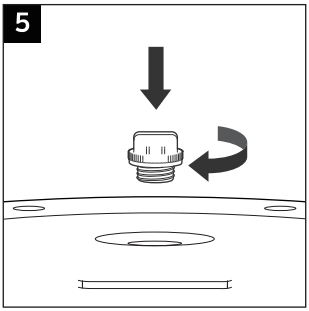

Turn the water stopper clockwise and close it tightly.

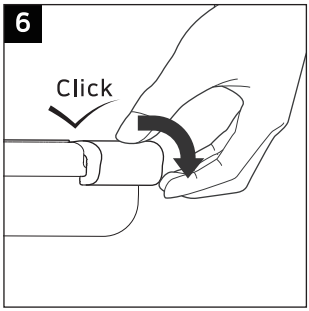

For the water stopper, assemble the four directions in order after the top position of the four places.

Precautions for assembling and disassembling

- When removing the top part, do not apply excessive force to remove it by bending excessively.
- Be careful not to let water enter the top when injecting water.
- After injecting water, remove all moisture and use it.
- Be sure to use the parts provided for the tightening.
- Do not inject liquid or hot water outside the water.
- If you open or close the water bottle cap hard, there is a risk of damage, so be careful.

STRONG FRIENDS

COMPANY

www.ifave.co.kr

Tel : (+82) 051-746-9888

Address : 1013, 39, Centum seo-ro, Haeundae-gu, Busan

E-mail : fave188170@faves.co.kr

FCC ID: 2A35YFAVEALLFIT

FCC NOTICE TO USERS:

This device complies with Part 15 of the FCC Rules. Operation is subject to the following two conditions:

(1) This device may not cause harmful interference, and

(2) This device must accept any interference received, including interference that may cause undesired operation.

Changes or modifications no expressly approved by the manufacturer(or party responsible) for compliance could void the user's authority to operate the equipment.

FCC Part 15.105 Statement

Note: This equipment has been tested and found to comply with the limits for a Class B digital device, pursuant to Part 15 of the FCC Rules. These limits are designed to provide reasonable protection against harmful interference in a residential installation. This equipment generates, uses and can radiate radio frequency energy and, if not installed and used in accordance with the instructions, may cause harmful interference to radio communications, However, there is no guarantee that interference will not occur in a particular installation. If this equipment does cause harmful interference to radio or television reception, which can be determined by turning the equipment off and on, the user is encouraged to try to correct the interference by one of the following measures:

-Reorient or relocate the receiving antenna.

-Increase the separation between the equipment and receiver.

-Connect the equipment into an outlet on a circuit different from that to which the receiver is connected.

-Consult the dealer or an experienced radio/TV technician for help.

IMPORTANT NOTE:

To comply with the FCC RF exposure compliance requirements, no change to the antenna or the device is permitted. Any change to the antenna or the device could result in the device exceeding the RF exposure requirements and void user’s authority to operate the device.