Abbott

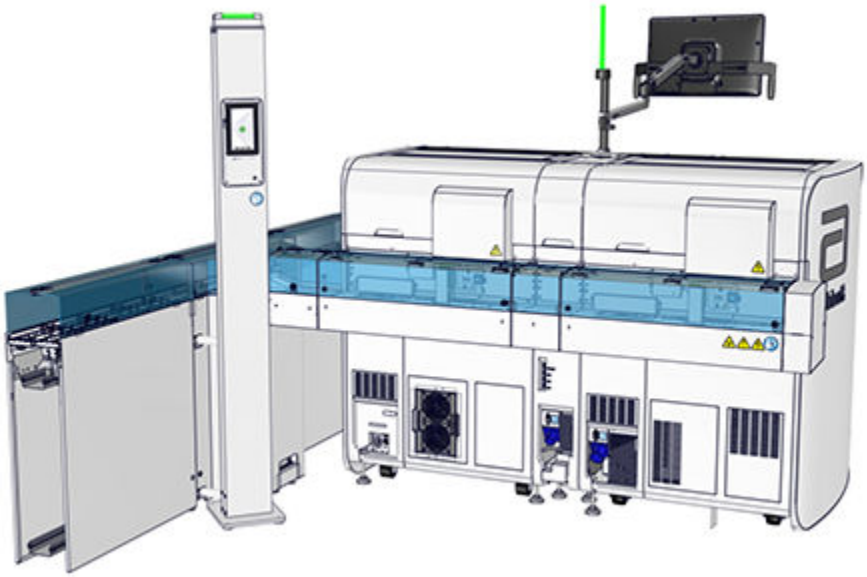

# Sample Access Line (SAL)

## Interface Manual

For use with the GLP systems Track Laboratory Automation System and the Sample Access Line

80003970-101 DRAFT

# Table of contents

**Read me first.....5**
General safety information.....6

**Section 1: Use or function.....7**
Safety features.....8
Throughput.....9
Bar code reader.....10
AccessPoints.....11
Software.....12

**Section 2: Installation procedures and special requirements.....13**
Transportation, installation, disassembly, and disposal.....14
Sample Access Line installation requirements.....15

**Section 3: Principles of operation.....17**

**Section 4: Performance characteristics and specifications.....19**

**Section 5: Operating instructions.....21**

**Section 6: Operational precautions and limitations.....23**

**Section 7: Hazards.....25**
Safety.....26

**Section 8: Service, maintenance, and diagnostics.....27**
Cleaning and maintenance.....28
Maintenance checks.....28
As-needed cleaning procedures.....29

**Section 9: Troubleshooting.....33**
Unlock and lock the track hoods.....34
Errors and troubleshooting.....36
Error with pipetting.....37
CAR with sample at AccessPoint, in traffic jam, or in long queue; sample matter has not been removed.....37
CAR with sample does not move to the analyzer.....37
Transport ceased on the track.....37

**Appendix A: Alinity ci-series SAL.....39**
Design and function.....40
Operating element.....42
Workflow.....42
Signal Lamp.....43
Technical data.....45
Sample Access Line operation.....46
Buttons.....46
Start screen.....47
Power on the Sample Access Line.....48

Place the Sample Access Line online....49
Place the Sample Access Line offline....49
Pause the Sample Access Line....50
Deactivate pause mode....50
Restart the Sample Access Line....51
Main menu screen element descriptions....52
Login screen....52
Access the Login screen....53
Information screen element descriptions....54
Access the Information screen....55
Access the Configuration screen....55
Error message screen....55
Acknowledge an error message....56
Acknowledge a message....57
Weekly cleaning procedure....58
Clean the monitor....58
Error messages....59
Communication and software update error messages (0-10000)....59
Module component error messages (20000-29999)....62
Error message on the touchscreen user interface....76
CAR with sample at AccessPoint, in traffic jam, or in long queue; sample matter has been removed....77

# Foreword

This interface manual is intended for the relevant laboratory staff operating the Sample Access Line (SAL).

Ensure that this interface manual is read and understood before SAL startup is performed. The interface manual is supplied as scope of delivery of the product and should be available to the laboratory staff at all times.

This interface manual contains information on the SAL properties and handling, and instructions and measures for maintaining its operational readiness.

The GLP systems Track laboratory automation system is a modular, customer-specific design. This interface manual refers only to the SAL. Ensure that the manuals relating to each single component are observed. In addition, observe the manuals for the connected analyzers.

For laboratory professional use only.

See the GLP systems Track Operations Manual for the following information:

- System security
- Customer service
- Intended use
- Proprietary statement
- Disclaimers
- GLP systems Track warranty statement for USA customers only
- GLP systems Track agency approvals
- Intellectual property statement
- Key to symbols
- Manufacturer and distributor
- Requirements for handling the specimens
- Safety icons
- Biological hazards
- Precautions
- Spill cleanup
- Requirements for decontamination
- Glossary

**Related information...**

*General safety information*, page 6

# General safety information

Before operating the Sample Access Line (SAL), you should read and understand the safety information in this manual.

For information about actions or conditions that can affect system performance, carefully review *Operational precautions and limitations*, page 23.

To become familiar with safety icons on the instrument and in this manual that indicate potentially hazardous situations, review *Hazards*, page 25. Comply with the hazard and safety information to minimize the potential for harm to personnel and damage to the laboratory environment.

These two sections of the manual contain supplemental information. Do not use the supplemental information to supersede workplace safety requirements. Review any significant differences between the supplemental information and the workplace safety requirements with management or a workplace safety representative.

This device complies with part 15 of the FCC Rules. Operation is subject to the following two conditions: (1) This device may not cause harmful interference, and (2) this device must accept any interference received, including interference that may cause undesired operation.

This device complies with Industry Canada license-exempt RSS standards. Operation is subject to the following two conditions: (1) This device may not cause interference, and (2) this device must accept any interference, including interference that may cause undesired operation of the device.

For customers in the European Union: If, in the course of using this device, you have reason to believe that a serious incident has occurred, please report it to the manufacturer and to your national authority.

The SAL is state-of-the-art. However, residual dangers exist. The safety instructions must be read and observed. The manufacturer accepts no liability for failure to observe the safety instructions.

See the GLP systems Track Operations Manual for the complete listing of all safety information.

**Related information...**

*Read me first*, page 5

# Introduction

The GLP systems Track is a modular laboratory automation system designed to automate pre-analytical and post-analytical processing, including sample handling, in order to automate sample processing in clinical laboratories. The system consolidates multiple analytical instruments into a unified workflow. The Sample Access Line (SAL) module is an optional module of the GLP systems Track that a customer may choose to include in their LAS configuration.

The following list provides key features of SAL:

- Samples are input directly onto the GLP systems Track.
- The samples are available for further distribution immediately after processing.
- The modular design of the SAL covers all possible analyzer module configurations and is scalable to meet requirements.

**Related information...**

*Safety features*, page 8
*Throughput*, page 9
*Bar code reader*, page 10
*AccessPoints*, page 11
*Software*, page 12

# Safety features

The track hood is a safety feature of the Sample Access Line (SAL).

**Track hood**

The SAL track hood is secured on each end with a lock and must be locked during operation.

**NOTE:** The track hoods must be unlocked only in accordance with the laboratory regulations.

**Related information...**

*Use or function*, page 7

# Throughput

A continuous supply of samples and the availability of CARs ensures optimum throughput. Throughput depends on the cycle time of each analyzer module and the number of tests performed.

**Related information...**

*Use or function*, page 7

# Bar code reader

In accordance with Clinical and Laboratory Standards Institute (CLSI) document AUTO02-A2, a sample is identified by a bar code, which is read during transport to or from the CAR.

For reliable sample identification, bar codes on sample tubes are read in addition to CAR detection at AccessPoints.

The bar code reader is a Class 2 Laser product with approximately a 100% reading rate, which requires correct alignment and good quality of the bar codes according to CSLI document AUTO02-A2. The bar code reader is a Class 2 embedded laser but is Class 1 as installed on the GLP systems Track.

The following bar code types can be read individually or in combination with each other:

- Codabar
- Code 39
- Code 128
- Interleaved 2 of 5

Samples with unrecognized bar codes are routed to a designated area.

**CAUTION: Incorrectly assigning a bar code may constitute a health hazard for patients.** Illegible or incorrectly assigned bar codes cause incorrect patient results. Bar codes with checksums are recommended on the laboratory automation system.

**NOTE:** Contact an Abbott Laboratories representative or an authorized service representative to configure the bar code reader for different bar code types.

**Related information...**

*Use or function*, page 7

# AccessPoints

CARs are held in place at AccessPoints for sample processing on the analyzer. AccessPoint functionality includes the following features:

- Reading of CAR IDs
- Reading of bar codes on sample tubes by the bar code reader
- Sample pipetting by using the pipette unit of the analyzer

**Related information...**

*Use or function*, page 7

# Software

CARs are controlled by the Track Sample Manager (TSM). To route samples on the track, TSM must be connected to a routing engine such as the Track Workflow Manger (TWM). TWM is connected to middleware, which receives sample orders from the laboratory information system.

**TSM tasks**

- Information about new samples (input)
- Sample removal through the output areas (output) after process steps are completed
- Execution of target plans from TWM
- Forwarding of the samples (CARs) to the next target
- Creation of statistics and report files
- Status display of the Sample Access Line (SAL)

**SAL tasks**

- Communication with the analyzer
- Verification of bar codes by using bar code readers
- Initiation of pipetting by the analyzer
- Routing of probes to the AccessPoints

**Related information...**

*Use or function*, page 7

# Introduction

For correct sampling and optimal system performance, the Sample Access Line must be correctly installed. After the system has been installed, it must be configured to meet individual laboratory requirements.

**Related information...**

*Transportation, installation, disassembly, and disposal*, page 14

*Sample Access Line installation requirements*, page 15

# Transportation, installation, disassembly, and disposal

Transportation, installation, and disassembly are performed by the analyzer manufacturer's representative or an authorized service representative. The GLP systems Track and the Sample Access Line have a direct electrical connection that ensures their connection. Decontaminate and dispose of the laboratory automation system and all of its components in accordance with the applicable national guidelines.

**NOTE:** The safety instructions in the GLP systems Track Operations Manual must be observed.

**Related information...**

*Installation procedures and special requirements*, page 13

# Sample Access Line installation requirements

A Sample Access Line (SAL) system may only be installed indoors. The floor must have a nonslip, load-bearing surface. The system is freestanding and is not fixed to the floor.

**Related information...**

*Installation procedures and special requirements*, page 13

# NOTES

# Introduction

The Sample Access Line (SAL) is an interface between the GLP systems Track and the connected analyzers. Each analyzer module with pipette unit is connected to a SAL section. The SAL track is connected to the GLP systems Track and can be integrated into existing GLP systems Track systems.

Samples are presented to the module by the GLP systems Track. The sample-loaded CARs are stopped at the AccessPoints and held in place. The bar code reader reads the bar codes on the sample tubes. The analyzer pipettes the specimens. After the pipetting process is completed, CARs with samples continue on the track for additional processing or archiving.

Sample processing is controlled by the anayzer system control module. Operation, troubleshooting, and information retrieval are performed on the analyzer user interface.

# NOTES

# Introduction

Before operating the Sample Access Line, become familiar with system performance characteristics.

# NOTES

# Introduction

Before operating the system, become familiar with hardware components of the system and with fundamental principles of the user interface.

# NOTES

# Introduction

For optimal operator safety and accurate test results, comply with operational requirements, precautions, and limitations. Operators must be trained before they are allowed to operate the system. Failure to comply can affect system performance, and may cause damage to the system or may adversely affect test results.

For more information regarding operational precautions and limitations, refer to the GLP systems Track Operations Manual.

# NOTES

# Introduction

To minimize the potential for harm to personnel and damage to the laboratory environment, comply with the hazard and safety information.

This section contains supplemental information. Do not use the supplemental information to supersede workplace safety requirements. Review any significant differences between the supplemental information and the workplace safety requirements with management or a workplace safety representative.

For more information regarding hazards, refer to the GLP systems Track Operations Manual.

**Related information...**

*Safety*, page 26

# Safety

**CAUTION: Radio-frequency identification (RFID) devices.** The operator should not change or modify RFID devices without approval by the party responsible for compliance. This action could void the operator's authority to operate the equipment.

**CAUTION: Radio frequency exposure.** The operator should be at least 20 cm from all RFID devices.

**CAUTION: Risk of infection due to skin contact.** The operator may be exposed to serious injury, including death or infections, due to skin contact with infected sample matter. Wear personal protective equipment during operation.

**CAUTION:** To prevent operator injury, the module status must be transitioned to Offline before the module interior is accessed.

**NOTE:** Follow all safety information in this manual. All work not included in this manual may only be performed by an Abbott Laboratories representative or an authorized service representative.

**NOTE:** The safety instructions laid out in the operations manual for the GLP systems Track laboratory automation system base system must be observed.

**Related information...**

*Hazards*, page 25

# Introduction

The appropriate service, maintenance, and diagnostics of the system are some of the most important aspects of a complete quality assurance program.

**NOTE:** Only approved customer-replaceable components are permitted to be used.

**Related information...**

*Cleaning and maintenance*, page 28

# Cleaning and maintenance

Before cleaning or maintenance work is performed, the Sample Access Line must be transitioned to Offline status or powered off.

**CAUTION: Risk of injury due to inattentiveness while opening and closing track hoods.** The operator may be injured while opening and closing the track hoods. Carefully open and close the track hoods. Ensure that no body parts are placed between the housing and the track hoods.

**CAUTION: Risk of infection due to skin contact.** The operator may be exposed to serious injury, including death or infections, due to skin contact with infected sample matter. Wear personal protective equipment during operation.

**CAUTION: Contamination of sample matter with disinfectant.** Inappropriate cleaning may cause sample contamination, which may adversely affect the health of patients due to incorrect treatment. Avoid contact between the sample matter and disinfectant. Only allow trained personnel to clean the laboratory automation system (LAS). Clean the LAS only with a lint-free cloth, not a spray.

**CAUTION: Risk of harm to eyes by light beam.** Looking directly into the light beam of the bar code reader may cause eye damage. Do not look directly into the light beam. Wear suitable eye protection.

**CAUTION: Touching the bar code reader mirror may cause damage to the mirror.** Never touch the mirror. The mirror must be cleaned only by an Abbott Laboratories representative or an authorized service representative.

**NOTE:** The safety instructions in the GLP systems Track Operations Manual for the LAS must be observed.

**NOTE:** All work not included in this manual may only be performed by an Abbott Laboratories representative or an authorized service representative.

**Related information...**

*Service, maintenance, and diagnostics*, page 27

*Maintenance checks*, page 28

*As-needed cleaning procedures*, page 29

## Maintenance checks

Dust can cause system malfunctions. The following maintenance checks are required on the Sample Access Line to maintain optimal system performance.

| Maintenance check | Activity | Interval |
|---|---|---|
| Visually inspect for dust. | Carefully remove any dust. | Daily |
| Visually inspect for damage and errors. | Resolve any errors. | Daily |

| Maintenance check | Activity | Interval |
|---|---|---|
| Verify that no foreign objects are present on the track. | Remove any foreign objects. | Daily |
| Verify that the track hoods are closed and locked. | Close the track hoods if applicable. | Daily |

**Related information...**

*Cleaning and maintenance*, page 28

## As-needed cleaning procedures

As-needed cleaning procedures are required on the Sample Access Line.

**CAUTION: Risk of injury due to inattentiveness while opening and closing track hoods.** The operator may be injured while opening and closing the track hoods. Carefully open and close the track hoods. Ensure that no body parts are placed between the housing and the track hoods.

**Related information...**

*Cleaning and maintenance*, page 28
*Clean the lane elements*, page 29
*Clean the guiding slot*, page 30
*Clean the track hood*, page 30
*Clean the AccessPoint*, page 30
*Clean the barcode reader*, page 31

### Clean the lane elements

**Required materials**

- Handheld vacuum (recommended)
- Surface disinfectant used in the laboratory
- Lint-free cloth

**Required module status** Offline

Perform this as-needed procedure to clean the lane elements.

**NOTE:** To avoid sample contamination, perform maintenance procedures only when no samples are present.

1. Remove dust from the lane elements with the handheld vacuum cleaner.
2. Dampen a lint-free cloth with a surface disinfectant.
3. Carefully wipe the lane elements to remove any dust.

**Related information...**

*As-needed cleaning procedures*, page 29

## Clean the guiding slot

**Required materials**

- Handheld vacuum (recommended)
- Extra thin cotton swab
- Soft brush

**Required module status** Offline

Perform this as-needed procedure to clean the guiding slot.

**NOTE:** To avoid sample contamination, perform maintenance procedures only when no samples are present.

1. Remove dust from the guiding slot with the handheld vacuum cleaner.
2. Carefully remove any dust from the guiding slot with a cotton swab.
3. Carefully remove any dust from the guiding slot with a soft brush.

**Related information...**

*As-needed cleaning procedures*, page 29

## Clean the track hood

**Required materials**

- Surface disinfectant used in the laboratory
- Lint-free cloth

**Required module status** Offline

Perform this as-needed procedure to clean the track hood.

1. Ensure that the track hood is closed before it is cleaned.
2. Dampen a lint-free cloth with a surface disinfectant.
3. Carefully wipe the track hood to remove any dust.

**Related information...**

*As-needed cleaning procedures*, page 29

## Clean the AccessPoint

**Required materials**

- Surface disinfectant used in the laboratory

- Lint-free cloth

**Required module status** Offline

Perform this as-needed procedure to clean the AccessPoint.

1. Open the track hood.
2. Dampen a lint-free cloth with a surface disinfectant.
3. Carefully wipe the AccessPoint to remove any dust.
4. Close the track hood.

**Related information...**

*As-needed cleaning procedures*, page 29
*Unlock and lock the track hoods*, page 34

## Clean the barcode reader

**Required materials**

- Gentle, anti-static glass cleaner
- Lint-free cloth

**Required module status** Offline

Perform this as-needed procedure to clean the bar code readers.

1. Dampen a lint-free cloth with a gentle, antistatic glass cleaner.
2. Carefully wipe the barcode reader to remove any dust.
3. Ensure that the orientation of the barcode reader is not changed so that no errors occur during the barcode reading process.

**Related information...**

*As-needed cleaning procedures*, page 29

# NOTES

# Introduction

Problems with the Sample Access Line are characterized by symptoms. Troubleshooting tools, references, and suggested techniques help to trace the symptom to one or more root causes.

After determining the root cause, perform the corrective actions to resolve the problem.

Before troubleshooting is performed for system errors, the Sample Access Line must be transitioned to Offline status or powered off.

All work not included in this manual may only be performed by an Abbott Laboratories representative or an authorized service representative.

**Related information...**

*Unlock and lock the track hoods*, page 34

*Errors and troubleshooting*, page 36

# Unlock and lock the track hoods

**Required materials** Unlock key

Perform this procedure to unlock and lock the track hoods.

1. To unlock the track hood, insert the unlock key [2] into the lock mechanism [1] at each end of the track hood and turn.

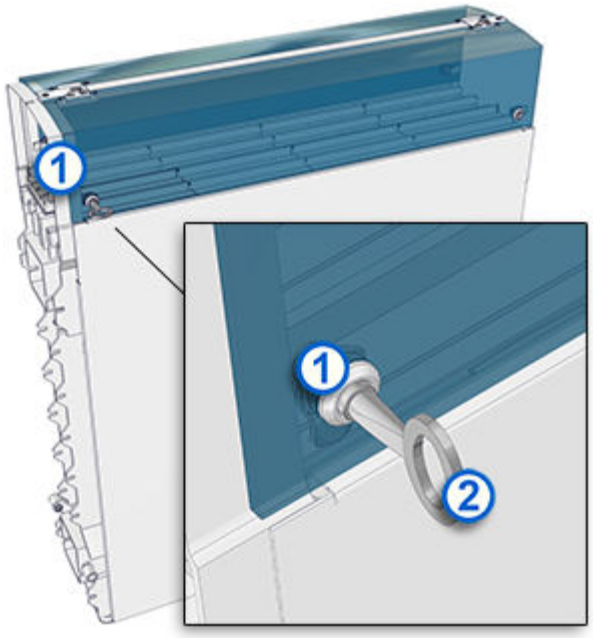


2. Open the track hood.

3. To lock the track hood, close the track hood.
4. Insert the unlock key [2] into the lock mechanism [1] at each end of the track hood and turn.

**Related information...**

*Troubleshooting*, page 33

# Errors and troubleshooting

**CAUTION: Risk of death due to electrical voltage or mechanical movement of parts, or risk of fire due to short circuits**. Electric shocks, moving parts, or fires can cause severe injuries or death. Keep the access to the mains switch, mains plug, and track filter power switch clear from objects.

**CAUTION: Misdiagnosis of samples resulting from a manual reset of the Sample Access Line (SAL) controller**. Incorrect order data on the analyzer can cause incorrect assignment of test results. Ensure that the connected analyzer is not processing samples.

**CAUTION: Risk of infection due to skin contact.** The operator may be exposed to serious injury, including death or infections, due to skin contact with infected sample matter. Wear personal protective equipment during operation.

**CAUTION: Manual removal or exchange of samples in the SAL waiting area presents a health risk to patients and test results.** Manual removal or exchange of samples may adversely affect the health of patients due to incorrect treatment. Do not manually remove or exchange samples in CARs on the laboratory automation system. Do not change the CAR sequence. Keep the track hood closed.

**CAUTION: Risk to health and material damage caused by capped sample tubes.** Capped sample tubes may cause damage to the pipette unit of the analyzer. This damage may cause delayed results, which may adversely affect the health of patients. Ensure that only uncapped sample tubes are transferred to the pipette unit of the analyzer.

**CAUTION: Danger of incorrect pipetting and incorrect results.** Inadequate sample volume in sample tubes can cause incorrect pipetting and incorrect results. Ensure that the sample volume in the sample tubes is adequate.

**NOTE:** The connection of third-party equipment on the track socket strip may cause errors in the operating sequence. Do not connect any third-party equipment to the track socket strip.

**NOTE:** Ensure that the area for the track sockets can be accessed easily. If an error occurs, unplug the grounding plug to disconnect the electrical connection. For more information, contact an Abbott Laboratories representative or an authorized service representative.

**Related information...**

*Troubleshooting*, page 33

*Error with pipetting*, page 37

*CAR with sample at AccessPoint, in traffic jam, or in long queue; sample matter has not been removed*, page 37

*CAR with sample does not move to the analyzer*, page 37

*Transport ceased on the track*, page 37

## Error with pipetting

| Probable cause | Corrective action |
|---|---|
| The wrong sample tube size was used. | Only use sample tubes that are approved for the laboratory automation system. |

**Related information...**

*Errors and troubleshooting*, page 36

## CAR with sample at AccessPoint, in traffic jam, or in long queue; sample matter has not been removed

| Probable cause | Corrective action |
|---|---|
| The analyzer is not ready for operation or the laboratory automation system connection was disrupted. | 1. Transition the analyzer to an operable status.<br>2. Observe the manufacturer's instructions. |

**Related information...**

*Errors and troubleshooting*, page 36

## CAR with sample does not move to the analyzer

| Probable cause | Corrective action |
|---|---|
| An error or defect occurred that involves the switch. | Contact an Abbott Laboratories representative or an authorized service representative. |
| An analyzer error occurred. | Resolve the error on the analyzer. |
| An error occurred with the Track Sample Manager (TSM) or the Track Workflow Manager (TWM). | 1. Verify the TSM or TWM connection.<br>2. Contact an Abbott Laboratories representative or an authorized service representative if necessary. |

**Related information...**

*Errors and troubleshooting*, page 36

## Transport ceased on the track

| Probable cause | Corrective action |
|---|---|
| A fuse failure occurred. | Contact an Abbott Laboratories representative or an authorized service representative. |

**Related information...**

*Errors and troubleshooting*, page 36

# NOTES

This appendix contains information specific to the Alinity ci-series Sample Access Line (SAL).

**Related information...**

*Design and function*, page 40

*Technical data*, page 45

*Sample Access Line operation*, page 46

*Weekly cleaning procedure*, page 58

*Error messages*, page 59

*Error message on the touchscreen user interface*, page 76

*CAR with sample at AccessPoint, in traffic jam, or in long queue; sample matter has been removed*, page 77

# Design and function

The Sample Access Line (SAL) section is installed to the Alinity analyzers and connected to the GLP systems Track with a T-element. The SAL is controlled in the user interface (UI) on a monitor.

Samples are pipetted directly from the track by the Alinity analyzers. The pipette unit is part of the Alinity analyzer. For more information, see the Alinity ci-series Operations Manual.

Each SAL Alinity section has a pipette unit with an AccessPoint and bar code reader, as well as a track hood. For reliable sample identification, a bar code reader is used at the AccessPoint. Identification is performed through a 90-degree change in direction by using a metal-free, dielectric mirror.

This interface manual describes the following combination for example purposes: Alinity c and Alinity i with three SAL sections.

**Figure 1: Overview of SAL**

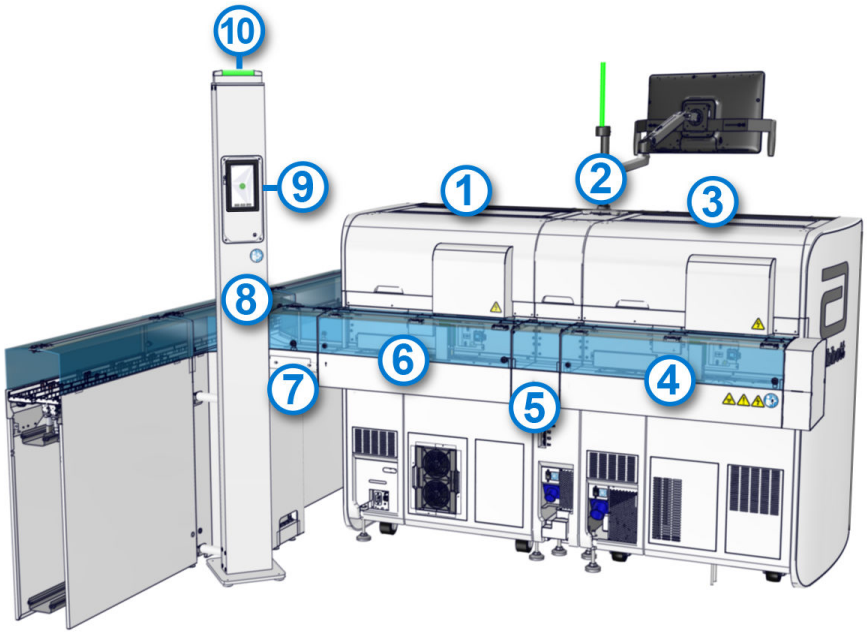


**Legend:**

1. Alinity ci-series analyzer
2. Alinity ci-series system control module (SCM)
3. Alinity ci-series analyzer
4. SAL Alinity end section
5. SAL SCM section
6. SAL Alinity section
7. SAL T-element

8. UI
9. Monitor
10. Signal lamp

**Figure 2: Interior view of SAL**

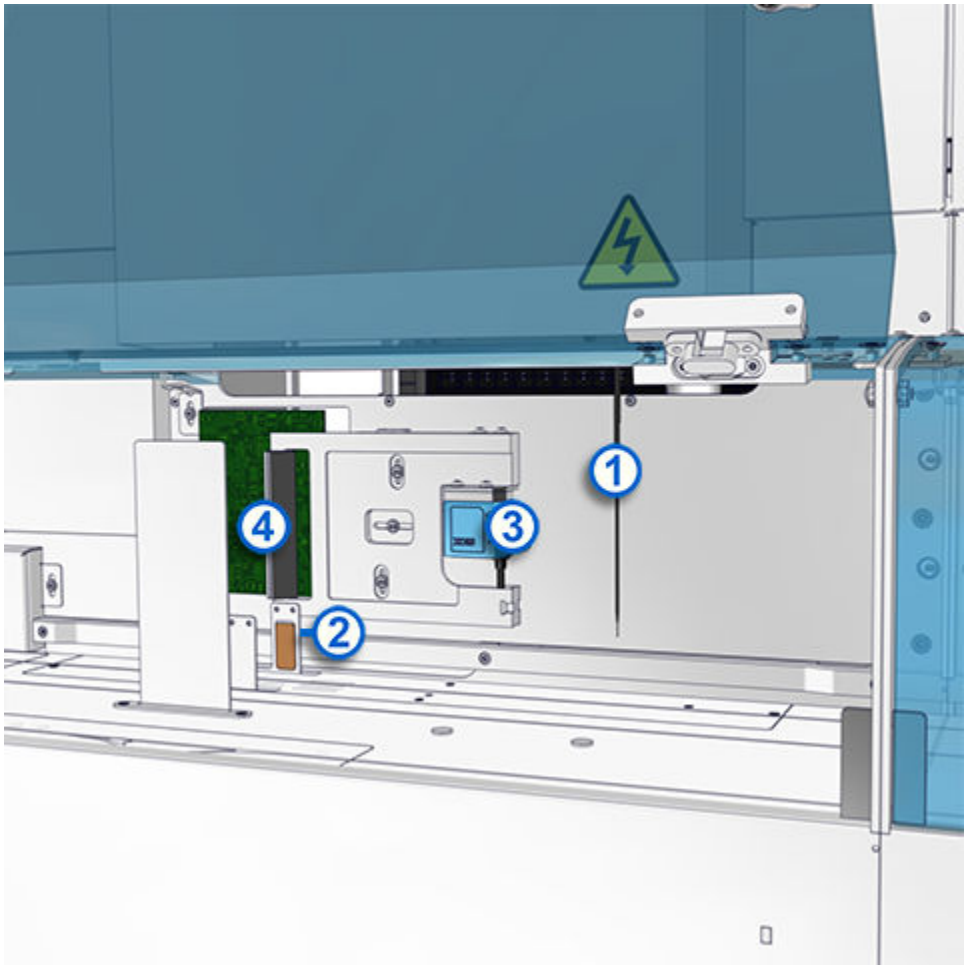


**Legend:**

1. Pipette unit
2. AccessPoint
3. Bar code reader
4. Bar code reader mirror

**CAUTION: Touching the bar code reader mirror may cause damage to the mirror.** Never touch the mirror. The mirror must be cleaned only by an Abbott Laboratories representative or an authorized service representative.

GLP systems Track is a CLASS 1 LASER PRODUCT with embedded Class 2 lasers. For more information, refer to the GLP systems Track Operations Manual. **Do not stare into the beam.**

**CAUTION: Manual removal or exchange of samples in the SAL waiting area presents a health risk to patients and test results.** Manual removal or exchange of samples may adversely affect the health of patients due to incorrect treatment. Do not manually remove or exchange samples in CARs on the laboratory automation system. Do not change the CAR sequence. Keep the track hood closed.

**Related information...**

*Alinity ci-series SAL*, page 39
*Operating element*, page 42
*Workflow*, page 42
*Signal Lamp*, page 43

## Operating element

The operating element is used to configure the modules according to the user requirements. Use is similar for all modules.

Samples are input on the GLP systems Track. The touchscreen user interface (UI) is a display format where the operator can perform procedures, troubleshoot errors, and retrieve information.

**Touchscreen UI**

- Displays the module status of the Sample Access Line (SAL)
- Displays error messages that are used for troubleshooting
- Displays corrective actions for the error messages

**Functions**

- Provides online, pause, offline, and service modes for SAL
- Initializes SAL
- Stores input settings

**Related information...**

*Design and function*, page 40

## Workflow

Sample processing is controlled by the Alinity ci-series system control module (SCM). Based on the module configuration and the analyzer configuration, pipetting can be performed on all processing modules.

**Pipetting**

- The sample tube remains in the CAR.

- Direct sample pipetting can be performed by using the pipette unit of the analyzer.
- Samples can be directly transported to another module if required.
- Parallel sample processing is possible through the manual rack module on the Alinity module (see STAT) and the GLP systems Track.

**Pipetting sequence**

- Local loading of sample tubes is available by using the racks on the Alinity ci-series reagent and sample manager (RSM).
- When sample tubes are loaded from the RSM and the GLP systems Track, the pipetting sequence is one CAR with sample from the track to one rack of sample tubes, which is described as interleave 1:1.

**Distribution**

- A maximum of seven additional samples are provided for each pipette unit on the SAL.
- An additional waiting area is available for each module (a maximum of eight samples for each module).
- High-priority samples are prioritized (STAT).
- Samples are immediately forwarded for additional analysis, distribution, or final archiving.

**Related information...**

*Design and function*, page 40

## Signal Lamp

The signal lamp is a safety feature of the Sample Access Line (SAL).

The signal lamp is located on the top of the user interface (UI).

**IMPORTANT:** Safety equipment may not be bypassed or removed from operation.

The signal lamp uses the following color indicators:

| | | |
|---|---|---|
| **Green** | **Blinking** | The system is being initialized. |
| | **Steady** | The system is ready for operation and is functioning correctly. |

| | |
|---|---|
| **Yellow** | The module status is Pause or Offline, but the system is still powered on. Operator intervention may be necessary. |
| **Red** | A system error occurred. The system is not ready for operation. Corrective actions are displayed on the UI. |
| **Blue** | Service work is being performed. |
| **No signal** | The system is powered off. |

For color-blind users, blinking behavior can be assigned to the colors yellow, red, and blue during startup:

| | |
|---|---|
| **Green** | No special blinking behavior is assigned. |
| **Yellow** | The indicator blinks with intervals and pauses of equal length. |
| **Red** | The indicator displays single short blinks with long pauses. |
| **Blue** | The indicator displays two short blinks with long pauses while service work is being performed. |

**Related information...**

*Design and function*, page 40

# Technical data

**NOTE:** Only sample tubes approved for the laboratory automation system (LAS) may be used.

**NOTE:** Throughput depends on the Alinity ci-series configuration and the input of samples on the GLP systems Track.

**NOTE:** The safety instructions in the GLP systems Track Operations Manual must be observed.

**Table 1: Technical data**

| | |
|---|---|
| **Throughput** | 200 samples per hour for each connected Alinity ci-series analyzer |

**Table 2: Environmental specifications**

| | |
|---|---|
| **Altitude** | 30.8 m (100 ft) below sea level to 2000 m (6561 ft) above sea level |
| **Ambient temperature during operation** | 15°C to 30°C |
| **Relative humidity during operation** | 30% to 80%, noncondensing |
| **Acoustic level:**<br>• SAL<br>• Alinity ci-series | <br>Maximum 65 dBA<br>Comply with the manufacturer specifications. |

**NOTE:** Electrical lines for the SAL are routed in the power ducts of the GLP systems Track. The outlets installed in the SAL are used only for the LAS.

**Table 3: Electrical safety parameters**

| | |
|---|---|
| Installation category | II (overvoltage category) |
| Pollution degree | 2 |
| **NOTE:** Electrical safety parameters have no bearing on performance. | |

**Table 4: Energy data specifications**

| | |
|---|---|
| **Supply voltage** | 220 V - 230 V |
| **Supply frequency** | 50 Hz/60 Hz |

**Related information...**

*Alinity ci-series SAL*, page 39

# Sample Access Line operation

During normal operation, the status of the Sample Access Line (SAL) is Online. Samples are automatically routed to the SAL from input modules. The operator can transition the SAL status to Offline or Online on the touchscreen user interface. Ensure that the track hoods are closed and locked before operating the SAL.

**NOTE:** Before assay calibrations or quality controls are run on the Alinity ci-series reagent and sample manager, the SAL must be placed Offline on one Alinity ci-series processing module that is attached to the SAL. For multiple Alinity ci-series processing modules that are attached to the SAL, refer to the Alinity ci-series Operations Manual to disable reagents to run assay calibrations or quality controls while the SAL is Online.

**CAUTION: Incorrect sample handling may cause a health risk due to incorrect analysis results.** Incorrect sample handling during laboratory automation system (LAS) operation may cause sample contamination, which can cause delayed results or incorrect patient diagnoses. Only allow trained personnel to operate the LAS. Specifically assess the situation each time after an error occurs. Keep the track hood closed.

**Related information...**

*Alinity ci-series SAL*, page 39
*Buttons*, page 46
*Start screen*, page 47
*Power on the Sample Access Line*, page 48
*Place the Sample Access Line online*, page 49
*Place the Sample Access Line offline*, page 49
*Pause the Sample Access Line*, page 50
*Deactivate pause mode*, page 50
*Restart the Sample Access Line*, page 51
*Main menu screen element descriptions*, page 52
*Login screen*, page 52
*Access the Login screen*, page 53
*Information screen element descriptions*, page 54
*Access the Information screen*, page 55
*Access the Configuration screen*, page 55
*Error message screen*, page 55
*Acknowledge an error message*, page 56
*Acknowledge a message*, page 57

## Buttons

The touchscreen user interface includes the following buttons.

| | |
|---|---|
| | The **Start** button initializes the Sample Access Line. |
| | The **Information** button displays the connection status information. |
| | The **Configuration** button changes the settings. |
| | The **Pause** button (blinking green) pauses system operation. CARs that have already been routed are not redirected. |
| | The **End pause** button resumes system operation. |
| | The **Online** button (steady illumination) indicates that the module status is Online. |
| | The **Offline** button (arrow is unavailable) indicates that the module status is Offline. |
| | The **Exit** button saves the changes and navigates to the main menu. |
| | The **Next** button saves the changes and navigates to the next screen. |
| | The **Back** button deletes the changes and navigates to the previous screen. |

**Related information...**

*Sample Access Line operation*, page 46

## Start screen

The Start screen is displayed on the touchscreen user interface. The **Start** button [1] is illuminated green when the Sample Access Line is ready for initialization.

**Figure 3: Start screen**

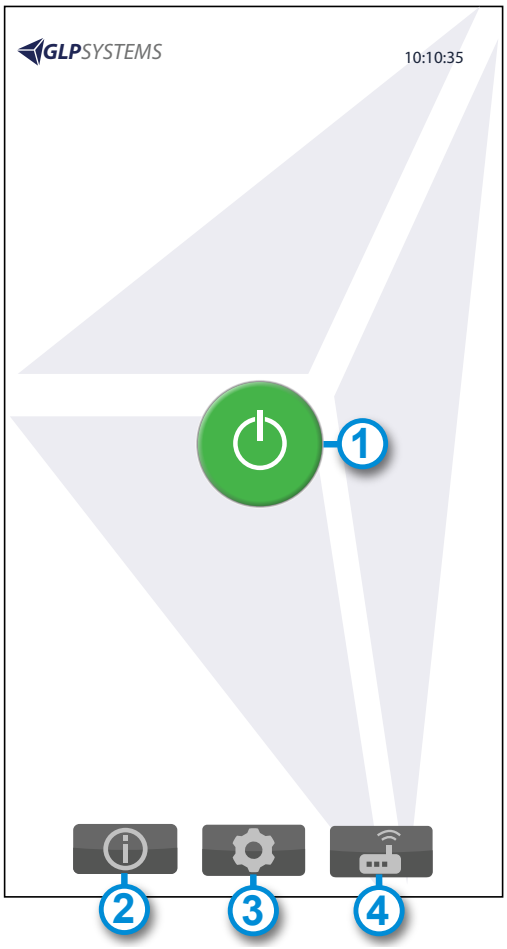


**Legend:**

1. **Start** button
2. **Information** button
3. **Configuration** button
4. **Manual input for Internet protocol address** button

**Related information...**

*Sample Access Line operation*, page 46

## Power on the Sample Access Line

The system is initialized automatically. The signal lamp flashes green. The signal lamp is illuminated steady green after initialization is completed. The system is online and the main menu is displayed.

**CAUTION:** Restarting the Sample Access Line (SAL) while the analyzer is processing samples presents a health risk to patients and test results. Ensure that all aspirations have been completed before restarting the SAL. During initialization, CARs may be released from AccessPoints and can potentially cause incorrect aspirations or spilled samples.

**Related information...**

*Sample Access Line operation*, page 46

## Place the Sample Access Line online

| | |
|---|---|
| **Prerequisite** | The arrow area of the **Online/Offline** button is gray. |
| **Required module status** | Offline |

Perform this procedure to place the Sample Access Line (SAL) online.

**NOTE:** The SAL is automatically online after being powered on.

1. On the main menu, tap the gray area of the **Online/Offline** button .
2. Wait for the module to transition to a status of Online.

The **Online/Offline** button and the signal lamp are illuminated steady green. The module is online.

**Related information...**

*Sample Access Line operation*, page 46

## Place the Sample Access Line offline

| | |
|---|---|
| **Prerequisite** | The **Online/Offline** button is illuminated steady green. |
| **Required module status** | Online |

Perform this procedure to place the Sample Access Line (SAL) offline. All processes running in the module stop. CARs are no longer routed to the module.

**NOTE:** The SAL is automatically online after being powered on.

1. On the main menu, tap the green arrow area of the **Online/Offline** button .
2. Wait for the module to transition to a status of Offline.

The **Online/Offline** button is gray. The signal lamp is illuminated steady yellow. The module is offline.

**Related information...**

*Sample Access Line operation*, page 46

## Pause the Sample Access Line

| | |
|---|---|
| **Prerequisite** | The **Online/Offline** button is illuminated steady green. |
| **Required module status** | Online |

Perform this procedure to pause the Sample Access Line (SAL).

When the SAL is paused, all processes running in the module stop. However, the connection to the Track Sample Manager remains intact. CARs are still routed to the module.

1. On the main menu, tap the **Pause** button .
2. Wait for the module to transition to a status of Pause.

The **End Pause** button is displayed. The signal lamp is illuminated steady yellow. The module is temporarily paused. The CARs that have already been routed are not redirected.

**NOTE:** If the module is paused for longer than 5 minutes, the module automatically transitions to a status of Offline.

**Related information...**

*Sample Access Line operation*, page 46

## Deactivate pause mode

| | |
|---|---|
| **Prerequisite** | The **Online/Offline** button is illuminated steady yellow. |
| **Required module status** | Pause |

Perform this procedure to deactivate pause mode on the Sample Access Line (SAL).

When the SAL is paused, all processes running in the module stop. However, the connection to the Track Sample Manager remains intact. CARs are still routed to the module.

1. On the main menu, tap the **End Pause** button .
2. Wait for the module to transition to a status of Online.

The signal lamp is illuminated steady green. The module resumes operation. The **Pause** button is displayed.

**Related information...**

*Sample Access Line operation*, page 46

## Restart the Sample Access Line

Perform this procedure to restart the module if the user interface (UI) is no longer responding.

1. Before restarting the module, ensure that all analyses have been completed.

   **CAUTION:** Restarting the Sample Access Line (SAL) while the analyzer is processing samples presents a health risk to patients and test results. Ensure that all aspirations have been completed before restarting the SAL. During initialization, CARs may be released from AccessPoints and can potentially cause incorrect aspirations or spilled samples.

2. At the rear of the UI, press the Reset button [1].

   **Figure 4: Reset button**

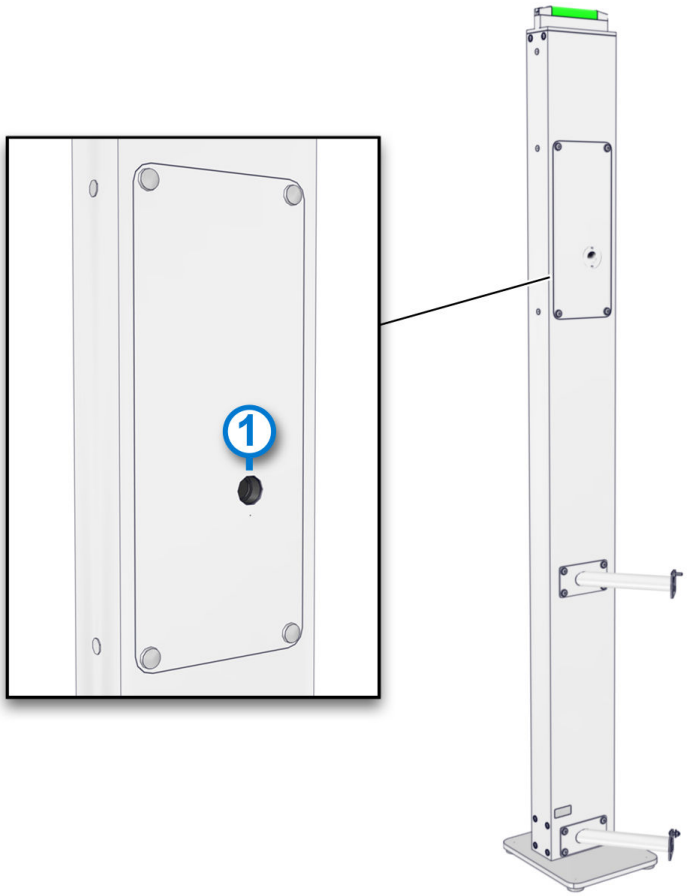


**Related information...**

*Sample Access Line operation*, page 46

# Main menu screen element descriptions

The main menu on the Sample Access Line displays the following screen elements.

## Elements

| | |
|---|---|
| | The **Information** button navigates to connection status information. |
| | The **Configuration** button navigates to configuration settings. |
| | The **Pause** button pauses system operation. |
| | The **Online/Offline** button with pause function places the module online, places the module offline, and pauses the module. |

**Related information...**

*Sample Access Line operation*, page 46

# Login screen

The Login screen for the configuration manager is displayed if a login and password have been defined during installation.

**Figure 5: Login screen**

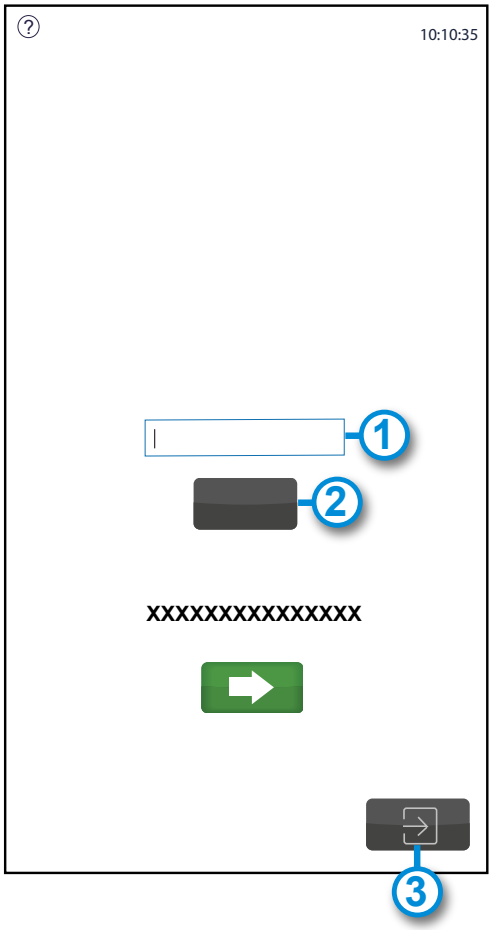


1. **Input** text box
2. **Set** button
3. **Exit** button

**Related information...**

*Sample Access Line operation*, page 46

## Access the Login screen

| | |
|---|---|
| **Prerequisite** | A password was defined during installation.<br>**NOTE:** The **Login** button is available only to an Abbott Laboratories representative or an authorized service representative. |

| | |
|---|---|
| **Required module status** | Online or Offline |

Perform this procedure to access the Login screen.

**NOTE:** Configuration of the operator login is performed by an Abbott Laboratories representative or an authorized service representative.

1. On the main menu, tap the **Login** button .
2. On the Login screen, enter the login information.
3. To return to the main menu, tap the **Exit** button.

**Related information...**

*Sample Access Line operation*, page 46

# Information screen element descriptions

The Information screen displays the **General Info** tab, the **Components** tab, and the **Notification History** tab.

## Elements

| | |
|---|---|
| **General Info tab** | Displays the following information:<br>• Device status<br>• Control panels for changing the device status<br>• Configuration<br>• Error messages<br>• Warnings |
| **Components tab** | Displays a list of connected components. |
| **Notification History tab** | Displays a list of messages for the module. |
| **Information on configuration and device status** | Displays information on configuration and device status. |

## Function button

| | |
|---|---|
| **Exit** | Saves the changes and navigates to the main menu. |

**Related information...**

*Sample Access Line operation*, page 46

## Access the Information screen

| | |
|---|---|
| **Required module status** | Online or Offline |

Perform this procedure to access the Information screen.

1. On the main menu, tap the **Information** button .
2. On the Information screen, tap the **Exit** button to return to the main menu.

**Related information...**

*Sample Access Line operation*, page 46

## Access the Configuration screen

| | |
|---|---|
| **Required module status** | Online or Offline |

Perform this procedure to access the Configuration screen.

1. On the main menu, tap the **Configuration** button .
2. On the Configuration screen, tap the **Exit** button to return to the main menu.

**Related information...**

*Sample Access Line operation*, page 46

## Error message screen

The Error message screen provides information about errors that occur on the system.

**Figure 6: Error message screen**

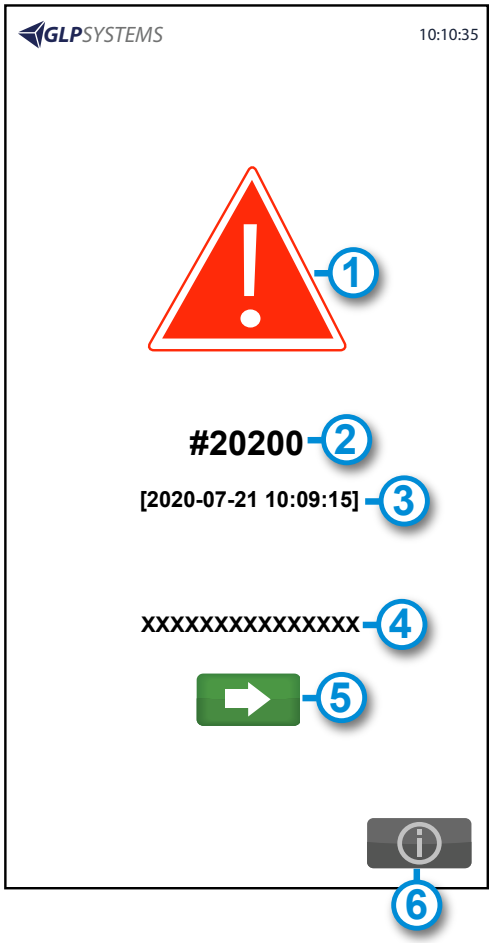


**Legend:**

1. Warning symbol
2. Error code
3. Date and time of error
4. Information text
5. **Next** button
6. **Information** button

**Related information...**

*Sample Access Line operation*, page 46

## Acknowledge an error message

Perform this procedure to acknowledge an error message.

1. On the Error message screen, tap the **Next** button.

2. In the Solutions window, tap a solution option.

**Related information...**

*Sample Access Line operation*, page 46

## Acknowledge a message

Perform this procedure to acknowledge a message. Messages can be displayed on any menu screen.

- On the menu screen, tap the message to acknowledge it.

The message is transferred to the **Notification History** tab. The displayed screen does not change.

**Related information...**

*Sample Access Line operation*, page 46

# Weekly cleaning procedure

A weekly cleaning procedure is required on the Sample Access Line.

**Related information...**

*Alinity ci-series SAL*, page 39
*Clean the monitor*, page 58

## Clean the monitor

| | |
|---|---|
| **Required materials** | • Laboratory-grade surface disinfectant<br>• Lint-free cloth |
| **Required module status** | Offline |

Perform this weekly procedure to clean the monitor.

1. Dampen a lint-free cloth with a surface disinfectant.
2. Carefully wipe the entire surface area of the monitor to remove any dust.

**Related information...**

*Weekly cleaning procedure*, page 58

# Error messages

Message codes and error messages are displayed on the touchscreen user interface when errors occur. Error messages provide information about conditions or errors of system operation. If an error cannot be resolved, contact an Abbott Laboratories representative or an authorized service representative.

**NOTE:** Corrective actions for error messages may involve hazardous activity. Use caution to minimize operator exposure and to prevent personal injury or system damage.

**Related information...**

*Alinity ci-series SAL*, page 39
*Communication and software update error messages (0-10000)*, page 59
*Module component error messages (20000-29999)*, page 62

## Communication and software update error messages (0-10000)

The communication and software update error message category includes message codes from 0 through 10000.

**Related information...**

*Error messages*, page 59
*0*, page 59
*100*, page 60
*101*, page 60
*105*, page 60
*106*, page 60
*107*, page 61
*108*, page 61
*109*, page 61

### Message code: 0

Solution file missing!

| Probable cause | Corrective action |
|---|---|
| An error has occurred. | 1. Correct the error by following the instructions on the touchscreen user interface.<br>2. If the error cannot be corrected, contact an Abbott Laboratories representative or an authorized service representative. |

**Related information...**

*Communication and software update error messages (0-10000)*, page 59

### Message code: 100

System error

| Probable cause | Corrective action |
|---|---|
| An error has occurred. | 1. Correct the error by following the instructions on the touchscreen user interface.<br>2. If the error cannot be corrected, contact an Abbott Laboratories representative or an authorized service representative. |

**Related information...**

*Communication and software update error messages (0-10000)*, page 59

### Message code: 101

Invalid Product Code

| Probable cause | Corrective action |
|---|---|
| An error has occurred. | 1. Correct the error by following the instructions on the touchscreen user interface.<br>2. If the error cannot be corrected, contact an Abbott Laboratories representative or an authorized service representative. |

**Related information...**

*Communication and software update error messages (0-10000)*, page 59

### Message code: 105

Out of memory.

| Probable cause | Corrective action |
|---|---|
| An error has occurred. | 1. Correct the error by following the instructions on the touchscreen user interface.<br>2. If the error cannot be corrected, contact an Abbott Laboratories representative or an authorized service representative. |

**Related information...**

*Communication and software update error messages (0-10000)*, page 59

### Message code: 106

Invalid JSON data structure

| Probable cause | Corrective action |
|---|---|
| An error has occurred. | 1. Correct the error by following the instructions on the touchscreen user interface.<br>2. If the error cannot be corrected, contact an Abbott Laboratories representative or an authorized service representative. |

**Related information...**

*Communication and software update error messages (0-10000)*, page 59

## Message code: 107

Unknown message type received.

| Probable cause | Corrective action |
|---|---|
| An error has occurred. | 1. Correct the error by following the instructions on the touchscreen user interface.<br>2. If the error cannot be corrected, contact an Abbott Laboratories representative or an authorized service representative. |

**Related information...**

*Communication and software update error messages (0-10000)*, page 59

## Message code: 108

Json protocol version mismatch

| Probable cause | Corrective action |
|---|---|
| An error has occurred. | 1. Correct the error by following the instructions on the touchscreen user interface.<br>2. If the error cannot be corrected, contact an Abbott Laboratories representative or an authorized service representative. |

**Related information...**

*Communication and software update error messages (0-10000)*, page 59

## Message code: 109

Json cheksum error

| Probable cause | Corrective action |
|---|---|
| An error has occurred. | 1. Correct the error by following the instructions on the touchscreen user interface. |

| Probable cause | Corrective action |
|---|---|
| | 2. If the error cannot be corrected, contact an Abbott Laboratories representative or an authorized service representative. |

**Related information...**

*Communication and software update error messages (0-10000)*, page 59

## Module component error messages (20000-29999)

The module component error message category includes message codes from 20000 through 29999.

**Related information...**

*Error messages*, page 59
*20105*, page 63
*20200*, page 63
*20201*, page 63
*20202*, page 64
*20203*, page 64
*20204*, page 64
*20205*, page 64
*20206*, page 65
*20207*, page 65
*20209*, page 65
*20210*, page 66
*20211*, page 66
*20901*, page 66
*20902*, page 67
*20910*, page 67
*20911*, page 67
*20912*, page 67
*Archive error messages (21300-21468)*, page 68
*22501*, page 70
*22502*, page 70
*22550*, page 70
*22600*, page 71
*22601*, page 71
*22602*, page 71
*22603*, page 72

*22604*, page 72
*22605*, page 72
*22606*, page 73
*22607*, page 73
*22608*, page 73
*Display error messages (23000-23017)*, page 73
*27000*, page 75

## Message code: 20105

Solution not handled

| Probable cause | Corrective action |
|---|---|
| An error has occurred. | 1. Correct the error by following the instructions on the touchscreen user interface.<br>2. If the error cannot be corrected, contact an Abbott Laboratories representative or an authorized service representative. |

**Related information...**

*Module component error messages (20000-29999)*, page 62

## Message code: 20200

Accesspoint connection problem

| Probable cause | Corrective action |
|---|---|
| An error has occurred. | 1. Correct the error by following the instructions on the touchscreen user interface.<br>2. If the error cannot be corrected, contact an Abbott Laboratories representative or an authorized service representative. |

**Related information...**

*Module component error messages (20000-29999)*, page 62

## Message code: 20201

Accesspoint does not respond

| Probable cause | Corrective action |
|---|---|
| An error has occurred. | 1. Correct the error by following the instructions on the touchscreen user interface.<br>2. If the error cannot be corrected, contact an Abbott Laboratories representative or an authorized service representative. |

**Related information...**

*Module component error messages (20000-29999)*, page 62

## Message code: 20202

Accesspoint fault

| Probable cause | Corrective action |
|---|---|
| An error has occurred. | 1. Correct the error by following the instructions on the touchscreen user interface.<br>2. If the error cannot be corrected, contact an Abbott Laboratories representative or an authorized service representative. |

**Related information...**

*Module component error messages (20000-29999)*, page 62

## Message code: 20203

Accesspoint hardware failure

| Probable cause | Corrective action |
|---|---|
| An error has occurred. | 1. Correct the error by following the instructions on the touchscreen user interface.<br>2. If the error cannot be corrected, contact an Abbott Laboratories representative or an authorized service representative. |

**Related information...**

*Module component error messages (20000-29999)*, page 62

## Message code: 20204

The Accesspoint restarted unexpectedly

| Probable cause | Corrective action |
|---|---|
| An error has occurred. | 1. Correct the error by following the instructions on the touchscreen user interface.<br>2. If the error cannot be corrected, contact an Abbott Laboratories representative or an authorized service representative. |

**Related information...**

*Module component error messages (20000-29999)*, page 62

## Message code: 20205

Accesspoint initialization timeout

| Probable cause | Corrective action |
|---|---|
| An error has occurred. | 1. Correct the error by following the instructions on the touchscreen user interface.<br>2. If the error cannot be corrected, contact an Abbott Laboratories representative or an authorized service representative. |

**Related information...**

*Module component error messages (20000-29999)*, page 62

## Message code: 20206

NFC read problems

| Probable cause | Corrective action |
|---|---|
| An error has occurred. | 1. Correct the error by following the instructions on the touchscreen user interface.<br>2. If the error cannot be corrected, contact an Abbott Laboratories representative or an authorized service representative. |

**Related information...**

*Module component error messages (20000-29999)*, page 62

## Message code: 20207

Carriers could not be caught

| Probable cause | Corrective action |
|---|---|
| An error has occurred. | 1. Correct the error by following the instructions on the touchscreen user interface.<br>2. If the error cannot be corrected, contact an Abbott Laboratories representative or an authorized service representative. |

**Related information...**

*Module component error messages (20000-29999)*, page 62

## Message code: 20209

Catch position too tight

| Probable cause | Corrective action |
|---|---|
| An error has occurred. | 1. Correct the error by following the instructions on the touchscreen user interface. |

| Probable cause | Corrective action |
|---|---|
| | 2. If the error cannot be corrected, contact an Abbott Laboratories representative or an authorized service representative. |

**Related information...**

*Module component error messages (20000-29999)*, page 62

## Message code: 20210

The Access Point lost too many Cars

| Probable cause | Corrective action |
|---|---|
| An error has occurred. | 1. Correct the error by following the instructions on the touchscreen user interface.<br>2. If the error cannot be corrected, contact an Abbott Laboratories representative or an authorized service representative. |

**Related information...**

*Module component error messages (20000-29999)*, page 62

## Message code: 20211

Access Point did not respond

| Probable cause | Corrective action |
|---|---|
| An error has occurred. | 1. Correct the error by following the instructions on the touchscreen user interface.<br>2. If the error cannot be corrected, contact an Abbott Laboratories representative or an authorized service representative. |

**Related information...**

*Module component error messages (20000-29999)*, page 62

## Message code: 20901

Teach positions not valid

| Probable cause | Corrective action |
|---|---|
| An error has occurred. | 1. Correct the error by following the instructions on the touchscreen user interface.<br>2. If the error cannot be corrected, contact an Abbott Laboratories representative or an authorized service representative. |

**Related information...**

*Module component error messages (20000-29999)*, page 62

### Message code: 20902

Invalid reference positions!

| Probable cause | Corrective action |
|---|---|
| An error has occurred. | 1. Correct the error by following the instructions on the touchscreen user interface.<br>2. If the error cannot be corrected, contact an Abbott Laboratories representative or an authorized service representative. |

**Related information...**

*Module component error messages (20000-29999)*, page 62

### Message code: 20910

Invalid JSON checksum.

| Probable cause | Corrective action |
|---|---|
| An error has occurred. | 1. Correct the error by following the instructions on the touchscreen user interface.<br>2. If the error cannot be corrected, contact an Abbott Laboratories representative or an authorized service representative. |

**Related information...**

*Module component error messages (20000-29999)*, page 62

### Message code: 20911

Inplausible reference position!

| Probable cause | Corrective action |
|---|---|
| An error has occurred. | 1. Correct the error by following the instructions on the touchscreen user interface.<br>2. If the error cannot be corrected, contact an Abbott Laboratories representative or an authorized service representative. |

**Related information...**

*Module component error messages (20000-29999)*, page 62

### Message code: 20912

A component has a wrong fw version.

| Probable cause | Corrective action |
|---|---|
| An error has occurred. | 1. Correct the error by following the instructions on the touchscreen user interface.<br>2. If the error cannot be corrected, contact an Abbott Laboratories representative or an authorized service representative. |

**Related information...**

*Module component error messages (20000-29999)*, page 62

## Archive error messages (21300-21468)

The archive error message category includes message codes from 21300 through 21468.

**Related information...**

*Module component error messages (20000-29999)*, page 62
*21370*, page 68
*21371*, page 68
*21372*, page 69
*21373*, page 69
*21374*, page 69
*21375*, page 70

### Message code: 21370

RFID Time out

| Probable cause | Corrective action |
|---|---|
| An error has occurred. | 1. Correct the error by following the instructions on the touchscreen user interface.<br>2. If the error cannot be corrected, contact an Abbott Laboratories representative or an authorized service representative. |

**Related information...**

*Archive error messages (21300-21468)*, page 68

### Message code: 21371

RFID CAN Failure

| Probable cause | Corrective action |
|---|---|
| An error has occurred. | 1. Correct the error by following the instructions on the touchscreen user interface. |

| Probable cause | Corrective action |
|---|---|
| | 2. If the error cannot be corrected, contact an Abbott Laboratories representative or an authorized service representative. |

**Related information...**

*Archive error messages (21300-21468)*, page 68

### Message code: 21372

RFID Hardware Error

| Probable cause | Corrective action |
|---|---|
| An error has occurred. | 1. Correct the error by following the instructions on the touchscreen user interface.<br>2. If the error cannot be corrected, contact an Abbott Laboratories representative or an authorized service representative. |

**Related information...**

*Archive error messages (21300-21468)*, page 68

### Message code: 21373

RFID Read Error

| Probable cause | Corrective action |
|---|---|
| An error has occurred. | 1. Correct the error by following the instructions on the touchscreen user interface.<br>2. If the error cannot be corrected, contact an Abbott Laboratories representative or an authorized service representative. |

**Related information...**

*Archive error messages (21300-21468)*, page 68

### Message code: 21374

RFID Write Error

| Probable cause | Corrective action |
|---|---|
| An error has occurred. | 1. Correct the error by following the instructions on the touchscreen user interface.<br>2. If the error cannot be corrected, contact an Abbott Laboratories representative or an authorized service representative. |

**Related information...**

*Archive error messages (21300-21468)*, page 68

### Message code: 21375

RFID Runtime Error

| Probable cause | Corrective action |
|---|---|
| An error has occurred. | 1. Correct the error by following the instructions on the touchscreen user interface.<br>2. If the error cannot be corrected, contact an Abbott Laboratories representative or an authorized service representative. |

**Related information...**

*Archive error messages (21300-21468)*, page 68

### Message code: 22501

Communication error $0 between $1 and $2

| Probable cause | Corrective action |
|---|---|
| An error has occurred. | 1. Correct the error by following the instructions on the touchscreen user interface.<br>2. If the error cannot be corrected, contact an Abbott Laboratories representative or an authorized service representative. |

**Related information...**

*Module component error messages (20000-29999)*, page 62

### Message code: 22502

Parameter redundancy of access point $0 must be at least $1.

| Probable cause | Corrective action |
|---|---|
| An error has occurred. | 1. Correct the error by following the instructions on the touchscreen user interface.<br>2. If the error cannot be corrected, contact an Abbott Laboratories representative or an authorized service representative. |

**Related information...**

*Module component error messages (20000-29999)*, page 62

### Message code: 22550

Device specific error #$0 occurred.

| Probable cause | Corrective action |
|---|---|
| An error has occurred. | 1. Correct the error by following the instructions on the touchscreen user interface.<br>2. If the error cannot be corrected, contact an Abbott Laboratories representative or an authorized service representative. |

**Related information...**

*Module component error messages (20000-29999)*, page 62

## Message code: 22600

Potential contamination

| Probable cause | Corrective action |
|---|---|
| An error has occurred. | 1. Correct the error by following the instructions on the touchscreen user interface.<br>2. If the error cannot be corrected, contact an Abbott Laboratories representative or an authorized service representative. |

**Related information...**

*Module component error messages (20000-29999)*, page 62

## Message code: 22601

Potential contamination

| Probable cause | Corrective action |
|---|---|
| An error has occurred. | 1. Correct the error by following the instructions on the touchscreen user interface.<br>2. If the error cannot be corrected, contact an Abbott Laboratories representative or an authorized service representative. |

**Related information...**

*Module component error messages (20000-29999)*, page 62

## Message code: 22602

Duplicate acquisition start, potential contamination

| Probable cause | Corrective action |
|---|---|
| An error has occurred. | 1. Correct the error by following the instructions on the touchscreen user interface. |

| Probable cause | Corrective action |
|---|---|
| | 2. If the error cannot be corrected, contact an Abbott Laboratories representative or an authorized service representative. |

**Related information...**

*Module component error messages (20000-29999)*, page 62

### Message code: 22603

Status change to Unknown while aspirating

| Probable cause | Corrective action |
|---|---|
| An error has occurred. | 1. Correct the error by following the instructions on the touchscreen user interface.<br>2. If the error cannot be corrected, contact an Abbott Laboratories representative or an authorized service representative. |

**Related information...**

*Module component error messages (20000-29999)*, page 62

### Message code: 22604

Status change to Unknown with samples in queue

| Probable cause | Corrective action |
|---|---|
| An error has occurred. | 1. Correct the error by following the instructions on the touchscreen user interface.<br>2. If the error cannot be corrected, contact an Abbott Laboratories representative or an authorized service representative. |

**Related information...**

*Module component error messages (20000-29999)*, page 62

### Message code: 22605

Failed to switch to offline mode

| Probable cause | Corrective action |
|---|---|
| An error has occurred. | 1. Correct the error by following the instructions on the touchscreen user interface.<br>2. If the error cannot be corrected, contact an Abbott Laboratories representative or an authorized service representative. |

**Related information...**

*Module component error messages (20000-29999)*, page 62

### Message code: 22606

An analyzer mode must be switched offline

| Probable cause | Corrective action |
|---|---|
| An error has occurred. | 1. Correct the error by following the instructions on the touchscreen user interface.<br>2. If the error cannot be corrected, contact an Abbott Laboratories representative or an authorized service representative. |

**Related information...**

*Module component error messages (20000-29999)*, page 62

### Message code: 22607

LAS.GLP connection cannot be established

| Probable cause | Corrective action |
|---|---|
| An error has occurred. | 1. Correct the error by following the instructions on the touchscreen user interface.<br>2. If the error cannot be corrected, contact an Abbott Laboratories representative or an authorized service representative. |

**Related information...**

*Module component error messages (20000-29999)*, page 62

### Message code: 22608

Connection towards the analyzer cannot be established

| Probable cause | Corrective action |
|---|---|
| An error has occurred. | 1. Correct the error by following the instructions on the touchscreen user interface.<br>2. If the error cannot be corrected, contact an Abbott Laboratories representative or an authorized service representative. |

**Related information...**

*Module component error messages (20000-29999)*, page 62

## Display error messages (23000-23017)

The display error message category includes message codes from 23000 through 23017.

**Related information...**

*Module component error messages (20000-29999)*, page 62
*23000*, page 74
*23001*, page 74
*23002*, page 74
*23003*, page 75
*23004*, page 75

### Message code: 23000

Requested dialog file for id $0 could not be found

| Probable cause | Corrective action |
|---|---|
| An error has occurred. | 1. Correct the error by following the instructions on the touchscreen user interface.<br>2. If the error cannot be corrected, contact an Abbott Laboratories representative or an authorized service representative. |

**Related information...**

*Display error messages (23000-23017)*, page 73

### Message code: 23001

No dialog options found.

| Probable cause | Corrective action |
|---|---|
| An error has occurred. | 1. Correct the error by following the instructions on the touchscreen user interface.<br>2. If the error cannot be corrected, contact an Abbott Laboratories representative or an authorized service representative. |

**Related information...**

*Display error messages (23000-23017)*, page 73

### Message code: 23002

Unknown dialog type for dialogId $0 received by display.

| Probable cause | Corrective action |
|---|---|
| An error has occurred. | 1. Correct the error by following the instructions on the touchscreen user interface.<br>2. If the error cannot be corrected, contact an Abbott Laboratories representative or an authorized service representative. |

**Related information...**

*Display error messages (23000-23017)*, page 73

### Message code: 23003

Invalid dialogId $0 received by display.

| Probable cause | Corrective action |
|---|---|
| An error has occurred. | 1. Correct the error by following the instructions on the touchscreen user interface.<br>2. If the error cannot be corrected, contact an Abbott Laboratories representative or an authorized service representative. |

**Related information...**

*Display error messages (23000-23017)*, page 73

### Message code: 23004

Unknown display dialog error for dialogId $0 occured

| Probable cause | Corrective action |
|---|---|
| An error has occurred. | 1. Correct the error by following the instructions on the touchscreen user interface.<br>2. If the error cannot be corrected, contact an Abbott Laboratories representative or an authorized service representative. |

**Related information...**

*Display error messages (23000-23017)*, page 73

### Message code: 27000

CAR needs maintenance.

| Probable cause | Corrective action |
|---|---|
| An error has occurred. | 1. Correct the error by following the instructions on the touchscreen user interface.<br>2. If the error cannot be corrected, contact an Abbott Laboratories representative or an authorized service representative. |

**Related information...**

*Module component error messages (20000-29999)*, page 62

# Error message on the touchscreen user interface

| Probable cause | Corrective action |
|---|---|
| An error occurred. | 1. Follow the error message on the touchscreen user interface.<br>2. Contact an Abbott Laboratories representative or an authorized service representative if necessary. |

**Related information...**

*Alinity ci-series SAL*, page 39

# CAR with sample at AccessPoint, in traffic jam, or in long queue; sample matter has been removed

| Probable cause | Corrective action |
|---|---|
| The analysis of the sample in the CAR at the AccessPoint is not yet completed. | 1. Leave the CAR with the sample at the AccessPoint.<br>2. Compare the sample bar code in the CAR to the bar code displayed on the touchscreen user interface of the analyzer.<br>3. Leave the sample in the CAR until the analysis is completed. |
| The analyzer is not ready for operation or is defective. | 1. Leave the CAR with the sample at the AccessPoint.<br>2. Compare the sample bar code in the CAR to the bar code displayed on the touchscreen user interface of the analyzer. Verify that the analysis has been completed for the sample.<br>3. Resolve the error on the analyzer. |
| An error occurred at the AccessPoint or Sample Access Line (SAL). | If all analyses have been completed, perform one of the following steps:<br>• Follow any instructions displayed on the touchscreen user interface.<br>• Perform one of the following steps to reset the SAL controller manually:<br>– Press the Reset push button for 3 seconds.<br>– If a CAR is not released automatically after a manual reset is performed, remove the CAR from the AccessPoint.<br>If the error continues, contact an Abbott Laboratories representative or an authorized service representative. |

**Related information...**

*Alinity ci-series SAL*, page 39

# NOTES

## Revision history

| Document control numbers | Revision date | Content revised |
|---|---|---|
| 80003970-101 DRAFT | 2022-MM-DD | Original release |

# NOTES

# Index


## A

accessing
  Configuration screen, 55
  Information screen, 55
  Login screen, 53
AccessPoints
  description of, 11
acknowledging
  error message, 56
  message, 57
as-needed cleaning procedures
  clean the AccessPoint, 30
  clean the guiding slot, 30
  clean the lane elements, 29
  clean the track hood, 30
  Sample Access Line (SAL), 29

## B

bar code reader
  description of, 10
barcode reader
  cleaning, 31
buttons
  description of, 46

## C

cleaning
  AccessPoint, 30
  barcode reader, 31
  guiding slot, 30
  lane elements, 29
  track hood, 30
cleaning and maintenance
  description of, 28
Configuration screen
  accessing, 55

## D

deactivating
  pause mode on SAL, 50

## E

element descriptions
  Information screen, 54
  Main menu screen, 52
error message
  acknowledging, 56
Error message screen
  description of, 55
error messages
  description of, 59
errors and troubleshooting
  description of, 36

## G

general safety information
  overview, 6

## H

hazards
  overview, 25

## I

Information screen
  accessing, 55
  element descriptions, 54
installation procedures and special requirements
  overview, 13

## L

locking
  track hoods, 34
Login screen
  accessing, 53
  description of, 52

## M

Main menu screen
  element descriptions, 52
maintenance checks
  Sample Access Line (SAL), 28
message
  acknowledging, 57

## O

operating element
  description of, 42
operating instructions
  overview, 21
operational precautions and limitations
  overview, 23

## P

pausing
  SAL, 50
performance characteristics and specifications
  overview, 19
placing
  SAL offline, 49
  SAL online, 49
powering on
  SAL, 48
principles of operation
  overview, 17

## R

read me first
  overview, 5
restarting
  SAL, 51
revision history
  content revised, 79
  revision date, 79

## S

safety features
  description of, 8, 43
Sample Access Line
  description of, 40
  illustration of, 40
  installation requirements, 15
Sample Access Line (SAL)
  deactivating pause mode, 50
  maintenance checks, 28
  pausing, 50
  placing offline, 49
  placing online, 49
  powering on, 48
  restarting, 51
  technical data, 45
Sample Access Line operation
  description of, 46
service, maintenance, and diagnostics
  overview, 27
software
  description of, 12
Start screen
  description of, 47

## T

technical data
  Sample Access Line (SAL), 45
throughput
  description of, 9
track hoods
  locking, 34
  unlocking, 34
transportation, installation, disassembly, and disposal
  description of, 14
Troubleshooting
  overview, 33

## U

unlocking
  track hoods, 34
use or function
  overview, 7

## W

weekly cleaning procedure
  Sample Access Line (SAL), 58
workflow
  description of, 42

Abbott