SEE ELECTRONIC REVISION HISTORY REPORT

NOTES: UNLESS OTHERWISE SPECIFIED

PURCHASED LABEL

1. PRINT PER LABEL CONTENT SHOWN.

2. PRINTING SPECIFICATION:

INK COLOR -	BLACK
BACKGROUND -	WHITE
MATERIAL -	2mil POLYESTER with 1 mil CLEAR OVERCOAT
ADHESIVE -	1.8 mil #350 ACRYLIC
LABEL SIZE -	2.0 x 1.0 ± .02
CORNER RADIUS -	.05 ± .02
ROLL SIZE -	500, MAX

3. INNER DIE CUT: 1.25 x 0.5 ± .02

4. DIE CUT TO LINER.
PERFORATING LINER BETWEEN LABELS IS OPTIONAL.
PART NUMBER TO BE PRINTED ON THE WASTE MATRIX.

5. LABEL MUST CONFORM TO UL 969 AND SHALL BE UL APPROVED MATERIAL WITH SUPPLIER NAME AND LABEL NAME OR DESIGNATION ON INSIDE OF ROLL CORE.

6. LABEL MUST BE PROCURED FROM UL AUTHORIZED SUPPLIER.

7. REFERENCE S14913.

8. THIS PART IS A U.L. CRITICAL PART. ANY CHANGES TO THIS PART MUST BE APPROVED BY EMC/SAFETY GROUP.

9. THIS PART/ASSEMBLY SHALL BE COMPLIANT PER THE LATEST REVISION OF ABBOTT SPECIFICATION S205053.

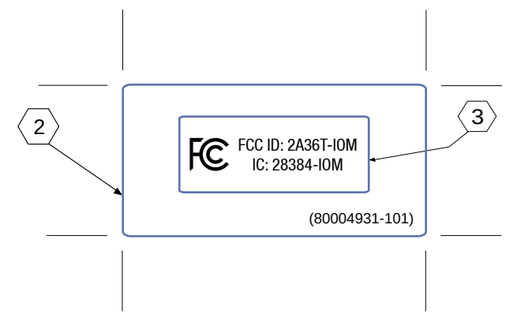

CONFIDENTIAL INFORMATION

CONTAINS TRADE SECRET AND/OR CONFIDENTIAL INFORMATION WHICH IS THE PROPERTY OF ABBOTT LABORATORIES. AS PROVIDED BY 21CFR 20.61. DO NOT DISCLOSE TO THE PUBLIC.

UNLESS OTHERWISE SPECIFIED:

DIMENSIONS IN INCHES
TOLERANCES
.XX ± .02
.XXX ± .010
ANGULAR ± 2°
63

THREADS CLASS 2A OR 2B REMOVE BURRS AND SHARP EDGES .02 MAX.

DWN BY: S. Goldston
DATE: 07/14/22

MATERIAL: 2

APPLIED FINISH: None

ABBOTT DIAGNOSTIC DIVISION
ABBOTT LABORATORIES
1921 HURD DRIVE IRVING, TEXAS 75038, USA

TITLE: LABEL, IOM FCC - IC ID

SCALE	SIZE	DWG NO.	REV.
1/1	B	80004931-101	A

DO NOT SCALE DRAWING

SHEET 1 OF 1

Front View
GLPSYSTEMS

FCC/IC Label Location
Front View Transparent
Hood Open

GLP systems Track
SN
REF
Abbott Automation
Solutions GmbH
Sachsenkamp 5
20097 HAMBURG
GERMANY
Product of Germany
(20034347-B)
AC 230V-240V ~50/60 Hz
net power Pnp 68 W /
Pmax 160 W
(01) 00380740186715
(21) M09B000200
(240) 06Q07-11
Abbott
FCC/IC Label Location
(Permanent acrylic
Adhesive)