Abbott

Recapper Module

Supplemental Manual

For use with the GLP systems Track Laboratory Automation System and the Recapper Module

80004210-101 DRAFT

Table of contents

Read me first.....5
General safety information.....7
Proprietary statement.....8
Section 1: Use or function.....9
Recapper Module overview.....10
Design and function.....10
Descriptions of module statuses.....17
Section 2: Installation procedures and special requirements.....19
Recapper Module installation requirements.....20
Main menu screen.....22
Login screen.....22
Information screen.....24
Configuration screen.....24
Section 3: Principles of operation.....27
Section 4: Performance characteristics and specifications.....29
Technical data.....30
Sample processing specifications.....31
Section 5: Operating instructions.....33
Recapper Module operation.....34
Open and close the front and rear module covers.....34
Cycle power to the module.....36
Power on the module.....38
Power off the module.....39
Place the module online.....39
Place the module offline.....40
Pause the module.....40
Deactivate pause mode.....41
Replace revolvers.....41
Disable the supply of small tube or large tube ReCaps.....44
Enable the supply of small tube or large tube ReCaps.....44
Section 6: Operational precautions and limitations.....47
Section 7: Hazards.....49
Safety icons.....50
Section 8: Service, maintenance, and diagnostics.....53
Cleaning and maintenance checks.....54
Cleaning.....55
Weekly cleaning procedures.....55
As-needed cleaning procedures.....56
Maintenance.....60
As-needed maintenance procedures.....60

Section 9: Troubleshooting.....63
Message codes.....64
Message code screen.....65
Recapper Module observed problems.....86
CAR with sample does not move to the module.....86
CAR with sample is not held in place at the AccessPoint.....87
CAR stops at the AccessPoint and then will not move.....87
Samples are not sealed.....87
ReCaps are lost.....87
Error message is displayed.....88
Robot does not respond.....88
Pullout compartment does not open or close.....88
Samples stick to the clamping jaws.....88
Touchscreen user interface and push buttons do not respond.....89
Touchscreen user interface does not respond.....89
Module cover does not remain in position when opened.....89

Foreword

This supplemental manual is intended for the relevant laboratory staff operating the Recapper Module.

Ensure that this supplemental manual is read and understood before startup is performed.

This supplemental manual contains information on the Recapper Module properties and handling, and instructions and measures for maintaining its operational readiness.

The GLP systems Track laboratory automation system is a modular, customer-specific design. This supplemental manual refers only to the Recapper Module. Ensure that the manuals relating to each single component are observed. In addition, observe the manuals for the connected analyzers.

The Recapper Module may not be available in all countries. Contact your local representative for more information.

The features in this supplemental manual were introduced in software 3.0.X.

NOTE: An X in the software version number represents software changes that have no impact on this manual.

Original instructions of this manual are written in English. Other languages are translations of the original instructions.

For an electronic copy of this manual, go to corelaboratory.abbott/ifu.

For laboratory professional use only.

This manual is supplemental to the GLP systems Track Operations Manual. Refer to the GLP systems Track Operations Manual for the following information:

- System security
- Customer service
- Intended use
- Disclaimers
- GLP systems Track warranty statement for USA customers only
- GLP systems Track agency approvals
- Intellectual Property statement
- Key to symbols
- Manufacturer and distributor
- Covers, hoods, and sensors
- Requirements for handling the specimens
- Operator responsibility
- Biological hazards

- Precautions
- Spill cleanup
- Requirements for decontamination
- Glossary

Only use the operating instructions in the GLP systems Track Operations Manual with an Input/Output Module with list number (LN) 04Z96-02 or higher or a Tube Assessment Module with LN 04Z99-02 or higher. If necessary, contact an Abbott Laboratories representative or an authorized service representative.

Related information...

General safety information, page 7

Proprietary statement, page 8

General safety information

Before operating the Recapper Module, read and understand the safety information in this manual.

For information about actions or conditions that can affect system performance, carefully review the operational precautions and limitations in the GLP systems Track Operations Manual.

To become familiar with safety icons on the module and in this manual that indicate potentially hazardous situations, review the hazards in the GLP systems Track Operations Manual. Comply with the hazard and safety information to minimize the potential for harm to personnel and damage to the laboratory environment.

The sections for operational precautions and limitations and for hazards in the GLP systems Track Operations Manual contain supplemental information. Do not use the supplemental information to supersede workplace safety requirements. Review any significant differences between the supplemental information and the workplace safety requirements with management or a workplace safety representative.

This device complies with part 15 of the FCC Rules. Operation is subject to the following two conditions: (1) This device may not cause harmful interference, and (2) this device must accept any interference received, including interference that may cause unwanted operation.

This device complies with Industry Canada license-exempt RSS standards. Operation is subject to the following two conditions: (1) This device may not cause interference, and (2) this device must accept any interference, including interference that may cause unwanted operation of the device.

The Recapper Module is state-of-the-art. However, residual dangers exist. The safety instructions must be read and observed. The manufacturer accepts no liability for failure to observe the safety instructions.

Refer to the GLP systems Track Operations Manual for the complete listing of all safety information.

Related information...

Read me first, page 5

Proprietary statement

The Recapper Module system documentation (© 2023 Abbott. All rights reserved.) and software programs are protected by copyright.

The software and manual were developed solely for use with the laboratory automation system as specified in the operating instructions.

The information, documents and related graphics published herein (the "Information") are the sole property of Abbott Laboratories. Permission to use the Information is granted, provided that:

- the copyright notice appears on all copies;
- use of the Information is for operation of ABBOTT products by Abbott Laboratories trained personnel or informational use only;
- the Information is not modified in any way; and
- no graphics are used separate from accompanying text.

Each person assumes full responsibility and all risks arising from use of the Information herein. The Information is presented "AS IS" without warranties, either express or implied, and may include technical inaccuracies or typographical errors. Abbott Laboratories reserves the right to make additions, deletions, or modifications to the Information at any time without any prior notification.

Related information...

Read me first, page 5

Introduction

The GLP systems Track is a modular laboratory automation system (LAS) designed to automate pre-analytical and post-analytical processing, including sample handling, in order to automate sample processing in clinical laboratories. The system consolidates multiple analytical instruments into a unified workflow. This module includes a built-in touchscreen, a user interface that functions as a central operating and display element. The Recapper Module is a module of the GLP systems Track that may be included in an LAS configuration.

Related information...

Recapper Module overview, page 10

Recapper Module overview

The Recapper Module seals open sample tubes with caps called ReCaps.

A distinction is made between a Recapper Module and Recapper Module Double. The Recapper Module has one Recapper unit that consists of a robot, robot gripper, AccessPoint, separating sheet, and conveying tube. The Recapper Module Double is equipped with two Recapper units. Each unit includes a robot, robot gripper, AccessPoint, separating sheet, and conveying tube.

Related information...

Use or function, page 9
Design and function, page 10
Descriptions of module statuses, page 17

Design and function

The Recapper Module consists of the following components.

Figure 1: Exterior view of the Recapper Module

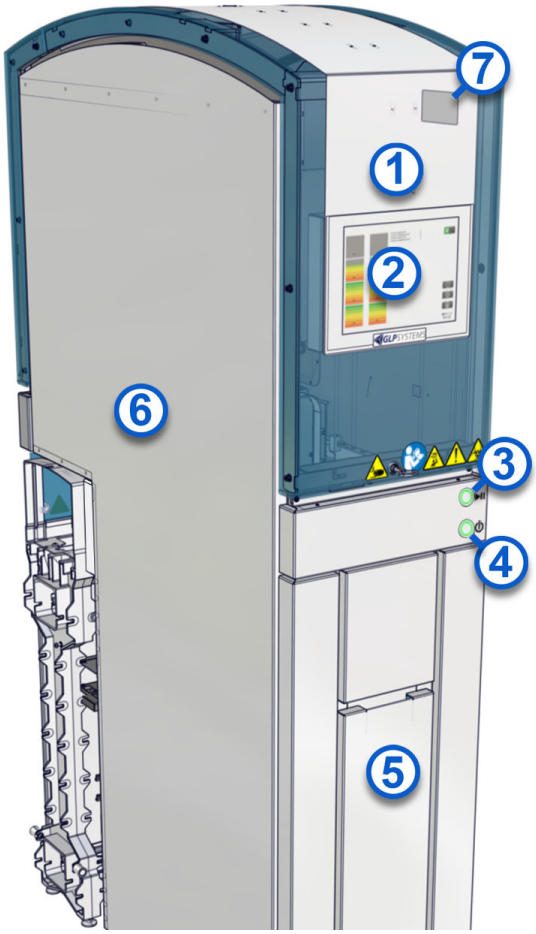

Legend:

1. Front module cover: Protects the operator from injury and keeps the sample platform free from dust. The cover can be opened from the front.

   CAUTION: Mind or watch your hands. The front and rear module covers can be opened **only** with the key and **only** by a trained operator. Before opening the module cover and reaching into the module, place the module offline. This action prevents the robot from moving after its initiated movement is completed. If the module is online when the module cover is opened, the robot slows down but does not stop. **Keep away from the moving robot and close the module covers as soon as possible.**

2. Monitor: Functions as the central operating and display element. The monitor is located on the front module cover.

   CAUTION: Damage from sharp and hard objects. Sharp and hard objects can damage the surface of the monitor.

3. Online/Offline push button with pause function: Transitions the module status to Online, Offline, or Pause.
4. On/Off Push button: Powers on and powers off the module.

5. Pullout compartment: Holds the revolvers with ReCaps.
6. Housing: Contains the module lane element, the AccessPoint with clamping jaws, and the conveying tube. Tubes are sealed with ReCaps in the interior of the housing.
7. Module serial number label: Located in the interior of the module.

Figure 2: Exterior rear view of the Recapper Module

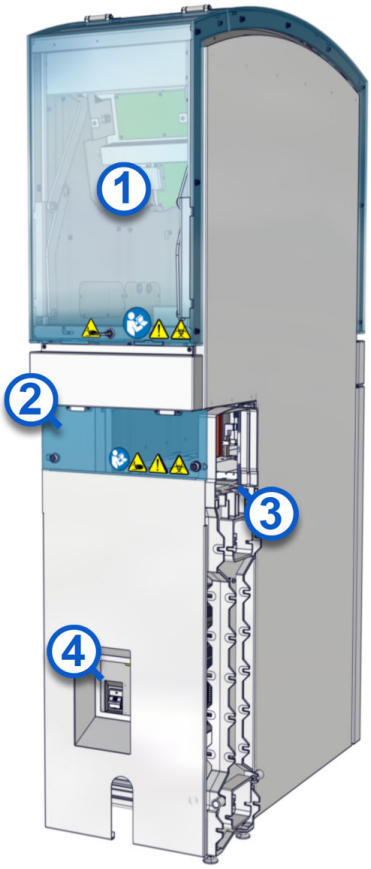

Legend:

1. Rear module cover: Protects the operator from injury and keeps the sample platform free from dust. The cover can be opened from the rear.

   CAUTION: Mind or watch your hands. The front and rear module covers can be opened **only** with the key and **only** by a trained operator. Before opening the module cover and reaching into the module, place the module offline. This action prevents the robot from moving after its initiated movement is completed. If the module is online when the module cover is opened, the robot slows down but does not stop. **Keep away from the moving robot and close the module covers as soon as possible.**
2. Module flap: Used to access the track inside the module.
3. Track element: Routes the CARs to the AccessPoint and then for archiving.
4. Power switches: Located at the rear of the module.

Figure 3: Module contact sensors

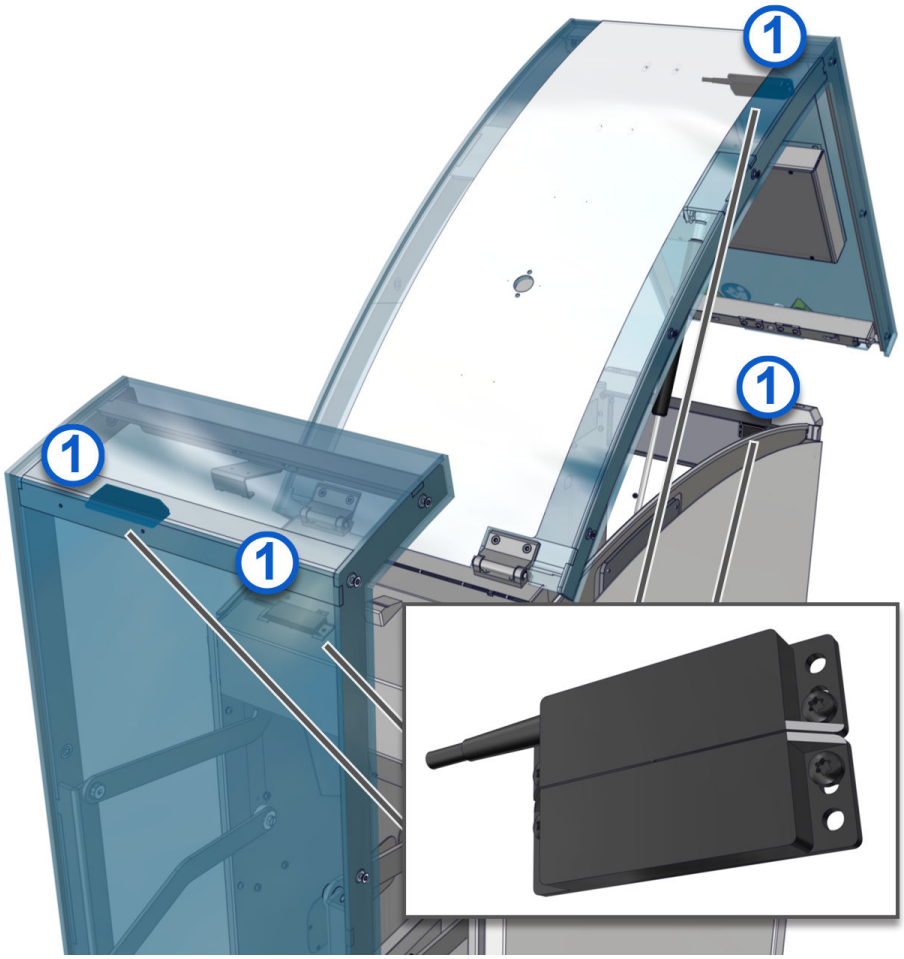

Legend:

1. Module contact sensors: Opening the module covers slows down the robot movement. The module covers and track hoods provide protection against direct access.

CAUTION: To prevent operator injury, the module status must be transitioned to Offline before the module interior is accessed.

Figure 4: Upper interior view of the Recapper Module

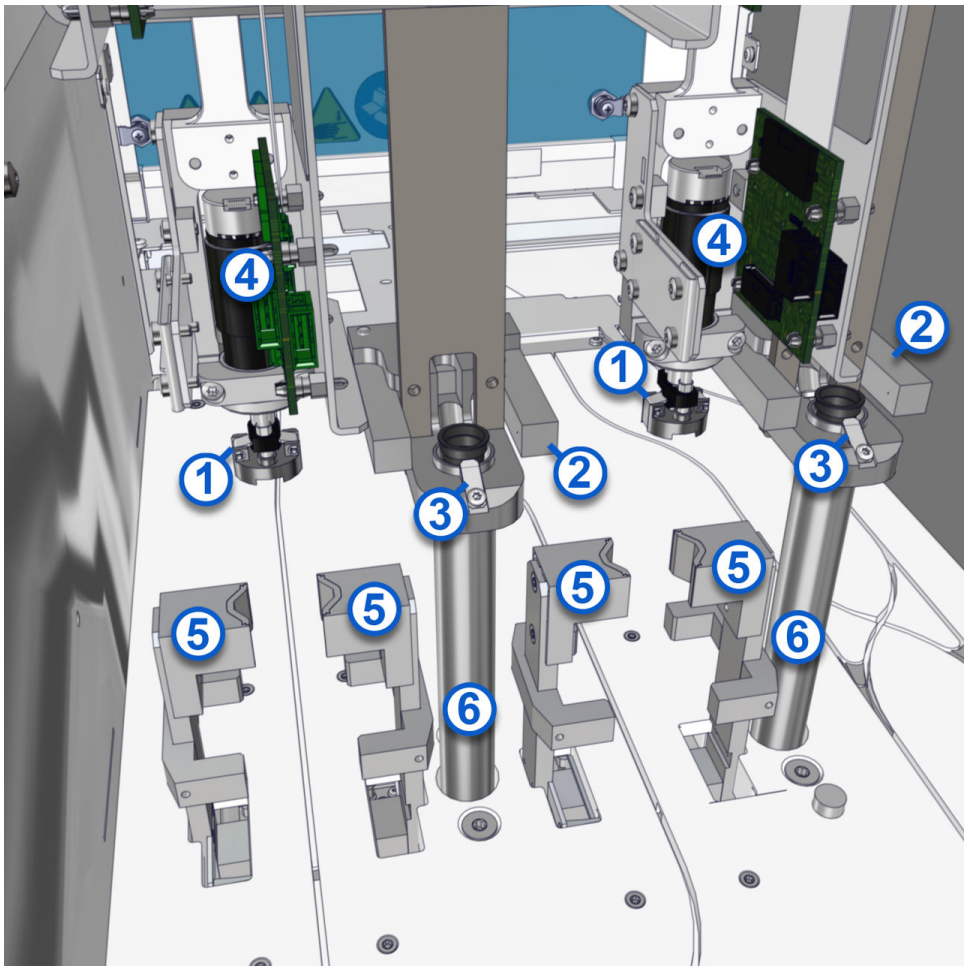

Legend:

1. Robot gripper: Removes the uppermost ReCap from the stack and seals the tube on the CARs. The robot gripper secures the removed ReCap in place by gripping below the ReCap collar.
2. Sensor on the conveying tube: Registers that a ReCap has reached the removal position and forwards this information to the control system.
3. Separating sheet: Holds the second highest ReCap on the stack during ReCap removal.
4. Robot: Removes the uppermost ReCap from the stack and seals the tube on the CARs.
5. AccessPoint with clamping jaws: Grips the sample with its clamping jaws while the tube is sealed.
6. Conveying tube with ReCaps: Transports the ReCap stacks in the module.

Figure 5: Lower interior view of the Recapper Module

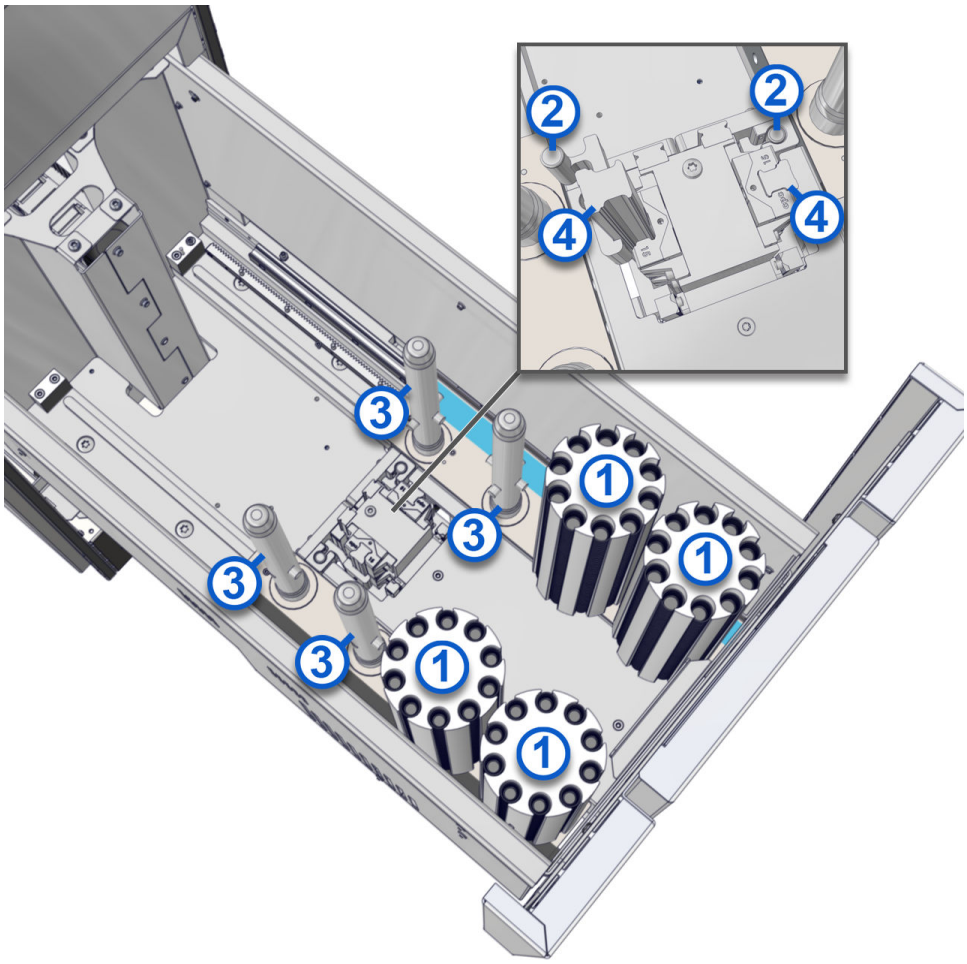

Legend:

1. ReCap revolvers: Holds ReCaps in stacks.
2. Conveying pusher: Raises the ReCap stack inside the revolver from the bottom to the top.
3. Revolver holder: Holds the revolvers in an upright position.
4. Guide rail: Guides the conveying pusher.

Related information...

Recapper Module overview, page 10
ReCaps, page 15

ReCaps

ReCaps are consumables of the Recapper Module of the GLP systems Track. They are disposable caps intended to recap sample tubes for storing after analysis in medical laboratories.

ReCaps are available in two sizes:

- ReCap S (small) is for tubes with a maximum diameter of 13 mm and an internal diameter ranging from 10.40 mm through 11.40 mm
- ReCap L (large) is for tubes with a maximum diameter of 16 mm and an internal diameter ranging from 13.00 mm through 13.75 mm

Figure 6: ReCaps

Legend:

1. Revolver stacked with small ReCaps (gray tape)
2. Revolver stacked with large ReCaps (blue tape)
3. Bottom view of revolver with small ReCaps
4. Bottom view of revolver with large ReCaps
5. ReCap S
6. ReCap L

Related information...

Design and function, page 10

Descriptions of module statuses

Module status refers to the operational modes of the module. The module has the following statuses:

On	The On/Off push button is illuminated steady green.
Off	The On/Off push button is illuminated blinking green.
Online	The module is in automatic mode. The Online/Offline push button is illuminated steady green and the arrow area of the **Online/Offline** button is green.
Offline	The module is in standby mode. The Online/Offline push button is illuminated steady yellow and the arrow area of the **Online/Offline** button is gray.
Pause	The module is briefly inactive. The Online/Offline push button is illuminated blinking green and the arrow area of the **Online/Offline** button is blinking green.
Error	An error has occurred on the module. The Online/Offline push button is illuminated steady red.

Related information...

Recapper Module overview, page 10

NOTES

Introduction

For optimal system performance, the Recapper Module must be correctly installed. After the system has been installed, it must be configured to meet individual laboratory requirements.

Related information...

Recapper Module installation requirements, page 20

Main menu screen, page 22

Recapper Module installation requirements

The Recapper Module may only be installed indoors. Water connections are not required. Contact an Abbott Laboratories representative or an authorized service representative for more information about service requirements. Facilities must fulfill the floor area and height requirements.

NOTE: The specified floor area measurements are recommendations only. Contact an Abbott Laboratories representative or an authorized service representative for more information.

Table 1: Floor area specifications

Evenness tolerance requirement	Permissible deviation: ± 5 mm over 15 mm
Compensation with adjustable feet	Maximum of 10 mm
Material requirement	Incompressible material such as concrete

Figure 7: Floor area measurements in meters

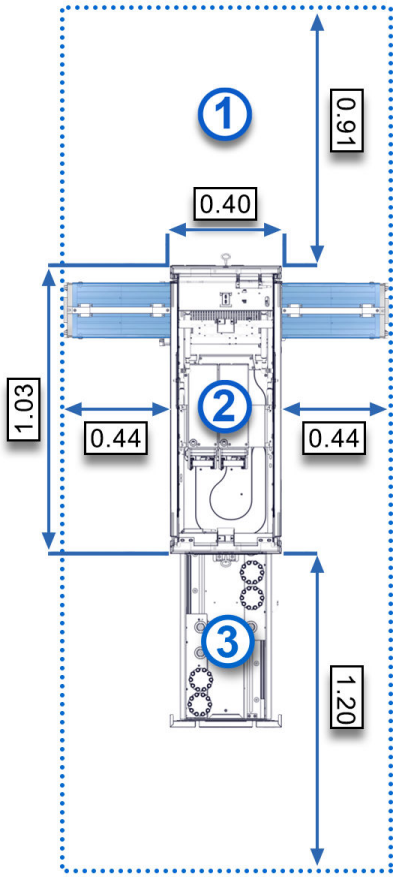

Legend:

1. Work and service area
2. Recapper Module
3. Pullout compartment loading area

Figure 8: Height measurements in meters

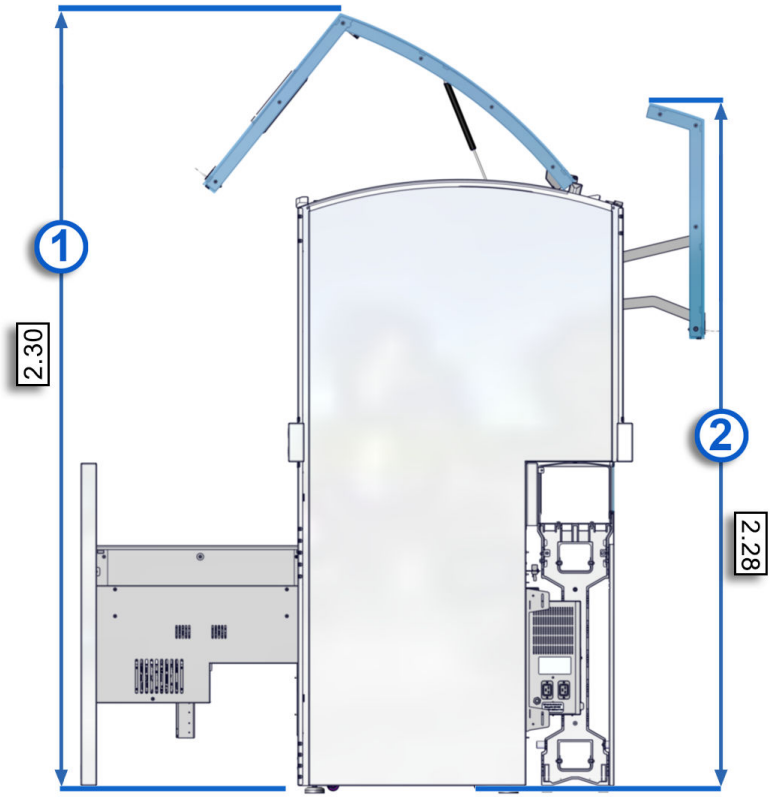

Legend:

1. Front module cover opened
2. Rear module cover opened

Related information...

Installation procedures and special requirements, page 19
Technical data, page 30

Main menu screen

After successful initialization of the Recapper Module, the Main menu screen is displayed.

Figure 9: Main menu screen

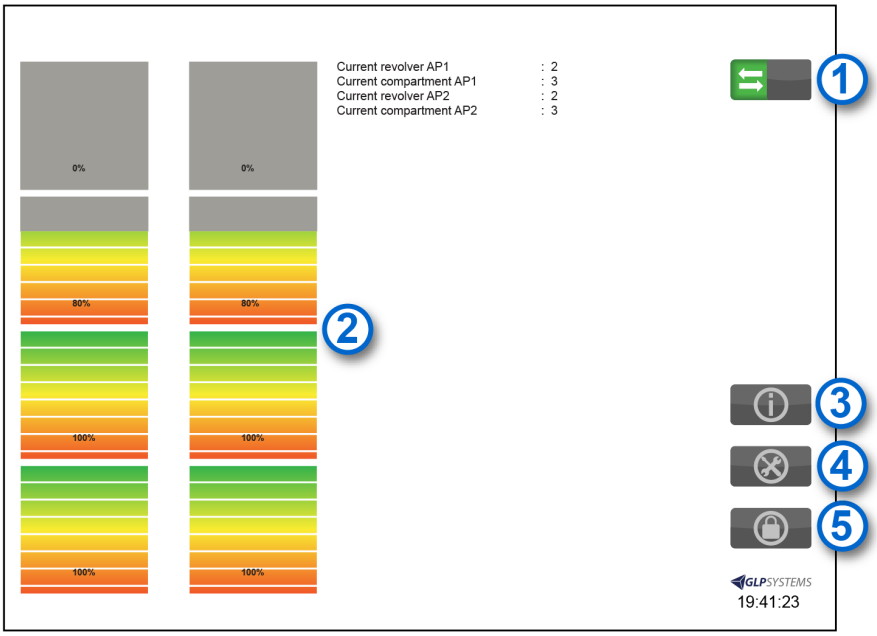

Legend:

1. **Online/Offline** button with pause function: Places the module online and offline and pauses the module.
2. ReCap revolver supply indicator: Indicates the percentage of ReCaps remaining in each revolver.
3. **Information** button: Navigates to the Information screen.
4. **Configuration** button: Navigates to the Configuration screen.
5. **Login** button: Navigates to the Login screen.

Related information...

Installation procedures and special requirements, page 19
Login screen, page 22
Information screen, page 24
Configuration screen, page 24
Design and function, page 10

Login screen

The Login screen for the configuration manager is displayed if a login and password have been defined during installation.

NOTE: Configuration of the operator login is performed by an Abbott Laboratories representative or an authorized service representative.

Figure 10: Login screen

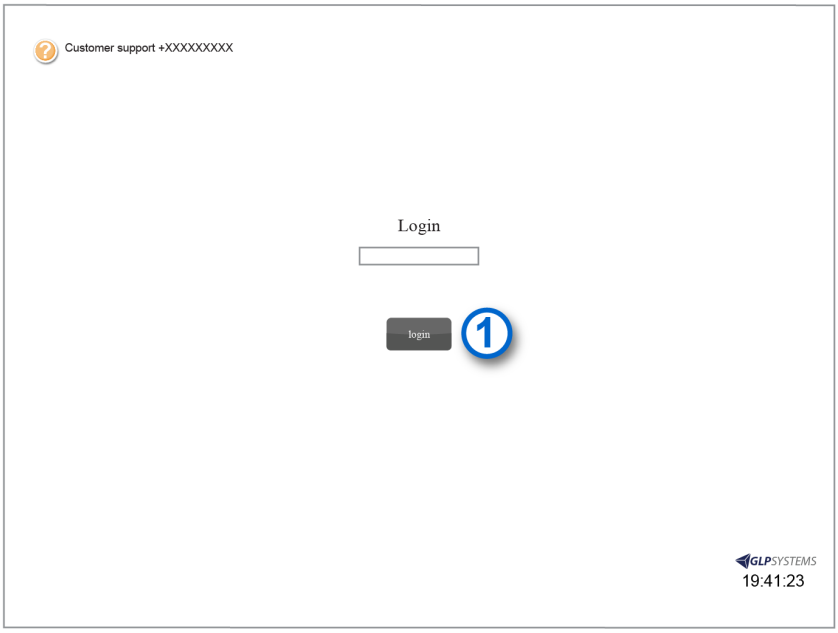

Legend:

1. **Login** button

Related information...

Main menu screen, page 22
Access the Login screen, page 23

Access the Login screen

Prerequisite	A password was defined during installation. **NOTE:** The **Login** button is available only to an Abbott Laboratories representative or an authorized service representative.
Required module status	Online or Offline

Perform this procedure to access the Login screen on the module.

NOTE: Configuration of the operator login is performed by an Abbott Laboratories representative or an authorized service representative.

1. On the Main menu screen, tap the **Login** button .
2. On the Login screen, enter a user name and password.

3. To return to the Main menu screen, tap **Login**.

Related information...

Login screen, page 22

Information screen

The Information screen on the module displays module status information.

Related information...

Main menu screen, page 22
Access the Information screen, page 24

Access the Information screen

Required module status	Online or Offline

Perform this procedure to access the Information screen on the module.

1. On the Main menu screen, tap the **Information** button .
2. On the Information screen, tap the **Exit** button to return to the Main menu screen.

Related information...

Information screen, page 24

Configuration screen

The Configuration screen on the module displays the following screen elements.

Related information...

Main menu screen, page 22
Access the Configuration screen, page 24

Access the Configuration screen

Required module status	Online or Offline

Perform this procedure to access the Configuration screen on the module.

1. On the Main menu screen, tap the **Configuration** button .
2. On the Configuration screen, tap the **Exit** button to return to the Main menu screen.

Related information...

Configuration screen, page 24

NOTES

Introduction

The Recapper Module seals open tubes from the distribution system with caps called ReCaps.

The ReCaps are kept ready for use in revolvers. These revolvers are held upright by revolver holders. Holders move linearly on the longitudinal axis and rotate for the removal of ReCaps.

The revolvers with ReCap stacks are loaded in the pullout compartment. The conveying tube transports the ReCap stacks from the pullout compartment up to the housing. The conveying pusher raises the ReCap stack from the bottom of the revolver to the top. Then the sensor on the conveying tube registers that a ReCap has reached the removal position and forwards this information to the control system. Then the robot gripper takes out the uppermost ReCap from the stack. If the height falls below its minimum requirement, ReCaps are automatically added from below.

The sample tubes are sealed while the clamping jaws at the AccessPoint holds them in the CARs.

NOTES

Introduction

Before operating the Recapper Module, become familiar with system performance characteristics.

Related information...

Technical data, page 30

Technical data

Table 2: Technical data

Throughput	Maximum of 1200 ReCaps per hour **NOTE:** The specified performance of the module is based on measurements taken in a given test environment. The actual performance may vary significantly depending on the use scenario of the laboratory automation system.
Capacity	750 large ReCaps per revolver 730 small ReCaps per revolver (Up to 8 revolvers maximum)
Dimensions	40 cm (width) x 103 cm (depth) x 188 cm (height)
Weight	Recapper Module Double: 266 kg
Altitude	30.8 m (100 ft) below sea level to 2000 m (6561 ft) above sea level
Ambient temperature	During operation: +15°C to +30°C
Relative humidity	During operation: 30% to 80% (noncondensing)
Waste heat	Recapper Module Double: 306 kJ/h at full capacity
Sound pressure level	Maximum of 65 dBA
Supply voltage	230 VAC to 240 VAC
Supply frequency	50 Hz/60 Hz
Power requirement	Recapper Module Double: 1.22 kW
System current	Recapper Module Double: Maximum 1.76 A
Energy consumption	Recapper Module Double: 0.100 kWh at full capacity
Power	Recapper Module Double: • Nominal: 62 W • Peak: 85 W • 212 VA Max
Electrical safety parameters **NOTE:** Electrical safety parameters have no bearing on performance.	• Installation category: II (overvoltage category) • Pollution degree: 2

NOTE: Laboratory personnel have the responsibility to maintain ambient temperature in the specified range to prevent overheating and excessive evaporation of samples, primarily for uncapped sample tubes. Follow the tube, analyzer, and reagent manufacturer assay-specific documentation for detailed information about proper sample preparation, processing, and storage. Failure to comply with manufacturer recommendations for sample handling could result in delayed or incorrect results.

Related information...

Performance characteristics and specifications, page 29
Sample processing specifications, page 31
Recapper Module installation requirements, page 20

Sample processing specifications

Due to specific sample processing possibilities on the modules of the GLP systems Track and due to manufacturer specifications of the connected analyzers, there are deviations and restrictions for sample processing.

Table 3: Sample tube technical data

Tube type	Uncapped sample tubes only
Cap types	• Small ReCaps: Suitable for tubes with a maximum diameter of 13 mm and an internal diameter ranging from 10.40 mm through 11.40 mm • Large ReCaps: Suitable for tubes with a maximum diameter of 16 mm and an internal diameter ranging from 13.00 mm through 13.75 mm

For more information, refer to the GLP systems Track Operations Manual.

Related information...

Technical data, page 30

NOTES

Introduction

This section provides instructions on how to perform normal operating procedures on the Recapper Module. Before operating the system, become familiar with hardware components of the system.

Related information...

Recapper Module operation, page 34

Recapper Module operation

The module-specific function selection for the Recapper Module is displayed on the Main menu screen. The operator selects the corresponding function and follows the instructions. Ensure that the module covers are closed and locked before operating the module.

Related information...

Operating instructions, page 33
Open and close the front and rear module covers, page 34
Cycle power to the module, page 36
Power on the module, page 38
Power off the module, page 39
Place the module online, page 39
Place the module offline, page 40
Pause the module, page 40
Deactivate pause mode, page 41
Replace revolvers, page 41
Disable the supply of small tube or large tube ReCaps, page 44
Enable the supply of small tube or large tube ReCaps, page 44

Open and close the front and rear module covers

Required materials	Key
Required module status	Offline

Perform this procedure to open and close the front and rear module covers.

CAUTION: Overhead obstruction. Operators may hit their heads on open module covers.

- Be aware that injury can occur when module covers are opened and closed.
- Protect the head when working on modules with open module covers.
- Frequently observe the functionality of the opening mechanism. Regular inspection of the covers is necessary during maintenance to ensure proper operation.

CAUTION: Mind or watch your hands. The front and rear module covers can be opened and closed **only** by a trained operator. Finger pinches can occur between two adjacent modules if module covers are closed by holding their sides. Use caution when opening and closing the front and rear module covers.

1. At the lower end of the front or rear module cover, insert the key [1] into the lock [2].

   NOTE: Images of the rear module cover and the module flap cover are not shown.

Figure 11: Front module cover lock

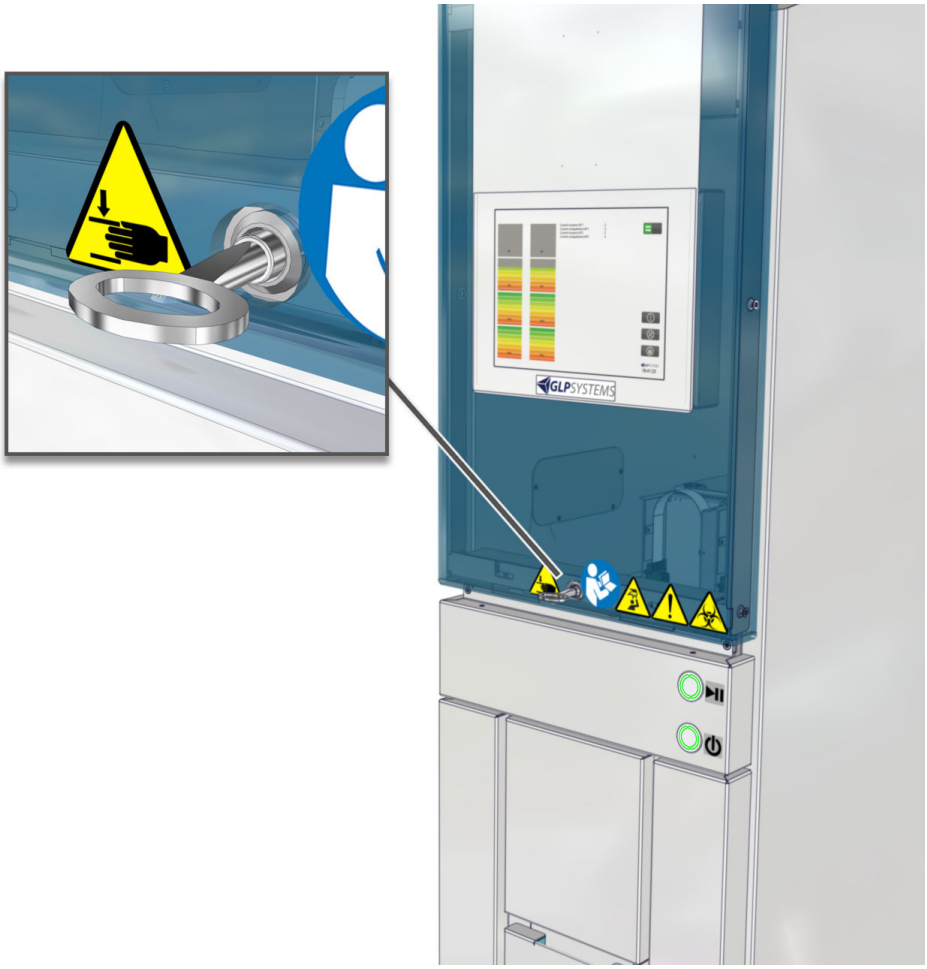

2. While turning the key [1] counterclockwise a quarter turn, begin lifting the front module cover [3] or rear module cover.

Figure 12: Key

3. Remove the key [1] from the lock [2].
4. Fully lift open the front module cover [3] or rear module cover.

Figure 13: Front module cover opened

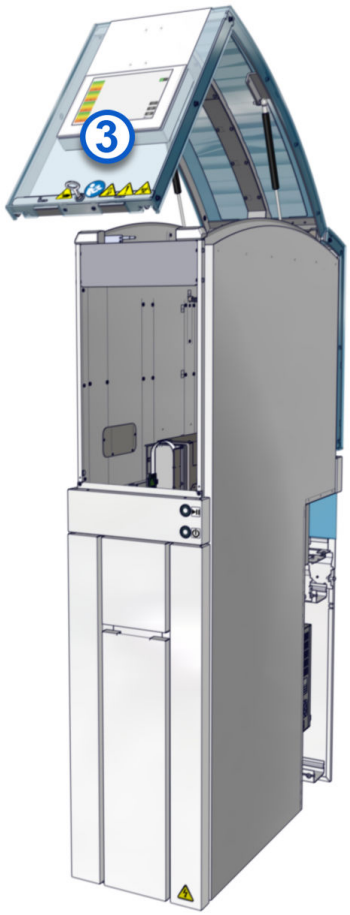

5. To close the front module cover [3] or rear module cover, carefully pull down the cover.
6. Press lightly on the cover until it is secured.
7. Place the module online.

Related information...

Recapper Module operation, page 34
Place the module online, page 39
Place the module offline, page 40
Design and function, page 10

Cycle power to the module

Prerequisite The module has completed all processing and no samples are present on the module.

Perform this procedure to cycle power to the module to reestablish communication among the system components or to troubleshoot the module.

1. To power off the module, press the On/Off push button for a minimum of 3 seconds.
2. Wait for the module to power off.
3. After the module is powered off, wait for a minimum of 1 minute.
4. To power on the module, press the On/Off push button for a minimum of 3 seconds.

   The On/Off push button blinks green at a higher rate and the module starts.

   The Start screen is displayed. The **Start** button [1] turns from gray to green when the module is ready for initialization.

   Figure 14: Start screen

5. Tap the **Start** button [1] to initialize the module.

   A screen with a rotating animation is displayed. After the module is initialized, the Main menu screen is displayed.

Related information...

Recapper Module operation, page 34
Power on the module, page 38
Power off the module, page 39
Open and close the front and rear module covers, page 34
Design and function, page 10

Power on the module

Prerequisite

- The module is connected to the power supply.
- The On/Off push button is illuminated blinking green.
- Front and rear module covers must be closed and locked.

Required module status Off for more than 1 minute

Perform this procedure to power on the module.

1. Press the On/Off push button for a minimum of 3 seconds.

   The On/Off push button blinks green at a higher rate and the module starts.

   The Start screen is displayed. The **Start** button [1] turns from gray to green when the module is ready for initialization.

   Figure 15: Start screen

2. Tap the **Start** button [1] to initialize the module.

   A screen with a rotating animation is displayed. After the module is initialized, the Main menu screen is displayed.

The On/Off push button is illuminated steady green.

Related information...

Recapper Module operation, page 34

Power off the module, page 39
Open and close the front and rear module covers, page 34
Design and function, page 10

Power off the module

Prerequisite	• The On/Off push button is illuminated steady green. • The module has completed all processing and no samples are present on the module.
Required module status	On

Perform this procedure to power off the module.

1. Press the On/Off push button for a minimum of 3 seconds.
2. Wait for the module to power off.

The On/Off push button is illuminated blinking green.

Related information...

Recapper Module operation, page 34
Power on the module, page 38
Design and function, page 10

Place the module online

Prerequisite	The Online/Offline push button is illuminated steady yellow and the arrow area of the **Online/Offline** button is gray.
Required module status	Offline

Perform this procedure to place the module online.

NOTE: Samples may be present in the module if the module was placed offline during processing.

1. Briefly press the Online/Offline push button or tap the gray arrow area of the **Online/Offline** button on the touchscreen user interface.
2. Wait for the module to transition to a status of Online.

The Online/Offline push button is illuminated steady green and the arrow area of the **Online/Offline** button is green.

Related information...

Recapper Module operation, page 34
Place the module offline, page 40
Design and function, page 10
Enable the supply of small tube or large tube ReCaps, page 44

Place the module offline

Prerequisite	The Online/Offline push button is illuminated steady green and the arrow area of the **Online/Offline** button is green.
Required module status	Online

Perform this procedure to place the module offline. All processes running in the module stop. CARs are no longer routed to the module.

NOTE: Samples in the module are not processed until the module is transitioned back to a status of Online.

1. Press the Online/Offline push button for a minimum of 3 seconds or tap the green arrow area of the **Online/Offline** button on the touchscreen user interface.
2. Wait for the module to transition to a status of Offline.

The Online/Offline push button is illuminated steady yellow and the arrow area of the **Online/Offline** button is gray.

Related information...

Recapper Module operation, page 34
Place the module online, page 39
Design and function, page 10

Pause the module

Prerequisite	The Online/Offline push button is illuminated steady green and the arrow area of the **Online/Offline** button is green.
Required module status	Online

Perform this procedure to pause the module. When the module is paused, all processing of new samples stop. No new samples in CARs route to the module. The Track Sample Manager indicates that the module status is Online.

1. Briefly press the Online/Offline push button or tap the gray area of the **Online/Offline** button on the touchscreen user interface.

2. Wait for the module to transition to a status of Pause.

The Online/Offline push button is illuminated blinking green and the arrow area of the **Online/Offline** button is blinking green.

NOTE: If the module is paused for longer than 5 minutes, the module automatically transitions to a status of Offline.

Related information...

Recapper Module operation, page 34
Place the module online, page 39
Deactivate pause mode, page 41
Replace the clamping jaws on the AccessPoint, page 60
Deactivate pause mode, page 41
Design and function, page 10

Deactivate pause mode

Prerequisite	The Online/Offline push button is illuminated blinking green and the arrow area of the **Online/Offline** button is blinking green.
Required module status	Pause

Perform this procedure to deactivate pause mode on the module.

1. Briefly press the Online/Offline push button or tap the gray area of the **Online/Offline** button on the touchscreen user interface.
2. Wait for the module to transition to a status of Online.

The Online/Offline push button is illuminated steady green and the arrow area of the **Online/Offline** button is green.

Related information...

Recapper Module operation, page 34
Pause the module, page 40
Design and function, page 10

Replace revolvers

Required module status	Online

CAUTION: Contamination hazard. Incorrect analysis results due to cross-contamination of the sample matter.

- Caps may not be reused.
- Always wear personal protective equipment during operation.

Perform this procedure to replace the revolvers.

1. Place the module offline.

   A status message on the touchscreen user interface indicates the revolvers are moving to a safe position. As soon as the revolvers are in safe position, the status message indicates it is safe to open the pullout compartment.

2. Open the pullout compartment.
3. Remove empty revolvers [1] by lifting the revolvers up from the revolver holders [2].

   Figure 16: Revolver removal

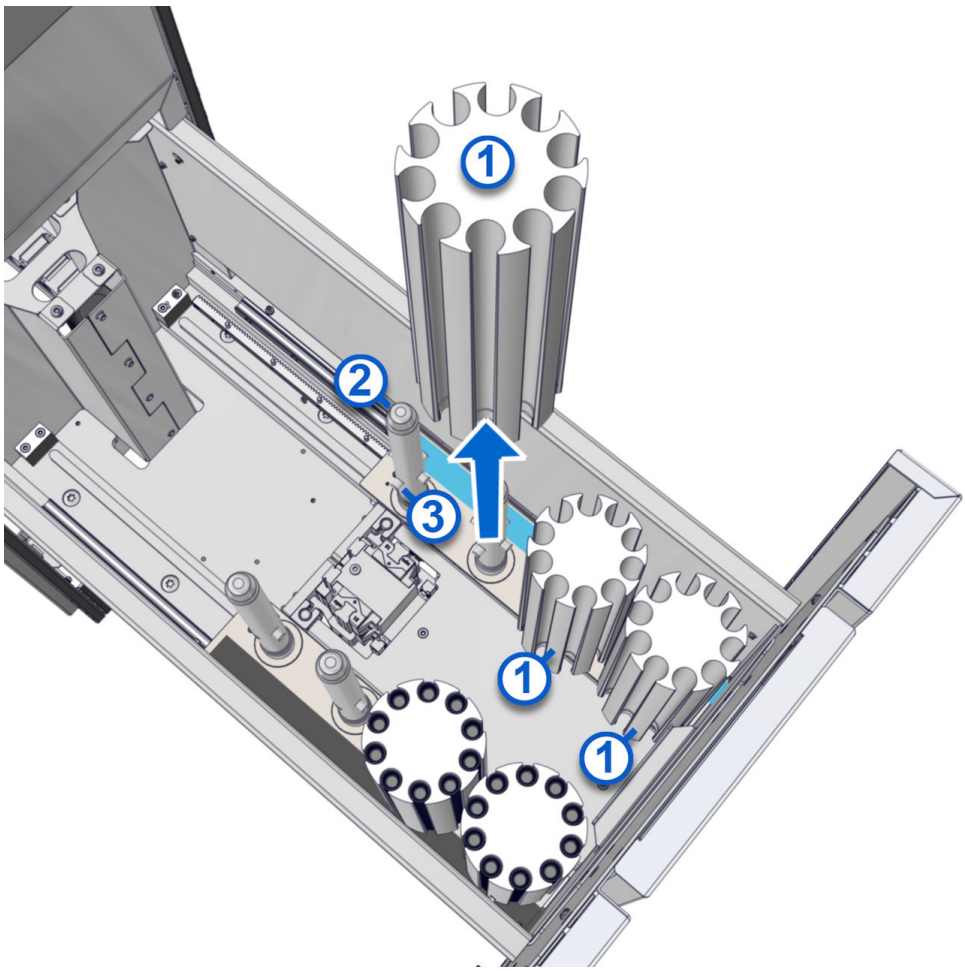

4. Install new revolvers.

Align each new revolver [5] with the revolver key [3] on the appropriate revolver holder [2] using the color coded tape. Then, remove the cover [4] from the new revolver and slide the revolver onto the revolver holder.

NOTE: The large ReCaps revolver can be distinguished from the small with the blue tape on the cover.

Figure 17: Revolver installation

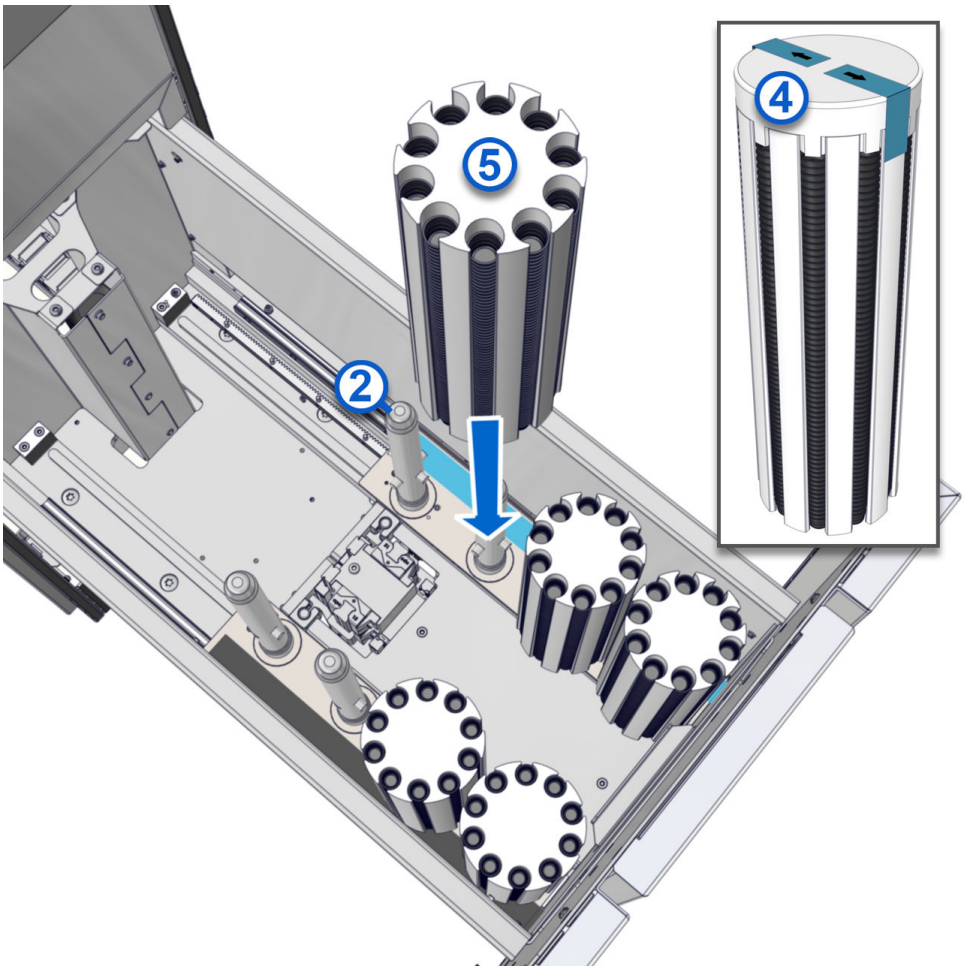

5. Close the pullout compartment.

   When the pullout compartment is closed, a prompt is displayed on the touchscreen user interface.

6. Tap an appropriate option, and then tap the **Next** button to confirm the selection.
7. Place the module online.

The pullout compartment is locked, and the module is online and ready for operation.

Related information...

Recapper Module operation, page 34
Place the module online, page 39

Place the module offline, page 40
Design and function, page 10

Disable the supply of small tube or large tube ReCaps

Required module status	Offline

Perform this procedure to disable the supply of small tube (S) ReCaps or large tube (L) ReCaps in the pullout compartment to use only one size of ReCaps.

1. Open the pullout compartment.
2. Close the pullout compartment.

   When the pullout compartment is closed a prompt is displayed on the touchscreen user interface.
3. Select **Disable left cap supply** to disable S ReCaps or **Disable right cap supply** to disable L ReCaps.
4. Tap the **Next** button to confirm.
5. Place the module online.

The selected ReCap size is disabled.

NOTE: To enable the disabled ReCaps supply, select the **Left** or **Right cap supply refilled** option.

Related information...

Recapper Module operation, page 34
Place the module online, page 39
Enable the supply of small tube or large tube ReCaps, page 44

Enable the supply of small tube or large tube ReCaps

Required module status	Offline

Perform this procedure to enable the supply of disabled small tube (S) ReCaps or large tube (L) ReCaps in the pullout compartment when one size of ReCaps is disabled.

1. Open the pullout compartment.
2. Close the pullout compartment.

   When the pullout compartment is closed a prompt is displayed on the touchscreen user interface.
3. Select **Left cap supply refilled** to enable S ReCaps or **Right cap supply refilled** to re-enable L ReCaps.

4. Tap the **Next** button to confirm.
5. Place the module online.

The selected ReCap size is enabled.

Related information...

Recapper Module operation, page 34
Disable the supply of small tube or large tube ReCaps, page 44
Place the module online, page 39

NOTES

Introduction

For optimal operator safety and accurate test results, comply with operational requirements, precautions, and limitations. Operators must be trained before they are allowed to operate the system. Failure to comply can affect system performance, and may cause damage to the system or may adversely affect test results.

For more information regarding operational precautions and limitations, refer to the GLP systems Track Operations Manual.

NOTES

Introduction

To minimize the potential for harm to personnel and damage to the laboratory environment, comply with the hazard and safety information.

This section contains supplemental information. Do not use the supplemental information to supersede workplace safety requirements. Review any significant differences between the supplemental information and the workplace safety requirements with management or a workplace safety representative.

For more information regarding hazards, refer to the GLP systems Track Operations Manual.

Related information...

Safety icons, page 50

Safety icons

Safety icons are used on the system and in the system documentation to identify potentially dangerous conditions. Become familiar with these icons to know the type of potential hazard.

CAUTION: Radio-frequency identification (RFID) devices. The operator should not change or modify RFID devices without approval by the party responsible for compliance. This action could void the operator's authority to operate the equipment.

CAUTION: Radio frequency exposure. The operator should be at least 20 cm from all RFID devices.

CAUTION: Delayed analysis due to power failure. In the case of a power failure, the samples (including emergency samples) remain inside the LAS and must be removed manually as required.

- Only allow trained personnel to remove the samples manually.
- If a sample is held by a robot gripper, manually remove the sample.
- Observe the LAS for any remaining emergency samples and remove them manually.
- Follow the information in the operations manuals for the modules.

Table 4: Safety icons and descriptions

Icon	Description
	CAUTION: Biological RISKS Identifies an activity or an area where the operator may be exposed to potentially infectious material.
	CAUTION: Mind or watch your hands Identifies an activity or an area where the operator may be exposed to hand injuries.
	CAUTION: Overhead obstruction Identifies an activity or an area where the operator may be exposed to overhead obstructions.
	CAUTION When used in this manual, this icon is accompanied by a description of the hazard and a related-information reference to safety content in this section. Examples include the following condition: **CAUTION: Moving Parts** Identifies an activity or an area where the operator may be exposed to moving parts.
	Observe operations manual Indicates that the operations manual must be read.

Icon	Description
	WEEE: Waste Electrical and Electronic Equipment Indicates that the item needs to be disposed of in a separate waste collection for electrical and electronic equipment and must not be disposed of in the general waste or trash.

Related information...

Hazards, page 49

NOTES

Introduction

The appropriate service, maintenance, and diagnostics of the system are some of the most important aspects of a complete quality assurance program. A thorough service, maintenance, and diagnostic program:

- Minimizes downtime.
- Maintains records for inspection and accreditation.
- Maintains system performance to provide optimal test results.

NOTE: Only approved customer-replaceable components are permitted to be used.

Related information...

Cleaning and maintenance checks, page 54

Cleaning, page 55

Maintenance, page 60

Cleaning and maintenance checks

Dust can cause system errors. The following maintenance checks are required daily on the Recapper Module to maintain optimal system performance:

Table 5: Cleaning and maintenance checks

Check	Activity	Interval
Inspect the module for dust.	Carefully remove any dust. See the cleaning procedures in this manual.	Daily
Verify that there are no observed problems.	Resolve any observed problems as needed. See *Recapper Module observed problems*, page 86.	Daily
Inspect the AccessPoint for contamination.	Perform *Clean the AccessPoint*, page 58 if necessary.	Daily
Verify that the robot gripper fingers are not worn, damaged or dirty.	Perform *Clean the robot gripper*, page 58 if necessary.	Daily
Verify that no foreign objects are present on the module.	Remove any foreign objects.	Daily
Verify that the module covers are closed and locked.	Perform *Open and close the front and rear module covers*, page 34 to close the module covers if applicable.	Daily
Verify that the module covers remain in position when opened.	Contact an Abbott Laboratories representative or an authorized service representative if necessary.	Daily

Related information...

Service, maintenance, and diagnostics, page 53

Cleaning

Some system components may need to be cleaned because of normal use from daily system operations or because of spills.

IMPORTANT: Incorrect cleaning procedures may cause sample contamination. Inappropriate cleaning agents may cause damage to the Recapper Module. Only allow trained personnel to clean the Recapper Module. Only use the recommended cleaning agents.

CAUTION: Wear personal protective equipment while operating the laboratory automation system.

CAUTION: Biological RISKS. This activity or area may expose the operator to potentially infectious material.

CAUTION: Overhead obstruction. Operators may hit their heads on open module covers.

- Be aware that injury can occur when module covers are opened and closed.
- Protect the head when working on modules with open module covers.
- Frequently observe the functionality of the opening mechanism. Regular inspection of the covers is necessary during maintenance to ensure proper operation.

NOTE: Ensure that all samples have completed processing on the module to prevent contamination of samples.

Related information...

Service, maintenance, and diagnostics, page 53
Weekly cleaning procedures, page 55
As-needed cleaning procedures, page 56

Weekly cleaning procedures

Weekly cleaning procedures are required on the Recapper Module.

Related information...

Cleaning, page 55
Clean the monitor, page 55
Clean the module covers, page 56

Clean the monitor

Required materials

- Laboratory-grade surface disinfectant
- Lint-free cloth

Required module status Off

Perform this weekly procedure to clean the monitor.

1. Ensure that the module covers are closed and locked before the monitor is cleaned.
2. Dampen a lint-free cloth with a surface disinfectant.
3. Carefully wipe the entire surface area of the monitor to remove any dust.
4. Wait until the monitor is dry to power on the module.

Related information...

Weekly cleaning procedures, page 55
Power off the module, page 39
Open and close the front and rear module covers, page 34

Clean the module covers

Required materials

- Antistatic plastic cleaner
- Lint-free cloth

Required module status Offline

Perform this weekly procedure to clean the module covers.

1. Ensure that the module covers are closed and locked before the module covers are cleaned.
2. Dampen a lint-free cloth with an antistatic plastic cleaner.
3. Wipe the entire surface area of the module cover.
4. Let the module cover air-dry to allow an antistatic film to form.

Related information...

Weekly cleaning procedures, page 55
Open and close the front and rear module covers, page 34
Place the module offline, page 40

As-needed cleaning procedures

As-needed cleaning procedures are required on the Recapper Module.

CAUTION: Risk of contamination and injury. During operation of the laboratory automation system (LAS), sample tubes and components may be damaged due to failure to comply with safe-use instructions. Spilled sample matter may cause infections due to contact with non-intact skin or mucous membranes.

- Wear personal protective equipment while operating the LAS. Avoid direct contact with the sample matter.
- Follow all hygiene regulations applicable to laboratory work.
- Only allow trained personnel to operate the LAS.

Related information...

Cleaning, page 55
Clean the interior, page 57
Clean the pullout compartment, page 57
Clean the robot gripper, page 58
Clean the AccessPoint, page 58

Clean the interior

Required materials

- Handheld vacuum cleaner (recommended)
- Laboratory-grade surface disinfectant
- Lint-free cloth

Required module status Offline

Perform this as-needed procedure to clean the interior.

1. Open the module cover.
2. Vacuum the surface of the lane elements.
3. Vacuum the guiding slot.
4. Dampen a lint-free cloth with a surface disinfectant.
5. Carefully wipe the surfaces of the interior to remove any dust.
6. Close the module cover.

Related information...

As-needed cleaning procedures, page 56
Open and close the front and rear module covers, page 34
Place the module offline, page 40

Clean the pullout compartment

Required materials

- Handheld vacuum (recommended)
- Laboratory-grade surface disinfectant
- Lint-free cloth

Required module status Offline

Perform this as-needed procedure to clean the pullout compartment.

1. Open the pullout compartment.
2. Remove any spilled ReCaps from the pullout compartment.
3. Vacuum the pullout compartment.
4. Dampen a lint-free cloth with a surface disinfectant.
5. Carefully wipe the pullout compartment to remove any dust.
6. Close the pullout compartment.

Related information...

As-needed cleaning procedures, page 56
Place the module offline, page 40

Clean the robot gripper

Required materials

- Laboratory-grade surface disinfectant
- Lint-free cloth

Required module status Offline

Perform this as-needed procedure to clean the robot gripper.

1. Open the module cover.
2. Dampen a lint-free cloth with a surface disinfectant.
3. Carefully wipe the robot gripper to remove any dust.
4. Close the module cover.

Related information...

As-needed cleaning procedures, page 56
Open and close the front and rear module covers, page 34
Place the module offline, page 40

Clean the AccessPoint

Required materials

- Laboratory-grade surface disinfectant
- Lint-free cloth

Required module status	Offline

Perform this as-needed procedure to clean each AccessPoint on the module.

1. Open the module cover.
2. Dampen a lint-free cloth with a surface disinfectant.
3. Carefully wipe each AccessPoint to remove any dust.
4. Close the module cover.

Related information...

As-needed cleaning procedures, page 56
Open and close the front and rear module covers, page 34
Place the module offline, page 40

Maintenance

The laboratory staff may perform procedures that are included in this manual. Procedures not included in this manual may only be performed by an Abbott Laboratories representative or an authorized service representative.

CAUTION: Risk of infection. The operator may be exposed to potentially infectious materials, such as patient samples, through contact with non-intact skin or mucous membranes. Wear personal protective equipment while operating the laboratory automation system.

CAUTION: Overhead obstruction. Operators may hit their heads on open module covers.

- Be aware that injury can occur when module covers are opened and closed.
- Protect the head when working on modules with open module covers.
- Frequently observe the functionality of the opening mechanism. Regular inspection of the covers is necessary during maintenance to ensure proper operation.

NOTE: Ensure that all samples have completed processing on the module to prevent contamination of samples.

Related information...

Service, maintenance, and diagnostics, page 53
As-needed maintenance procedures, page 60

As-needed maintenance procedures

As-needed maintenance procedures are required on the Recapper Module.

Related information...

Maintenance, page 60
Replace the clamping jaws on the AccessPoint, page 60

Replace the clamping jaws on the AccessPoint

Required materials	Tx10 Torx screwdriver
Required module status	Off

Perform this as-needed procedure to replace the clamping jaws on either of the AccessPoints.

NOTE: Both clamping jaws and screws must always be replaced at the same time.

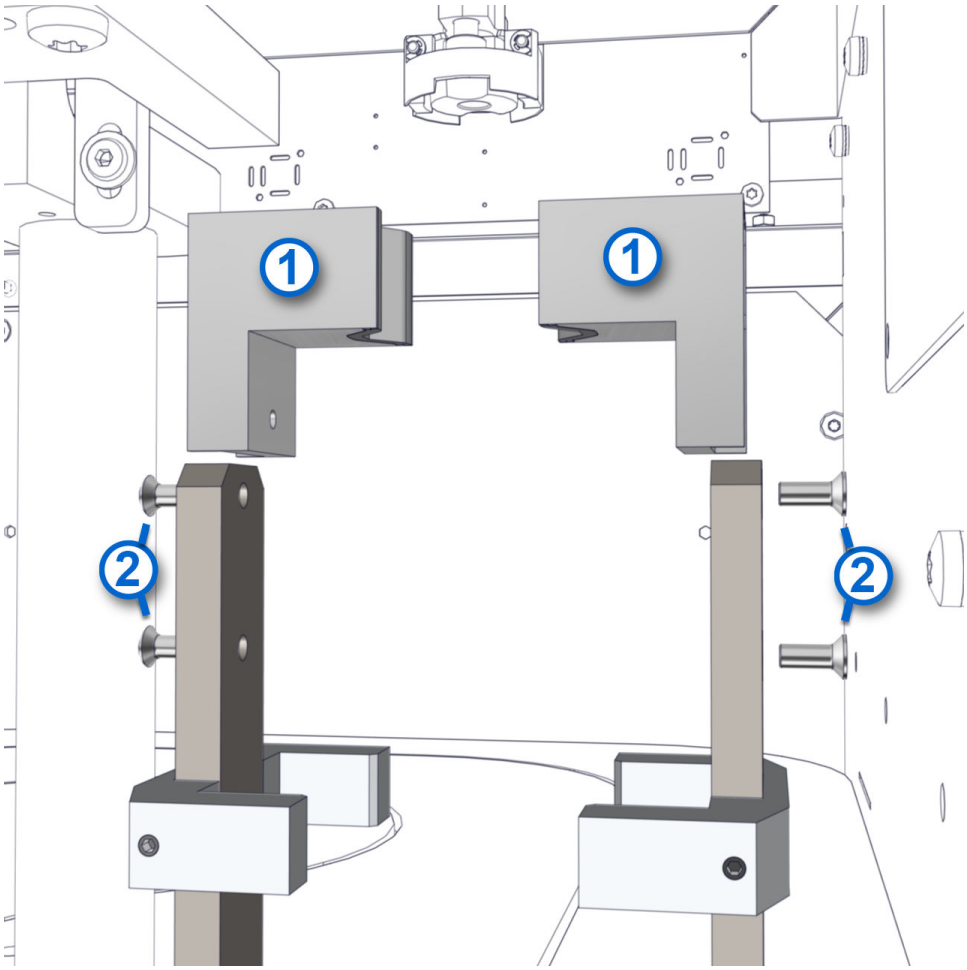

1. Open the module cover.
2. Loosen both screws [2] on the clamping jaws [1] with the Torx screwdriver and remove the screws.
3. Remove the clamping jaws [1] from the mounts.
4. Insert a new clamping jaw [1] onto each mount.
5. Insert new screws [2] into each mount and clamping jaw [1] and tighten the screws with the Torx screwdriver.
6. Close the module cover.
7. Power on the module.

Related information...

As-needed maintenance procedures, page 60
Power on the module, page 38
Power off the module, page 39
Open and close the front and rear module covers, page 34

Place the module online, page 39
Place the module offline, page 40
Pause the module, page 40
Deactivate pause mode, page 41

Introduction

Problems with the Recapper Module are characterized by symptoms. Troubleshooting tools, references, and suggested techniques help to trace the symptom to one or more root causes.

After determining the root cause, perform the corrective actions to resolve the problem.

Before troubleshooting is performed for system errors, the module status must be Offline.

The laboratory staff may perform procedures that are included in this manual. Procedures not included in this manual may be performed only by an Abbott Laboratories representative or an authorized service representative.

NOTE: Corrective actions may involve hazardous activity. Use caution to minimize operator exposure and to prevent personal injury or system damage.

CAUTION: Do not remove samples from a CAR or the track. If samples are removed from the track, they must be deleted from the Track Sample Manager before they are placed back in the Input/Output Module for appropriate routing.

CAUTION: Risk of infection. The operator may be exposed to potentially infectious materials, such as patient samples, through contact with non-intact skin or mucous membranes. Wear personal protective equipment while operating the laboratory automation system.

Related information...

Message codes, page 64

Recapper Module observed problems, page 86

Message codes

Message codes are displayed on the touchscreen user interface when errors occur. Message codes provide information about conditions or errors of system operation.

If a message code cannot be resolved, contact an Abbott Laboratories representative or an authorized service representative.

Related information...

Troubleshooting, page 63
Message code screen, page 65
100, page 66
101, page 67
105, page 67
106, page 67
107, page 68
108, page 68
109, page 68
15004, page 69
15010, page 69
15015, page 69
20105, page 69
20150, page 70
20151, page 70
20200, page 70
20201, page 71
20202, page 71
20203, page 71
20204, page 72
20205, page 72
20206, page 72
20207, page 73
20210, page 73
20211, page 73
20300, page 74
20901, page 74
20902, page 74
20910, page 74
20911, page 75
20912, page 75

21000, page 75
21001, page 76
21002, page 76
21003, page 76
21004, page 76
21005, page 77
21006, page 77
21008, page 77
21009, page 77
21010, page 78
21013, page 78
21014, page 78
21015, page 79
21016, page 79
21017, page 79
21018, page 79
21019, page 80
21022, page 80
21023, page 80
21034, page 81
21036, page 81
21037, page 81
21050, page 81
22200, page 82
22201, page 82
22202, page 82
22400, page 83
22401, page 83
22402, page 83
23000, page 83
23001, page 84
23002, page 84
23003, page 84
23004, page 84
25150, page 85

Message code screen

The Message code screen on the module displays the following screen elements.

Figure 18: Message code screen

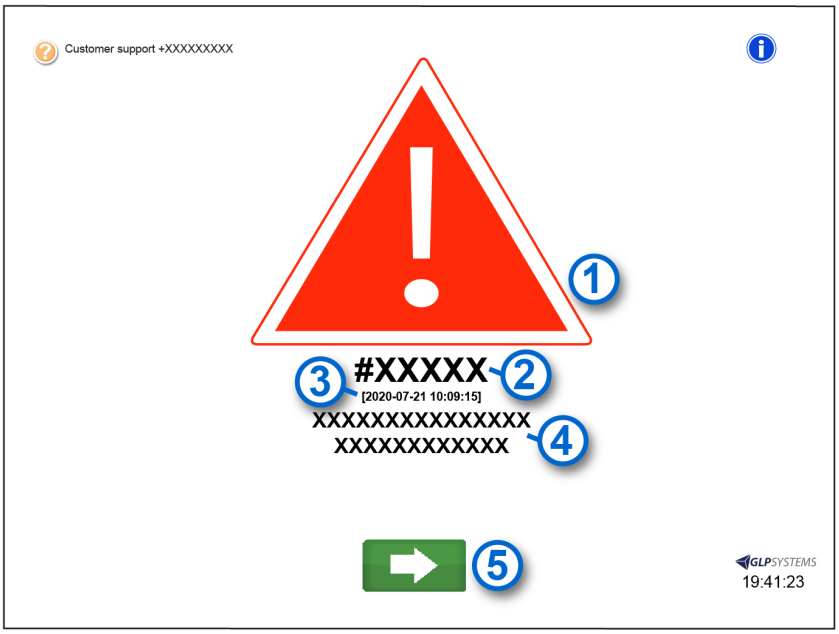

Legend:

1. Warning symbol: Indicates that an error has occurred.
2. Message code: Displays the message code number.
3. Date and time: Displays the date and time that the message code was generated.
4. Information text: Displays the message code description.
5. **Next** button: Navigates to the Solutions screen.

Related information...

Message codes, page 64
Acknowledge a message code, page 66

Acknowledge a message code

Perform this procedure to acknowledge an error message on the module.

1. On the Message code screen, tap the **Next** button .
2. On the Solutions screen, select the appropriate option by tapping it.
3. Tap the **Next** button to confirm the selection.

Related information...

Message code screen, page 65

Message code: 100

System error.

Details	Solutions
Not applicable.	Please select one of the offered solutions below. • Ignore error message.

Related information...

Message codes, page 64

Message code: 101

Invalid product code.
Product code invalid or not supported by display.

Probable cause	Corrective action
An error has occurred.	1. Correct the error by following the instructions on the touchscreen user interface. 2. If the error cannot be corrected, contact an Abbott Laboratories representative or an authorized service representative.

Related information...

Message codes, page 64

Message code: 105

Module Controller is out of memory.

Details	Solutions
Not applicable.	Please select one of the offered solutions below. • Error cannot be repaired. Stop module and call service.

Related information...

Message codes, page 64

Message code: 106

Invalid data structure.

Details	Solutions
Not applicable.	Please select one of the offered solutions below. • Ignore error message. • Error cannot be repaired. Stop module and call service. • Switch module to offline status.

Related information...

Message codes, page 64

Message code: 107

Unknown message type received.

Details	Solutions
Not applicable.	Please select one of the offered solutions below. • Ignore error message. • Switch module to offline status. • Error cannot be repaired. Stop module and call service.

Related information...

Message codes, page 64

Message code: 108

Data protocol version is not matching.

Details	Solutions
Not applicable.	Please select one of the offered solutions below. • Ignore error message. • Switch module to offline status. • Error cannot be repaired. Stop module and call service.

Related information...

Message codes, page 64

Message code: 109

Checksum error.

Details	Solutions
Not applicable.	Please select one of the offered solutions below. • Ignore error message. • Error cannot be repaired. Stop module and call service. • Switch module to offline status.

Related information...

Message codes, page 64

Message code: 15004

AccessPoint: number of clamp failures exceeds threshold.

Probable cause	Corrective action
An error has occurred.	Contact an Abbott Laboratories representative or an authorized service representative.

Related information...

Message codes, page 64

Message code: 15010

AccessPoint motor driver / hardware error.

Probable cause	Corrective action
An error has occurred.	1. Correct the error by following the instructions on the touchscreen user interface. 2. If the error cannot be corrected, contact an Abbott Laboratories representative or an authorized service representative.

Related information...

Message codes, page 64

Message code: 15015

AccessPoint might require reconfiguration.

Probable cause	Corrective action
An error has occurred.	1. Correct the error by following the instructions on the touchscreen user interface. 2. If the error cannot be corrected, contact an Abbott Laboratories representative or an authorized service representative.

Related information...

Message codes, page 64

Message code: 20105

No solution file found.

Probable cause	Corrective action
An error has occurred.	1. Correct the error by following the instructions on the touchscreen user interface. 2. If the error cannot be corrected, contact an Abbott Laboratories representative or an authorized service representative.

Related information...

Message codes, page 64

Message code: 20150

Invalid robot operation requested.

Probable cause	Corrective action
An error has occurred.	1. Correct the error by following the instructions on the touchscreen user interface. 2. If the error cannot be corrected, contact an Abbott Laboratories representative or an authorized service representative.

Related information...

Message codes, page 64

Message code: 20151

Invalid robot (0) target position.

0 = Robot type

Details	Solutions
Not applicable.	Please select one of the offered solutions below. • Reset and initialize the component again.

Related information...

Message codes, page 64

Message code: 20200

AccessPoint connection problem.

Details	Solutions
AccessPoint heartbeat lost.	Please select one of the offered solutions below. • Reset and initialize the component again.

Details	Solutions
	• Error cannot be repaired. Stop module and call service. • Disable component until next restart.

Related information...

Message codes, page 64

Message code: 20201

AccessPoint does not respond.

Details	Solutions
AccessPoint did not confirm release of CAR (0). 0 = CAR ID	Please select one of the offered solutions below. • The CAR (0) is gone or has been removed. • Reset and initialize the component again. • Error cannot be repaired. Stop module and call service. • Disable component until next restart.

Related information...

Message codes, page 64

Message code: 20202

AccessPoint fault.
The AccessPoint has reported a problem while handling CAR (0).
0 = CAR ID

Probable cause	Corrective action
An error has occurred.	1. Correct the error by following the instructions on the touchscreen user interface. 2. If the error cannot be corrected, contact an Abbott Laboratories representative or an authorized service representative.

Related information...

Message codes, page 64

Message code: 20203

AccessPoint hardware failure.

Details	Solutions
The AccessPoint has reported a hardware problem.	Please select one of the offered solutions below. • Reset and initialize the component again.

Details	Solutions
	• Error cannot be repaired. Stop module and call service. • Disable component until next restart.

Related information...

Message codes, page 64

Message code: 20204

The AccessPoint restarted unexpectedly.

Details	Solutions
Not applicable.	Please select one of the offered solutions below. • Please check if module operation is safe and confirm. • Reset and initialize the component again. • Error cannot be repaired. Stop module and call service. • Disable component until next restart.

Related information...

Message codes, page 64

Message code: 20205

AccessPoint initialization timeout.

Details	Solutions
The AccessPoint did not complete initialization in the expected time.	Please select one of the offered solutions below. • Reset and initialize the component again. • Error cannot be repaired. Stop module and call service. • Disable component until next restart.

Related information...

Message codes, page 64

Message code: 20206

RFID read problems.

Details	Solutions
The AccessPoint reported RFID read problems.	Please select one of the offered solutions below. • Reset and initialize the component again. • Error cannot be repaired. Stop module and call service.

Details	Solutions
	• Disable component until next restart.

Related information...

Message codes, page 64

Message code: 20207

CARs could not be caught.

Details	Solutions
The AccessPoint was not able to catch some CARs. Check the catch position.	Please select one of the offered solutions below. • Reset and initialize the component again. • Error cannot be repaired. Stop module and call service. • Disable component until next restart.

Related information...

Message codes, page 64

Message code: 20210

The AccessPoint lost too many CARs.

Details	Solutions
Check the AccessPoint settings or replace the AccessPoint.	Please select one of the offered solutions below. • Reset and initialize the component again. • Disable component until next restart. • Error cannot be repaired. Stop module and call service.

Related information...

Message codes, page 64

Message code: 20211

AccessPoint did not respond.

Details	Solutions
The AccessPoint did not respond to a CAR ID request.	Please select one of the offered solutions below. • Reset and initialize the component again. • Error cannot be repaired. Stop module and call service. • Disable component until next restart.

Related information...

Message codes, page 64

Message code: 20300

CAR lost during sample transport.

Details	Solutions
The CAR used for sample transport left unexpectedly from AccessPoint. CAR with ID: (0). 0 = CAR ID	Please select one of the offered solutions below. • The tube was removed from gripper by pressing the grippers release button.

Related information...

Message codes, page 64

Message code: 20901

Teach positions not valid.

Details	Solutions
Robot (0). 0 = Robot type	Please select one of the offered solutions below. • Check the teach-in positions.

Related information...

Message codes, page 64

Message code: 20902

Invalid reference positions.

Probable cause	Corrective action
An error has occurred.	1. Correct the error by following the instructions on the touchscreen user interface. 2. If the error cannot be corrected, contact an Abbott Laboratories representative or an authorized service representative.

Related information...

Message codes, page 64

Message code: 20910

Configuration data checksum error.
The checksum of the configuration data is invalid.

Probable cause	Corrective action
An error has occurred.	1. Correct the error by following the instructions on the touchscreen user interface. 2. If the error cannot be corrected, contact an Abbott Laboratories representative or an authorized service representative.

Related information...

Message codes, page 64

Message code: 20911

Unexpected position detected.

Details	Solutions
Not applicable.	Please select one of the offered solutions below. • Check the orientation of the robot axes.

Related information...

Message codes, page 64

Message code: 20912

Wrong firmware detected for a component.

Details	Solutions
FW version (0) is detected. FW version (1) is needed. 0 = Current FW version 1 = Supported FW version	Please select one of the offered solutions below. • Component was updated. Please reinitialize. • Error cannot be repaired. Stop module and call service.

Related information...

Message codes, page 64

Message code: 21000

Robot initialization error.

Details	Solutions
Axis: (0). 0 = Robot axis	Please select one of the offered solutions below. • Reset and initialize the component again.

Related information...

Message codes, page 64

Message code: 21001

Robot invalid parameter detected.

Details	Solutions
Parameter: (1). 1 = Parameter name	Please select one of the offered solutions below. • Ignore error message.

Related information...

Message codes, page 64

Message code: 21002

Robot invalid position detected.

Details	Solutions
Axis: (0). 0 = Robot axis	Please select one of the offered solutions below. • Remove error status flag from Robot.

Related information...

Message codes, page 64

Message code: 21003

Invalid robot PICCOLA controller CAN ID.

Details	Solutions
Not applicable.	Please select one of the offered solutions below. • Change robot status to defect.

Related information...

Message codes, page 64

Message code: 21004

Robot crash detected.

Details	Solutions
Axis: (0). 0 = Robot axis	Please select one of the offered solutions below. • Reset and initialize the component again. • Change robot status to defect.

Related information...

Message codes, page 64

Message code: 21005

Robot hardware error.

Details	Solutions
Not applicable.	Please select one of the offered solutions below. • Remove error status flag from Robot.

Related information...

Message codes, page 64

Message code: 21006

Robot is unresponsive.

Details	Solutions
Axis: (0). 0 = Robot axis	Please select one of the offered solutions below. • Reset and initialize the component again.

Related information...

Message codes, page 64

Message code: 21008

Missing sensor signal at robot.

Details	Solutions
Axis: (0). 0 = Robot axis	Please select one of the offered solutions below. • Reset and initialize the component again.

Related information...

Message codes, page 64

Message code: 21009

Invalid robot PICCOLA controller hardware version.
Hardware: (1)
1 = PICCOLA controller hardware version

Probable cause	Corrective action
An error has occurred.	1. Correct the error by following the instructions on the touchscreen user interface.

Probable cause	Corrective action
	2. If the error cannot be corrected, contact an Abbott Laboratories representative or an authorized service representative.

Related information...

Message codes, page 64

Message code: 21010

Unexpected obstacles detected.
Axis: (0)
0 = Robot axis

Probable cause	Corrective action
An error has occurred.	1. Correct the error by following the instructions on the touchscreen user interface. 2. If the error cannot be corrected, contact an Abbott Laboratories representative or an authorized service representative.

Related information...

Message codes, page 64

Message code: 21013

Unknown robot command.

Details	Solutions
Command: (1). 1 = Robot command	Please select one of the offered solutions below. • Change robot status to defect.

Related information...

Message codes, page 64

Message code: 21014

Robot PICCOLA communication error.

Details	Solutions
Program: (1). 1 = Program version	Please select one of the offered solutions below. • Reset and initialize the component again.

Related information...

Message codes, page 64

Message code: 21015

Hardware CAN ID does not match Software CAN ID.

Probable cause	Corrective action
An error has occurred.	1. Correct the error by following the instructions on the touchscreen user interface. 2. If the error cannot be corrected, contact an Abbott Laboratories representative or an authorized service representative.

Related information...

Message codes, page 64

Message code: 21016

Invalid firmware version for PICCOLA controller.

Details	Solutions
Firmware: (1). 1 = Firmware version	Please select one of the offered solutions below. • Change robot status to defect.

Related information...

Message codes, page 64

Message code: 21017

Invalid PICCOLA chipset.

Details	Solutions
Chipset: (1). 1 = Chipset number	Please select one of the offered solutions below. • Change robot status to defect.

Related information...

Message codes, page 64

Message code: 21018

Invalid PICCOLA extension ID.

Probable cause	Corrective action
An error has occurred.	1. Correct the error by following the instructions on the touchscreen user interface. 2. If the error cannot be corrected, contact an Abbott Laboratories representative or an authorized service representative.

Related information...

Message codes, page 64

Message code: 21019

Robot end position not detected.

Details	Solutions
Axis: (0). 0 = Robot axis	Please select one of the offered solutions below. • Reset and initialize the component again.

Related information...

Message codes, page 64

Message code: 21022

No cap found. Please check gripper for contamination.

Details	Solutions
Not applicable.	Please select one of the offered solutions below. • As necessary, remove tube from the gripper. Please confirm that the tube is removed by pressing the gripper release button.

Related information...

Message codes, page 64

Message code: 21023

Robot axis length out of tolerance.

Details	Solutions
Check the axis length and belt tension. Axis: (0). 0 = Robot axis	Please select one of the offered solutions below. • Change robot status to defect.

Related information...

Message codes, page 64

Message code: 21034

Robot temperature out of range.

Details	Solutions
Temperature: (1). 1 = Temperature value	Please select one of the offered solutions below. • Change robot status to defect.

Related information...

Message codes, page 64

Message code: 21036

Robot power error.

Details	Solutions
Status: (1). 1 = Robot status	Please select one of the offered solutions below. • Change robot status to defect.

Related information...

Message codes, page 64

Message code: 21037

Unexpected gripper operation detected.

Probable cause	Corrective action
An error has occurred.	1. Correct the error by following the instructions on the touchscreen user interface. 2. If the error cannot be corrected, contact an Abbott Laboratories representative or an authorized service representative.

Related information...

Message codes, page 64

Message code: 21050

Unknown error (1).

1 = Error code

Details	Solutions
Axis: (0).	Please select one of the offered solutions below.

Details	Solutions
0 = Robot axis	• Reset and initialize the component again.

Related information...

Message codes, page 64

Message code: 22200

Locking failed.

Details	Solutions
Not applicable.	Please select one of the offered solutions below. • Reset and initialize the component again. • Error cannot be repaired. Stop module and call service.

Related information...

Message codes, page 64

Message code: 22201

Unlocking failed.

Details	Solutions
Not applicable.	Please select one of the offered solutions below. • Reset and initialize the component again. • Error cannot be repaired. Stop module and call service.

Related information...

Message codes, page 64

Message code: 22202

Lock not responding.

Details	Solutions
Not applicable.	Please select one of the offered solutions below. • Reset and initialize the component again. • Error cannot be repaired. Stop module and call service.

Related information...

Message codes, page 64

Message code: 22400

Item in sensor.

Probable cause	Corrective action
An error has occurred.	Contact an Abbott Laboratories representative or an authorized service representative.

Related information...

Message codes, page 64

Message code: 22401

Double cap detected.

Probable cause	Corrective action
An error has occurred.	Contact an Abbott Laboratories representative or an authorized service representative.

Related information...

Message codes, page 64

Message code: 22402

Magazine blocked.

Probable cause	Corrective action
An error has occurred.	Contact an Abbott Laboratories representative or an authorized service representative.

Related information...

Message codes, page 64

Message code: 23000

Requested dialog file for ID (0) could not be found.

0 = Dialog ID number

Details	Solutions
Not applicable.	Please select one of the offered solutions below. • Error cannot be repaired. Stop module and call service.

Related information...

Message codes, page 64

Message code: 23001

No dialog options found.

Details	Solutions
Could not find dialog options for dialog (0). 0 = Dialog ID number	Please select one of the offered solutions below. • Error cannot be repaired. Stop module and call service.

Related information...

Message codes, page 64

Message code: 23002

Unknown dialog type for dialog ID (0) received by the display.

0 = Dialog ID number

Details	Solutions
Not applicable.	Please select one of the offered solutions below. • Error cannot be repaired. Stop module and call service.

Related information...

Message codes, page 64

Message code: 23003

Invalid dialog ID (0) received by the display.

0 = Dialog ID number

Details	Solutions
Not applicable.	Please select one of the offered solutions below. • Error cannot be repaired. Stop module and call service.

Related information...

Message codes, page 64

Message code: 23004

Unknown display dialog error for dialog ID (0) occurred.

0 = Dialog ID number

Details	Solutions
Not applicable.	Please select one of the offered solutions below. • Error cannot be repaired. Stop module and call service.

Related information...

Message codes, page 64

Message code: 25150

Lock not configured.

Details	Solutions
Not applicable.	Please select one of the offered solutions below. • Error cannot be repaired. Stop module and call service.

Related information...

Message codes, page 64

Recapper Module observed problems

Observed problems provide information about problems that may occur on the Recapper Module and provide corrective actions that help to resolve the problems.

If the corrective actions for an observed problem do not resolve the problem, contact the local representative or find country-specific contact information at corelaboratory.abbott.

Related information...

Troubleshooting, page 63
CAR with sample does not move to the module, page 86
CAR with sample is not held in place at the AccessPoint, page 87
CAR stops at the AccessPoint and then will not move, page 87
Samples are not sealed, page 87
ReCaps are lost, page 87
Error message is displayed, page 88
Robot does not respond, page 88
Pullout compartment does not open or close, page 88
Samples stick to the clamping jaws, page 88
Touchscreen user interface and push buttons do not respond, page 89
Touchscreen user interface does not respond, page 89
Module cover does not remain in position when opened, page 89

CAR with sample does not move to the module

Probable cause	Corrective action
A module error occurred.	Follow the error dialog on the touchscreen user interface.
Errors with the Track Sample Manager (TSM) or Track Workflow Manager (TWM) occurred.	1. Verify the TSM or TWM connection. 2. Contact an Abbott Laboratories representative or an authorized service representative if necessary.
An error or defect occurred involving the switch.	Contact an Abbott Laboratories representative or an authorized service representative.

Related information...

Recapper Module observed problems, page 86

CAR with sample is not held in place at the AccessPoint

Probable cause	Corrective action
An error occurred at the AccessPoint.	Contact an Abbott Laboratories representative or an authorized service representative.

Related information...

Recapper Module observed problems, page 86

CAR stops at the AccessPoint and then will not move

Probable cause	Corrective action
An error occurred at the AccessPoint.	1. *Cycle power to the module*, page 36. 2. Contact an Abbott Laboratories representative or an authorized service representative if necessary.

Related information...

Recapper Module observed problems, page 86

Samples are not sealed

Probable cause	Corrective action
The robot gripper is defective.	Contact an Abbott Laboratories representative or an authorized service representative.

Related information...

Recapper Module observed problems, page 86

ReCaps are lost

Probable cause	Corrective action
The robot gripper is defective.	Contact an Abbott Laboratories representative or an authorized service representative.

Related information...

Recapper Module observed problems, page 86

Error message is displayed

Probable cause	Corrective action
An error has been detected.	1. Follow the error dialog on the touchscreen user interface. 2. Contact an Abbott Laboratories representative or an authorized service representative if necessary.

Related information...

Recapper Module observed problems, page 86

Robot does not respond

Probable cause	Corrective action
A robot error or a mechanical problem occurred.	1. Follow the error dialog on the touchscreen user interface. 2. *Cycle power to the module*, page 36. 3. Contact an Abbott Laboratories representative or an authorized service representative if necessary.

Related information...

Recapper Module observed problems, page 86

Pullout compartment does not open or close

Probable cause	Corrective action
Pullout compartment locking mechanism is defective.	Follow the error dialog on the touchscreen user interface. Contact an Abbott Laboratories representative or an authorized service representative.

Related information...

Recapper Module observed problems, page 86

Samples stick to the clamping jaws

Probable cause	Corrective action
Glue residue left by the labels on the clamping jaws.	1. Remove any glue residue left by the labels. 2. Contact an Abbott Laboratories representative or an authorized service representative if necessary.

Related information...

Recapper Module observed problems, page 86

Touchscreen user interface and push buttons do not respond

Probable cause	Corrective action
A hardware error occurred.	1. Locate the leftmost power switch at the rear of the module. If the power switches cannot be located, contact an Abbott Laboratories representative or an authorized service representative. 2. Move the leftmost power switch to the Off position to turn off the power. 3. After the module is powered off, wait for a minimum of 1 minute. 4. Move the leftmost power switch to the On position. As soon as the power supply has been restored, perform *Power on the module*, page 38. 5. Contact an Abbott Laboratories representative or an authorized service representative if necessary. For information regarding emergency shutdown, refer to the GLP systems Track Operations Manual.

Related information...

Recapper Module observed problems, page 86

Touchscreen user interface does not respond

Probable cause	Corrective action
A software error occurred.	1. *Cycle power to the module*, page 36. 2. If the error cannot be corrected, contact an Abbott Laboratories representative or an authorized service representative.

Related information...

Recapper Module observed problems, page 86

Module cover does not remain in position when opened

Probable cause	Corrective action
A hardware error occurred.	Contact an Abbott Laboratories representative or an authorized service representative.

Related information...

Recapper Module observed problems, page 86

Revision history

Document control number	Revision date	Content revised
80004210-101	YYYY-MM-DD	DRAFT

NOTES

Index

A

accessing
  Configuration screen, 24
  Information screen, 24
  Login screen, 23
AccessPoint clamping jaws
  replacing, 60
acknowledging
  message code, 66
as-needed cleaning procedures
  clean the AccessPoint, 58
  clean the interior, 57
  clean the robot gripper, 58

C

cleaning
  AccessPoint, 58
  description of, 55
  interior, 57
  module covers, 56
  monitor, 55
  pullout compartment, 57
  robot gripper, 58
closing
  module covers, 34
Configuration screen
  accessing, 24
  description of, 24
cycling
  power, 36

D

deactivating
  pause mode, 41

G

general safety information
  overview, 7

H

hazards
  overview, 49

I

Information screen
  accessing, 24
  description of, 24
installation procedures and special requirements
  overview, 19

L

Login screen
  accessing, 23
  description of, 22

M

Main menu screen
  illustration of, 22
maintenance
  description of, 60
maintenance checks, 54
message code
  acknowledging, 66
Message code screen
  description of, 65
module
  cycling power, 36
  opening and closing front and rear module covers, 34
  operation, 34
  pausing, 40
  placing offline, 40
  placing online, 39
  powering off, 39
  powering on, 38

O

observed problems
  description of, 86
opening
  module covers, 34
operating instructions
  description of, 33
operational precautions and limitations
  impact of failure to comply, 47

P

pause mode
  deactivating, 41
pausing
  module, 40
performance characteristics and specifications
  overview, 29
placing offline
  module, 40
placing online
  module, 39
powering off
  module, 39
powering on
  module, 38
principles of operation
  overview, 27
proprietary statement
  description of, 8
pullout compartment
  cleaning, 57

R

read me first
  overview, 5
Recapper Module
  description of, 10
  illustration of, 10
replacing
  AccessPoint clamping jaws, 60
  revolvers, 41
revolvers
  replacing, 41

S

statuses
  descriptions of module statuses, 17

T

troubleshooting
  overview, 63

U

use or function
  description of, 9

W

weekly cleaning procedures
  clean the module covers, 56
  clean the monitor, 55

Abbott