Abbott

TAC on Track

Supplemental Manual

For use with the GLP systems Track Laboratory Automation System and the TAC on Track

80004208-101

Table of contents

Read me first.....5
General safety information.....7
Proprietary statement.....8
Section 1: Use or function.....9
TAC on Track overview.....10
Design and function.....10
Section 2: Installation procedures and special requirements.....15
TAC on Track installation requirements.....16
Section 3: Principles of operation.....19
Section 4: Performance characteristics and specifications.....21
Technical data.....22
Sample processing specifications.....22
Section 5: Operating instructions.....25
Open and close the track hood.....26
Open and close the TAC outer cover.....28
Open and close the TAC inner cover.....30
Power on the TAC on Track.....33
Power off the TAC on Track.....35
Section 6: Operational precautions and limitations.....37
Section 7: Hazards.....39
Safety icons.....40
Section 8: Service, maintenance, and diagnostics.....43
Cleaning and maintenance checks.....44
Cleaning.....45
As-needed cleaning procedures.....45
Section 9: Troubleshooting.....49
Message codes.....50
TAC on Track observed problems.....51

NOTES

Foreword

This supplemental manual is intended for the relevant laboratory staff operating the TAC on Track.

Ensure that this supplemental manual is read and understood before startup is performed.

This supplemental manual contains information on the TAC on Track properties and handling, and instructions and measures for maintaining its operational readiness.

The GLP systems Track laboratory automation system is a modular, customer-specific design. This supplemental manual refers only to the TAC on Track. Ensure that the manuals relating to each single component are observed. In addition, observe the manuals for the connected analyzers.

The features in this supplemental manual were introduced in software 6.3.X.

Original instructions of this manual are written in English. Other languages are translations of the original instructions.

For an electronic copy of this manual, go to corelaboratory.abbott/ifu.

For laboratory professional use only.

Refer to the GLP systems Track Operations Manual for the following information:

- System security
- Customer service
- Intended use
- Disclaimers
- GLP systems Track warranty statement for USA customers only
- GLP systems Track agency approvals
- Intellectual Property statement
- Key to symbols
- Manufacturer and distributor
- Covers, hoods, and sensors
- Requirements for handling the specimens
- Operator responsibility
- Biological hazards
- Precautions
- Spill cleanup
- Requirements for decontamination
- Glossary

Related information...

General safety information, page 7
Proprietary statement, page 8

General safety information

Before operating the TAC on Track, you should read and understand the safety information in this manual.

For information about actions or conditions that can affect system performance, carefully review the operational precautions and limitations in the GLP systems Track Operations Manual.

To become familiar with safety icons on the module and in this manual that indicate potentially hazardous situations, review the hazards in the GLP systems Track Operations Manual. Comply with the hazard and safety information to minimize the potential for harm to personnel and damage to the laboratory environment.

The sections for operational precautions and limitations and for hazards in the GLP systems Track Operations Manual contain supplemental information. Do not use the supplemental information to supersede workplace safety requirements. Review any significant differences between the supplemental information and the workplace safety requirements with management or a workplace safety representative.

This device complies with part 15 of the FCC Rules. Operation is subject to the following two conditions: (1) This device may not cause harmful interference, and (2) this device must accept any interference received, including interference that may cause unwanted operation.

This device complies with Industry Canada license-exempt RSS standards. Operation is subject to the following two conditions: (1) This device may not cause interference, and (2) this device must accept any interference, including interference that may cause unwanted operation of the device.

The TAC on Track is state-of-the-art. However, residual dangers exist. The safety instructions must be read and observed. The manufacturer accepts no liability for failure to observe the safety instructions.

Refer to the GLP systems Track Operations Manual for the complete listing of all safety information.

Related information...

Read me first, page 5

Operational precautions and limitations, page 37

Hazards, page 39

Proprietary statement

The TAC on Track system documentation (© 2023 Abbott. All rights reserved.) and software programs are protected by copyright.

The software and manual were developed solely for use with the laboratory automation system as specified in the operating instructions.

The information, documents and related graphics published herein (the "Information") are the sole property of Abbott Laboratories. Permission to use the Information is granted, provided that:

- the copyright notice appears on all copies;
- use of the Information is for operation of ABBOTT products by Abbott Laboratories trained personnel or informational use only;
- the Information is not modified in any way; and
- no graphics are used separate from accompanying text.

Each person assumes full responsibility and all risks arising from use of the Information herein. The Information is presented "AS IS" without warranties, either express or implied, and may include technical inaccuracies or typographical errors. Abbott Laboratories reserves the right to make additions, deletions, or modifications to the Information at any time without any prior notification.

Related information...

Read me first, page 5

Introduction

The GLP systems Track is a modular laboratory automation system (LAS) designed to automate pre-analytical and post-analytical processing, including sample handling, in order to automate sample processing in clinical laboratories. The system consolidates multiple analytical instruments into a unified workflow. The TAC on Track is a Tube Assessment Center (TAC) on a track. The TAC on Track is an optional instrument of the GLP systems Track that a customer may choose to include in their LAS configuration. The TAC on Track is a stand-alone functional unit. It contains a camera to detect sample tube types and a scale to determine the sample tube weight to aid in centrifuge balancing.

Related information...

TAC on Track overview, page 10

TAC on Track overview

The TAC on Track has a camera system to determine tube characteristics and a scale to determine the weight of the samples for centrifugation. The TAC on Track operates automatically and is controlled by the Track Sample Manager.

Related information...

Use or function, page 9
Design and function, page 10

Design and function

The TAC on Track consists of the following components:

Figure 1: Exterior view of the TAC on Track

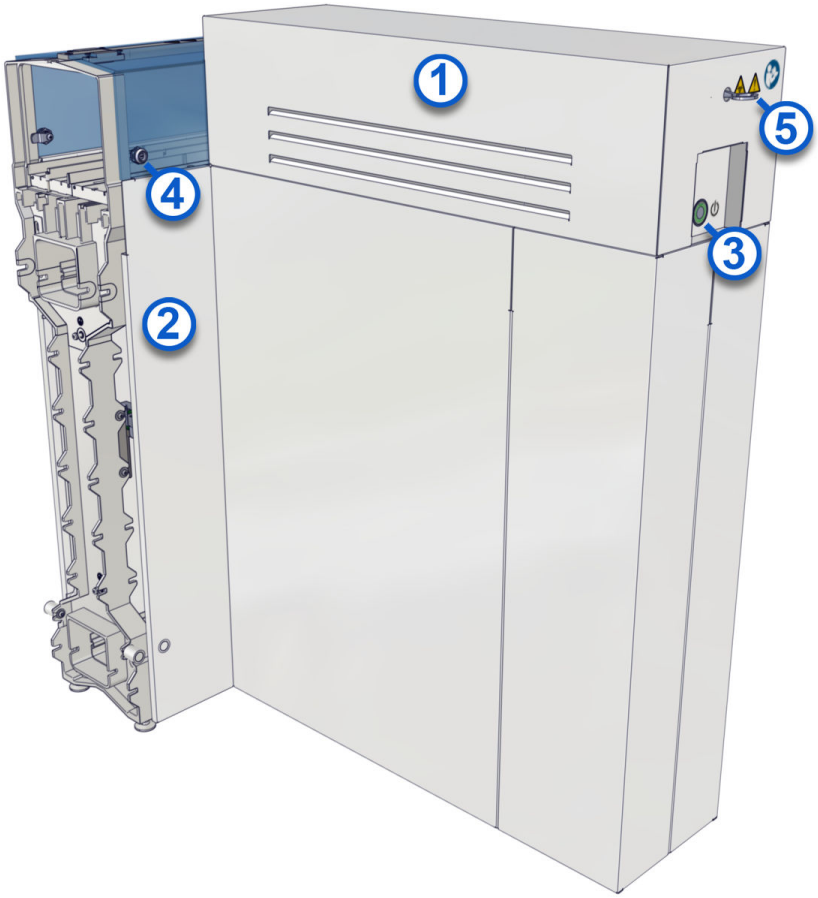

Legend:

1. TAC outer cover: Blocks the light and keeps the TAC on Track free from dust.

2. Track: Composed of lane elements and serves as the structure along which CARs move to transport samples to modules.
3. On/Off push button: Powers on and powers off the TAC camera and lighting.
4. Track hood lock: Secures the track hood.
5. Lock: Secures the TAC outer cover. A key unlocks the TAC outer cover.

Figure 2: On/Off push button

Legend:

1. On/Off push button: Powers on and powers off the TAC camera and lighting.

Figure 3: Interior view of the TAC on Track

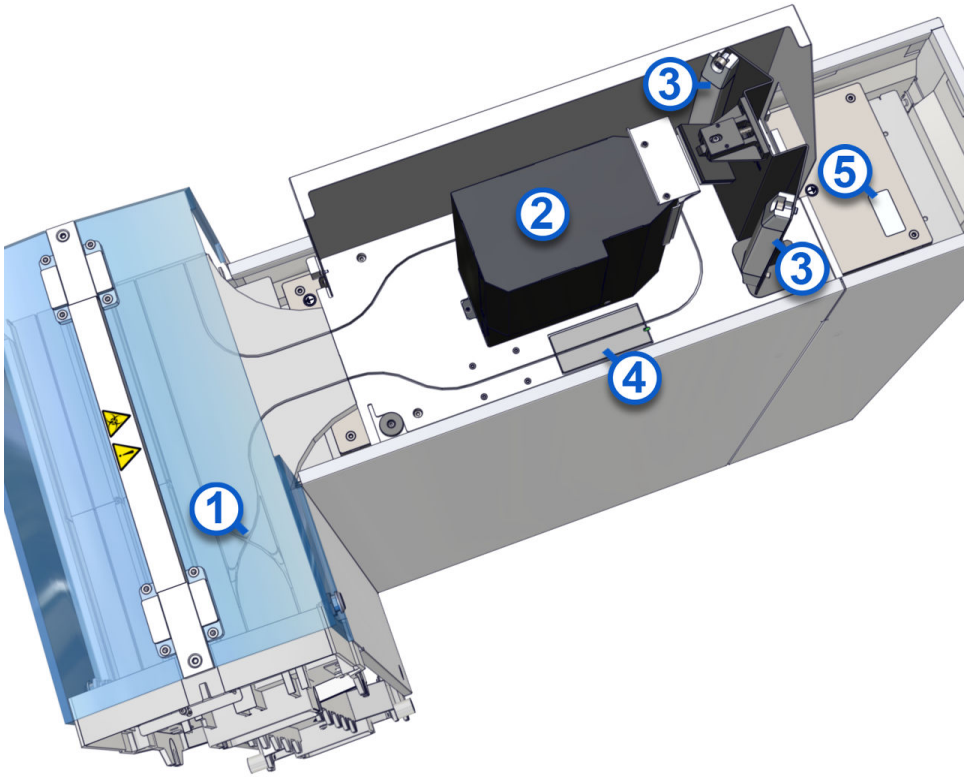

Legend:

1. Cross switch: Enables CARs to switch lanes and routes them into the TAC on Track.
2. Camera housing: Contains the camera that photographs the sample tube.
3. LED lamps: Provide constant lighting conditions for the camera.
4. Scale: Measures the weight of sample tubes.
5. Module serial number label: Located in the interior of the module.

Figure 4: LED lamps through the TAC outer cover

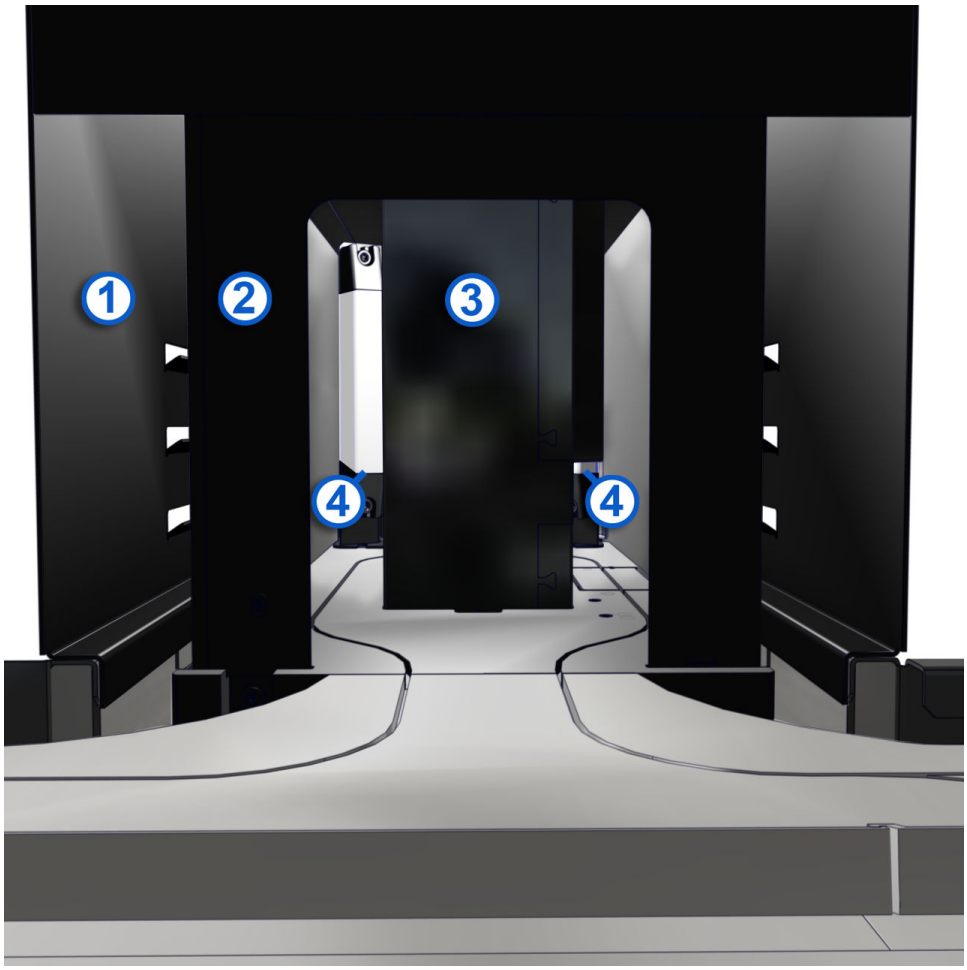

Legend:

1. TAC outer cover: Blocks light and keeps the TAC on Track free from dust.
2. TAC inner cover: Blocks light and keeps the TAC on Track free from dust.
3. Camera housing: Contains the camera that photographs the sample tube.
4. LED lamps: Provide constant lighting conditions for the camera.

Related information...

TAC on Track overview, page 10
Descriptions of module statuses, page 13

Descriptions of module statuses

Module status refers to the operational modes of the module. The module has the following statuses:

On	The On/Off push button is illuminated steady green.

Off	The On/Off push button is illuminated steady yellow.

Related information...

Design and function, page 10

Introduction

For optimal system performance, the TAC on Track must be correctly installed. After the system has been installed, it must be configured to meet individual laboratory requirements.

Related information...

TAC on Track installation requirements, page 16

TAC on Track installation requirements

The TAC on Track may only be installed indoors. Water connections are not required. Contact an Abbott Laboratories representative or an authorized service representative for more information about service requirements. Facilities must fulfill the floor area and height requirements.

Table 1: Floor area requirements

Load-bearing weight	147 kg/m^2
Evenness tolerance	Permissible deviation: ± 5 mm over 15 m
Compensation with adjustable feet	Maximum of 10 mm
Material	Incompressible material such as concrete
Work and service area	44 cm (width) x 279 cm (depth)

Figure 5: Floor area measurements in meters

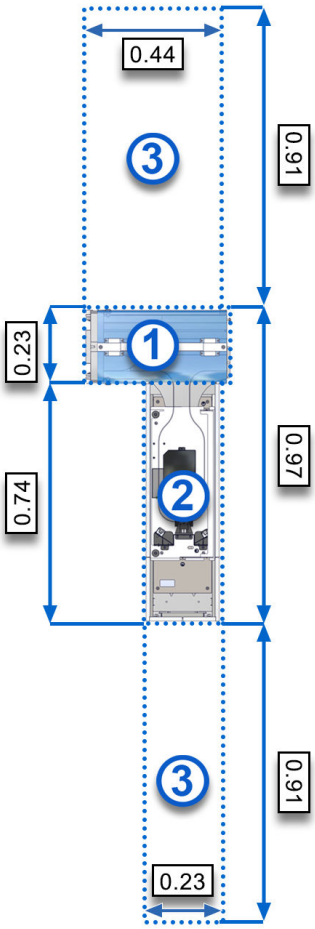

1. Track

2. TAC on Track
3. Work and service areas

Figure 6: Height measurements in meters

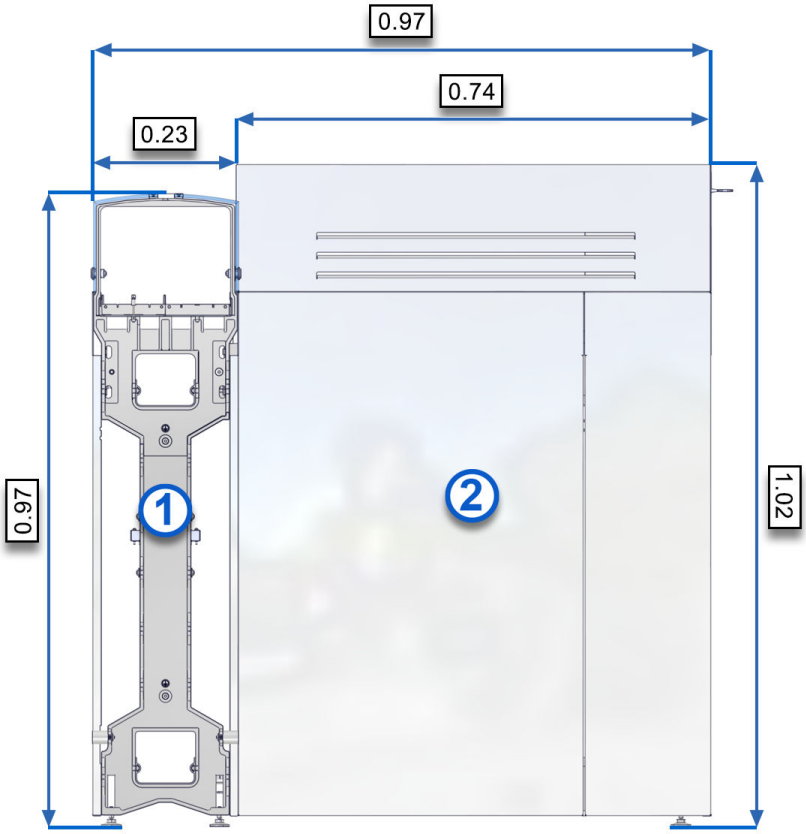

1. Track
2. TAC on Track

Related information...

Installation procedures and special requirements, page 15
Technical data, page 22

NOTES

Introduction

A reference image is used to identify the sample tube type. If no known sample tube type can be assigned to a sample tube, this sample is routed to the error area of the Input/Output Module (IOM). Samples are loaded into an input module such as the IOM and are routed to the TAC on Track. The TAC on Track determines tube characteristics for centrifugation. The scale measures the weight of each sample tube and the camera system photographs a reference image, which is used to uniquely identify the sample tube type based on the following criteria:

- Tube size (height x diameter)
- Tube type (capped or uncapped)
- Cap type
- Cap color

The information from the TAC on Track is relayed to the Track Sample Manager. If no known sample tube type can be assigned to a sample, this sample is routed to the error area of the IOM.

NOTE: The Tube Assessment Module is an IOM that has been equipped with a TAC. The fourth drawer of the IOM is replaced with the TAC.

NOTES

Introduction

Before operating the TAC on Track, become familiar with system performance characteristics.

Related information...

Technical data, page 22

Technical data

Table 2: System characteristics

Throughput	Minimum of 900 capped sample tubes per hour **NOTE:** The specified performance of the module is based on measurements taken in a given test environment. The actual performance may vary significantly depending on the use scenario of the laboratory automation system.
Scale precision	± 0.6 g (CAR speed of 45 mm/s)
Dimensions	Without track: 74 cm (width) × 23 cm (depth) × 102 cm (height)
Weight	Without track: 64.5 kg (141.9 lb)
Altitude	30.8 m (100 ft) below sea level to 2000 m (6561 ft) above sea level
Ambient temperature	During operation: 15°C to 30°C
Relative humidity	During operation: 30% to 80%, noncondensing
Sound pressure level	Maximum of 65 dBA
Waste heat	Average at full capacity: 108 kJ/h
Supply voltage	24 V DC
Power	• Nominal: 18 W • Peak: 21 W • 19 W Max
Electrical safety parameters **NOTE:** Electrical safety parameters have no bearing on performance.	• Installation category: II (overvoltage category) • Pollution degree: 2

Related information...

Performance characteristics and specifications, page 21
Sample processing specifications, page 22
TAC on Track installation requirements, page 16

Sample processing specifications

Due to specific sample processing possibilities on the modules of the GLP systems Track and due to manufacturer specifications of the connected analyzers, there are deviations and restrictions for sample processing.

For more information regarding sample tube technical data, refer to the GLP systems Track Operations Manual.

Related information...

Technical data, page 22

NOTES

Introduction

This section provides instructions on how to perform normal operating procedures on the TAC on Track.

Before operating the system, become familiar with hardware components of the system.

Related information...

Open and close the track hood, page 26
Open and close the TAC outer cover, page 28
Open and close the TAC inner cover, page 30
Power on the TAC on Track, page 33
Power off the TAC on Track, page 35

Open and close the track hood

Required materials Key

Perform this procedure to open and close the track hood.

CAUTION: Biological RISKS. This activity or area may expose the operator to potentially infectious material.

1. To unlock the track hood, insert the key [2] into the lock [1] of the track hood and turn clockwise to open the track hood.

   Figure 7: Track hood lock and key

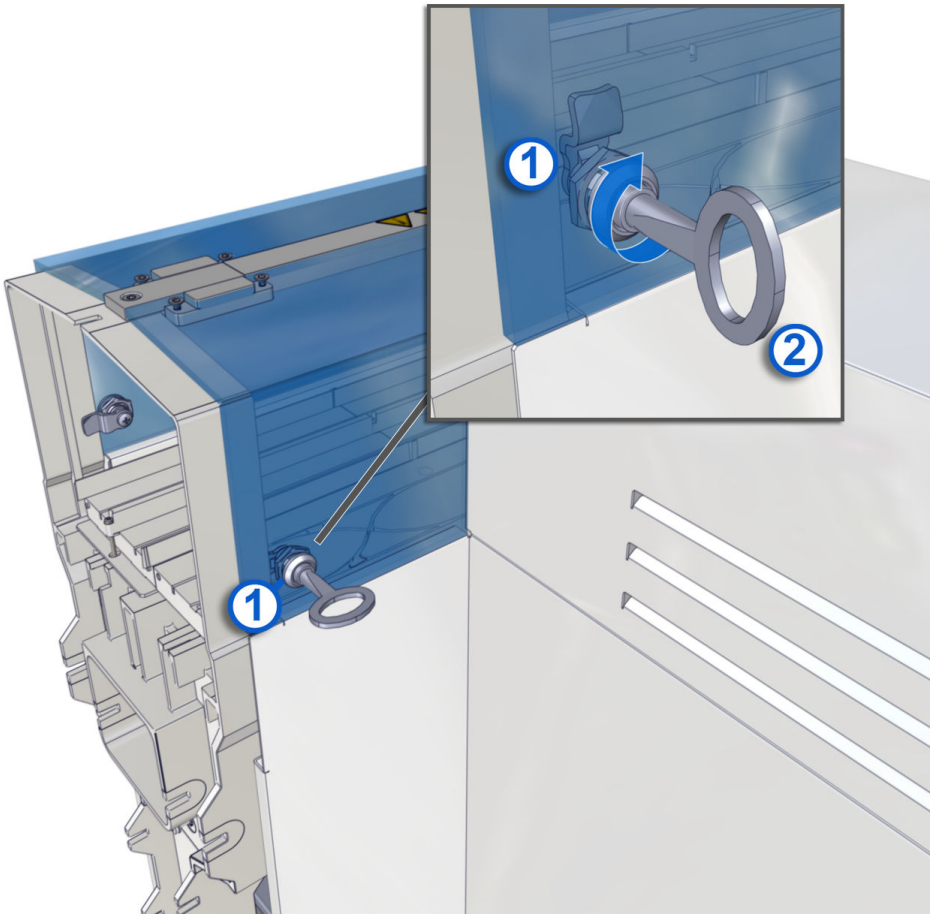

2. Open the track hood.

Figure 8: Track hood opened

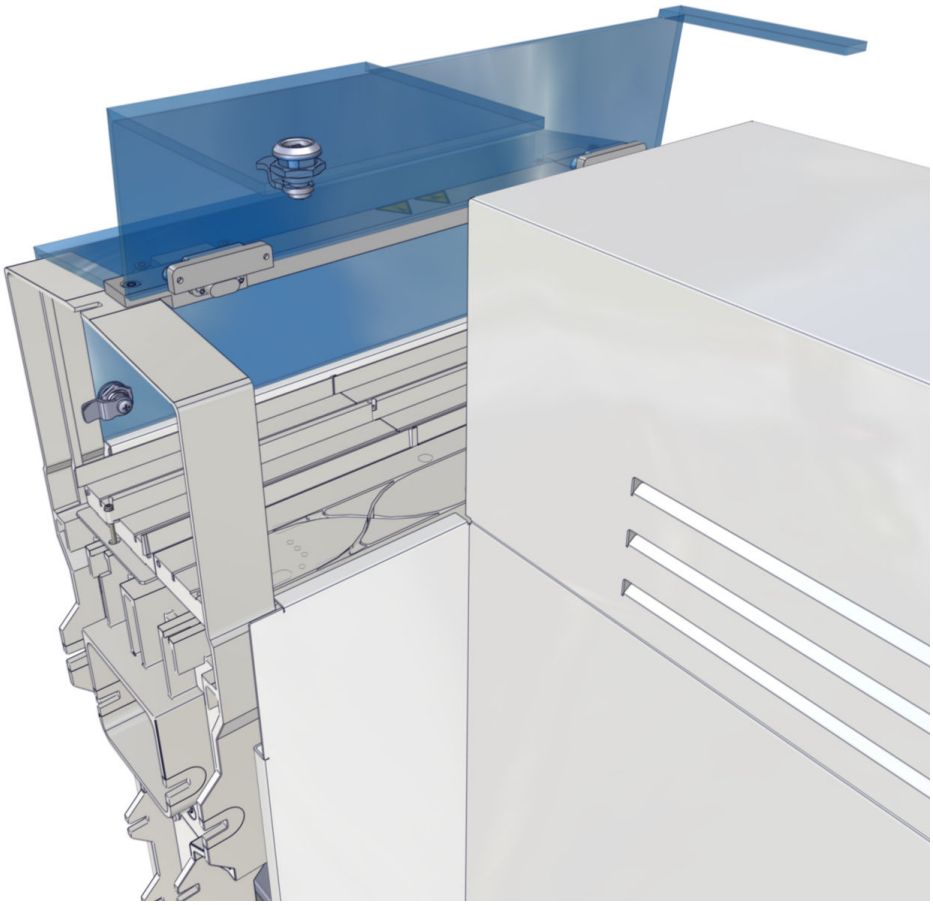

3. To lock the track hood, close the track hood.
4. Insert the key [2] into the lock [1] of the track hood and turn counterclockwise.

Related information...

Operating instructions, page 25
Clean the lane elements, page 46

Open and close the TAC outer cover

Prerequisite	• The On/Off push button is illuminated steady yellow. • The track hood must be unlocked and opened.
Required module status	Off
Required materials	Key

Perform this procedure to open and close the TAC outer cover.

1. Insert the key [2] into the lock [1] and turn counterclockwise to unlock the TAC outer cover.

   Figure 9: TAC outer cover lock and key

2. Remove the key [2] from the lock [1].
3. Remove the TAC outer cover.

Figure 10: TAC interior after removing the TAC outer cover

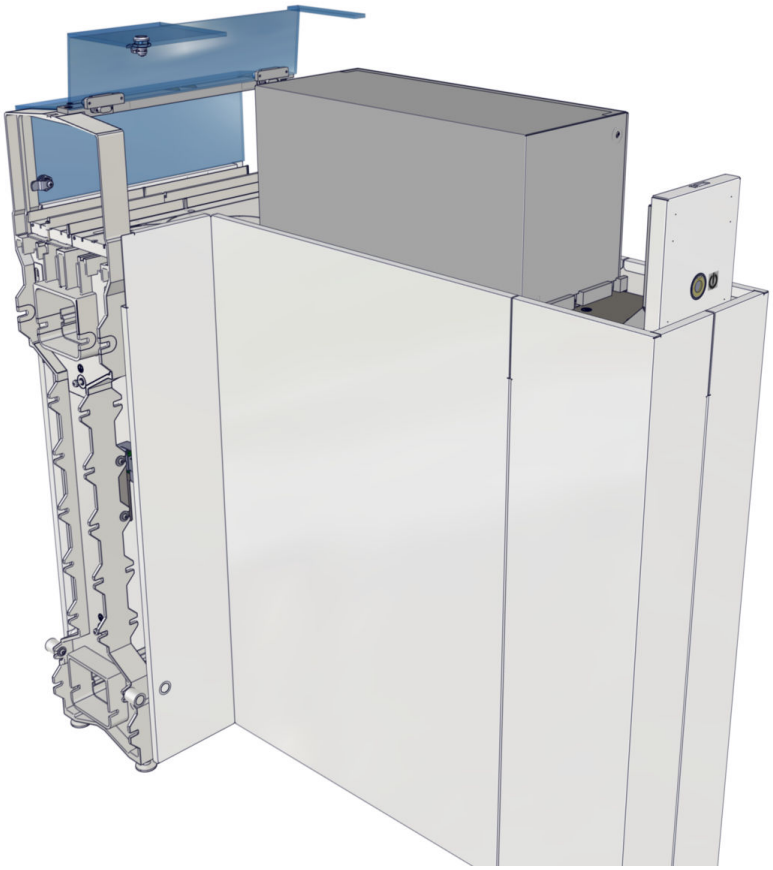

4. To close the TAC outer cover, place the TAC outer cover back onto the TAC on Track.
5. Insert the key [2] into the lock [1] and turn clockwise to close the TAC outer cover.

Related information...

Operating instructions, page 25
Clean the lane elements, page 46

Open and close the TAC inner cover

Prerequisite	• The On/Off push button is illuminated steady yellow. • The track hood must be unlocked and opened. • The TAC outer cover is removed.
Required module status	Off
Required materials	Tx10 Torx screwdriver

Perform this procedure to open and close the TAC inner cover.

1. To open the TAC inner cover, loosen the two screws [1] from the TAC inner cover with the Tx10 Torx screwdriver.

   Figure 11: TAC inner cover casing with screws

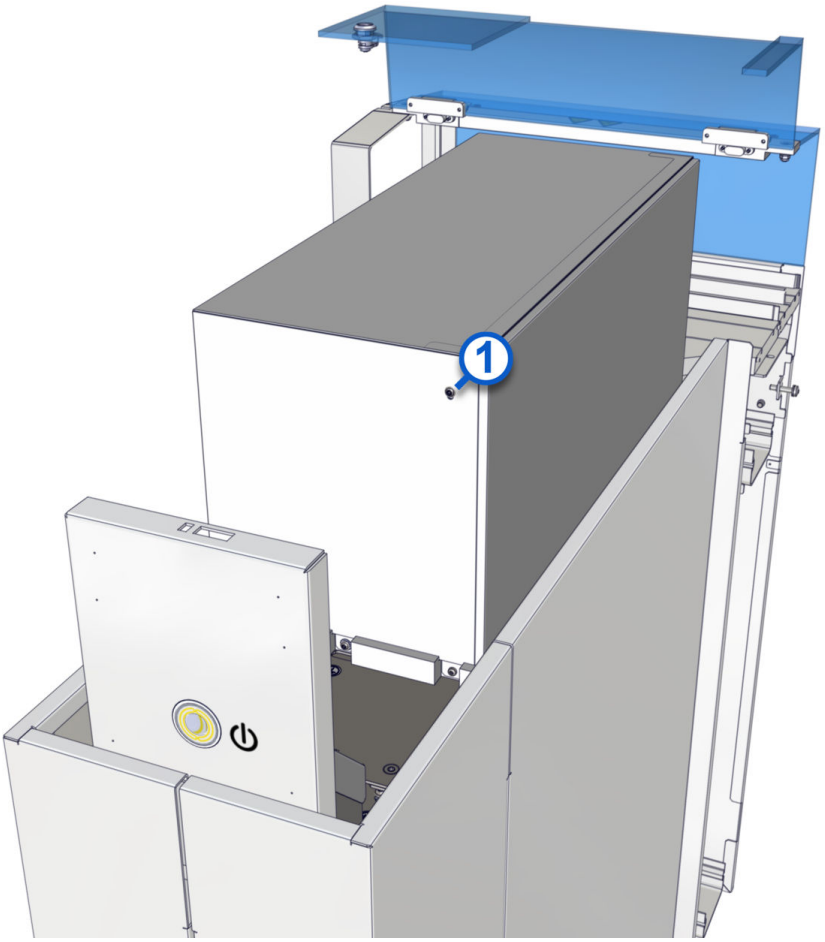

Figure 12: TAC inner cover casing with screws

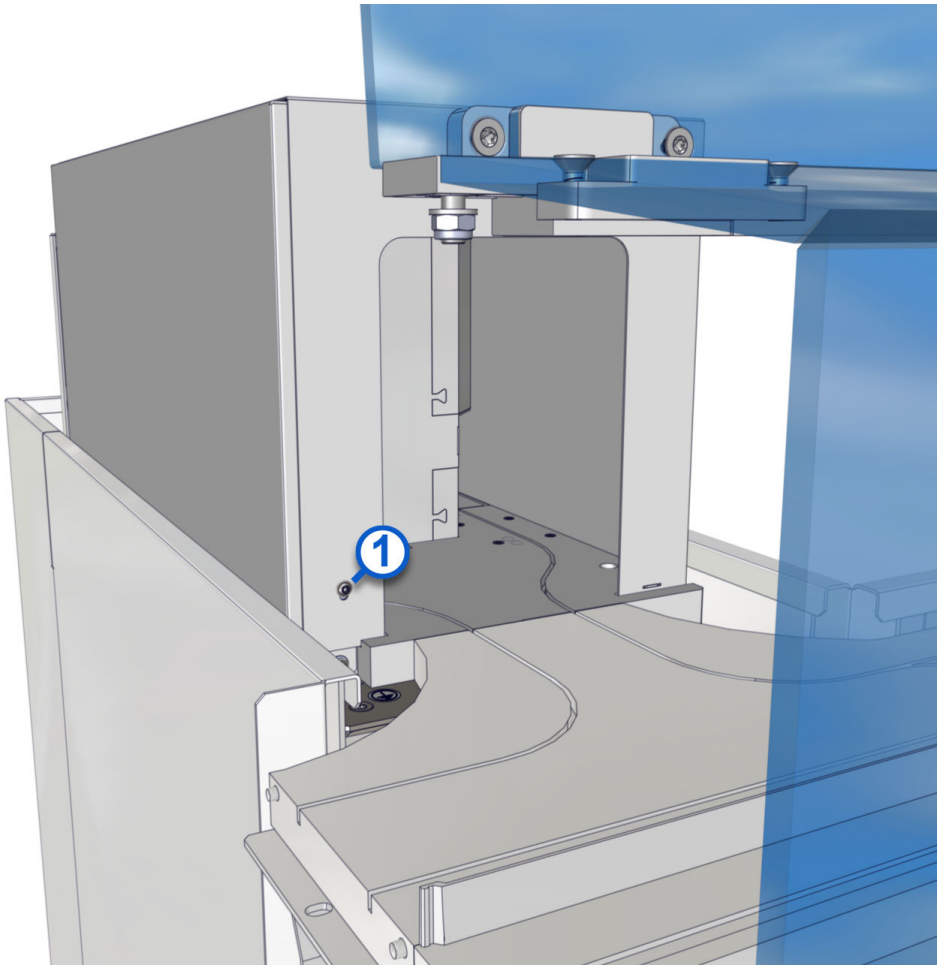

2. Remove the screws [1].
3. Remove the TAC inner cover.

Figure 13: TAC inner cover interior

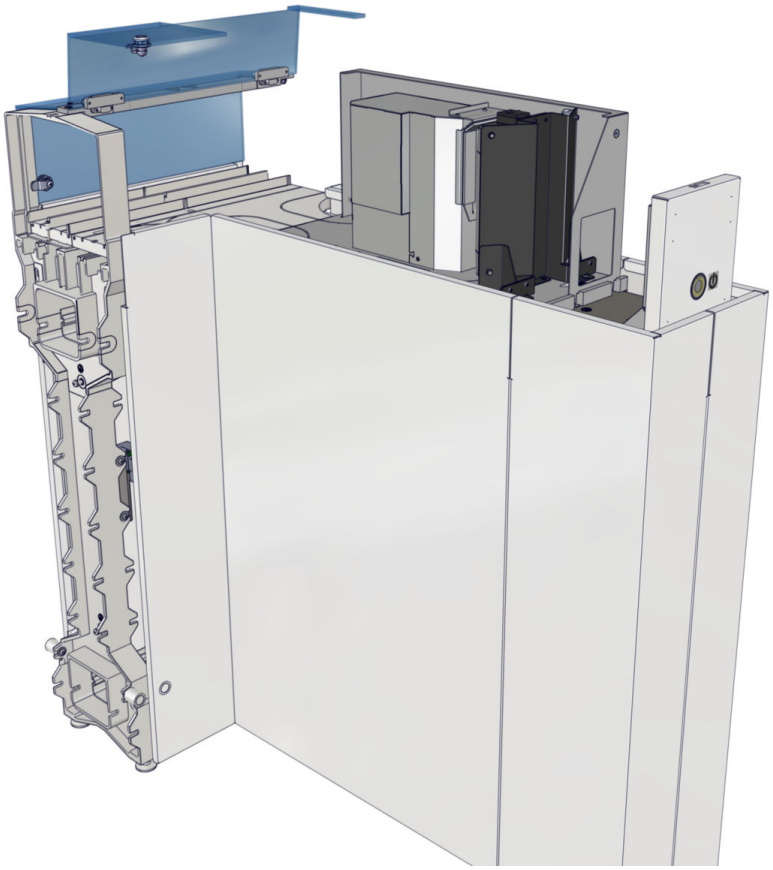

4. To close the TAC inner cover, place the TAC inner cover back onto the TAC on Track.
5. Insert and tighten the screws [1].

Related information...

Operating instructions, page 25
Clean the lane elements, page 46

Power on the TAC on Track

Prerequisite

- The TAC on Track is connected to the power supply.
- The On/Off push button is illuminated steady yellow.

Required module status Off

Perform this procedure to power on the TAC on Track.

1. Briefly press the On/Off push button [1].
2. Wait for approximately 1 minute for the module to be ready for operation.

Figure 14: On/Off push button

The On/Off push button [1] is illuminated steady green.

Related information...

Operating instructions, page 25
Clean the lane elements, page 46

Power off the TAC on Track

Prerequisite	The On/Off push button is illuminated steady green.
Required module status	On

Perform this procedure to power off the TAC on Track.

1. Briefly press the On/Off push button [1].
2. Wait for the module to power off.

Figure 15: On/Off push button

The On/Off push button [1] is illuminated steady yellow.

Related information...

Operating instructions, page 25

NOTES

Introduction

For optimal operator safety and accurate test results, comply with operational requirements, precautions, and limitations. Operators must be trained before they are allowed to operate the system. Failure to comply can affect system performance, and may cause damage to the system or may adversely affect test results.

For more information regarding hazards, refer to the GLP systems Track Operations Manual.

Related information...

General safety information, page 7

NOTES

Introduction

To minimize the potential for harm to personnel and damage to the laboratory environment, comply with the hazard and safety information.

This section contains supplemental information. Do not use the supplemental information to supersede workplace safety requirements. Review any significant differences between the supplemental information and the workplace safety requirements with management or a workplace safety representative.

For more information regarding hazards, refer to the GLP systems Track Operations Manual.

Related information...

Safety icons, page 40

General safety information, page 7

Safety icons

Follow all safety information in this manual. The laboratory staff may perform procedures that are included in this manual. Procedures not included in this manual may only be performed by an Abbott Laboratories representative or an authorized service representative. For example, if sample matter flows below an active or a passive lane element, service intervention is required.

NOTE: The safety instructions provided in the GLP systems Track Operations Manual must be observed.

CAUTION: Radio-frequency identification (RFID) devices. The operator should not change or modify RFID devices without approval by the party responsible for compliance. This action could void the operator's authority to operate the equipment.

CAUTION: Radio frequency exposure. The operator should be at least 20 cm from all RFID devices.

CAUTION: To prevent operator injury, the module status must be transitioned to Offline before the module interior is accessed.

CAUTION: Risk of infection due to skin contact. The operator may be exposed to health hazards, including death or infections, due to skin contact with infectious sample matter. Wear personal protective equipment while operating the laboratory automation system.

Table 3: Safety icons and descriptions

Icon	Description
	CAUTION: Biological RISKS Identifies an activity or an area where the operator may be exposed to potentially infectious material.
	CAUTION When used in this manual, this icon is accompanied by a description of the hazard and a related-information reference to safety content in this section. Examples include the following condition: **CAUTION: Moving Parts** Identifies an activity or an area where the operator may be exposed to moving parts.
	CAUTION: Protective conductor terminal Identifies an area where a terminal is connected to an external conductor or the terminal of a ground electrode.
	Observe operations manual Indicates that the operations manual must be read.

Icon	Description
	WEEE: Waste Electrical and Electronic Equipment Indicates that the item needs to be disposed of in a separate waste collection for electrical and electronic equipment and must not be disposed of in the general waste or trash.

Related information...

Hazards, page 39

NOTES

Introduction

The appropriate service, maintenance, and diagnostics of the system are some of the most important aspects of a complete quality assurance program. A thorough service, maintenance, and diagnostic program:

- Minimizes downtime.
- Maintains records for inspection and accreditation.
- Maintains system performance to provide optimal test results.

NOTE: Only approved customer-replaceable components are permitted to be used.

Related information...

Cleaning and maintenance checks, page 44

Cleaning, page 45

Cleaning and maintenance checks

Dust can cause system malfunctions. The following checks are required daily on the TAC on Track to maintain optimal system performance.

Check	Activity	Interval
Inspect the module for dust.	Carefully remove any dust as needed. See the following procedures: • *Clean the track hood*, page 45 • *Clean the TAC outer cover*, page 46 • *Clean the lane elements*, page 46	Daily
Verify that there are no observed problems.	Resolve any observed problems as needed. See *TAC on Track observed problems*, page 51.	Daily
Verify that the LED lamps are on.	Observe the TAC outer cover opening to determine if LED lamps are on.	Daily
Verify that no foreign objects are present on the track.	Remove any foreign objects.	Daily
Verify that the track hood, TAC outer cover, and TAC inner cover are closed and locked.	Close the track hood, TAC outer cover, and TAC inner cover as needed. See the following procedures: • *Open and close the track hood*, page 26 • *Open and close the TAC outer cover*, page 28 • *Open and close the TAC inner cover*, page 30	Daily

Related information...

Service, maintenance, and diagnostics, page 43

Cleaning

Some system components may need to be cleaned because of normal use from daily system operations or because of spills.

IMPORTANT: Incorrect cleaning procedures may cause sample contamination. Inappropriate cleaning agents may cause damage to the TAC on Track. Only allow trained personnel to clean the TAC on Track. Only use the recommended cleaning agents.

CAUTION: Wear personal protective equipment while operating the laboratory automation system.

CAUTION: Biological RISKS. This activity or area may expose the operator to potentially infectious material.

NOTE: Ensure that all samples have completed processing on the module to prevent contamination of samples.

Related information...

Service, maintenance, and diagnostics, page 43
As-needed cleaning procedures, page 45

As-needed cleaning procedures

As-needed cleaning procedures are required on the TAC on Track.

CAUTION: Risk of contamination and injury. During operation of the laboratory automation system (LAS), sample tubes and components may be damaged due to failure to comply with safe-use instructions. Spilled sample matter may cause infections due to skin contact.

- Wear personal protective equipment while operating the LAS. Avoid direct contact with the sample matter.
- Follow all hygiene regulations applicable to laboratory work.
- Only allow trained personnel to operate the LAS.

Related information...

Cleaning, page 45
Clean the track hood, page 45
Clean the TAC outer cover, page 46
Clean the lane elements, page 46

Clean the track hood

Required materials

- Antistatic plastic cleaner

- Lint-free cloth

Required module status On or Off

Perform this as-needed procedure to clean the track hood.

1. Ensure that the track hood is closed and locked before the track hood is cleaned.
2. Dampen a lint-free cloth with an antistatic plastic cleaner.
3. Wipe the entire surface area of the track hood.
4. Let the track hood air-dry to allow an antistatic film to form.

Related information...

As-needed cleaning procedures, page 45

Clean the TAC outer cover

Required materials

- Laboratory-grade surface disinfectant
- Lint-free cloth

Required module status On or Off

Perform this as-needed procedure to clean the TAC outer cover.

1. Dampen a lint-free cloth with a surface disinfectant.
2. Carefully wipe the TAC outer cover to remove any dust.

Related information...

As-needed cleaning procedures, page 45

Clean the lane elements

Required materials

- Handheld vacuum cleaner (recommended)
- Laboratory-grade surface disinfectant
- Lint-free cloth

Required module status Off

Perform this as-needed procedure to clean the lane elements.

CAUTION: The mirrors must not be touched or cleaned.

CAUTION: The LED lamps must not be touched or cleaned.

CAUTION: Warm or hot LED lamps. The LED lamps may be warm or hot.

1. Open the track hood.
2. Open and remove the TAC outer cover.
3. Open and remove the TAC inner cover.
4. Remove dust from the lane elements with the handheld vacuum cleaner.
5. Dampen a lint-free cloth with a surface disinfectant.
6. Carefully wipe the lane elements to remove any remaining dust.
7. Close the TAC inner cover.
8. Close the TAC outer cover.
9. Close the track hood.
10. Power on the TAC on Track.

Related information...

As-needed cleaning procedures, page 45
Open and close the track hood, page 26
Open and close the TAC outer cover, page 28
Open and close the TAC inner cover, page 30
Power on the TAC on Track, page 33

NOTES

Introduction

Problems with the TAC on Track are characterized by symptoms. Troubleshooting tools, references, and suggested techniques help to trace the symptom to one or more root causes.

After determining the root cause, perform the corrective actions to resolve the problem.

Before troubleshooting is performed for system errors, the module status must be Off.

The laboratory staff may perform procedures that are included in this manual. Procedures not included in this manual may only be performed only by an Abbott Laboratories representative or an authorized service representative.

CAUTION: Risk of infection due to skin contact. The operator may be exposed to health hazards, including death or infections, due to skin contact with infectious sample matter. Wear personal protective equipment while operating the laboratory automation system.

CAUTION: To prevent operator injury, the module must be transitioned to Off before the module interior is accessed.

CAUTION: Do not remove samples from a CAR or the track. If samples are removed from the track, they must be deleted from the Track Sample Manager before they are placed back in the Input/Output Module for appropriate routing.

Related information...

Message codes, page 50

TAC on Track observed problems, page 51

Message codes

Message codes are displayed on the Track Sample Manager user interface when TAC on Track errors occur. Message codes provide information about conditions or errors of system operation.

If a message code cannot be resolved, contact an Abbott Laboratories representative or an authorized service representative.

Refer to the GLP systems Track Operations Manual for additional sample errors related to the TAC.

NOTE: Corrective actions may involve hazardous activity. Use caution to minimize operator exposure and to prevent personal injury or system damage.

Related information...

Troubleshooting, page 49
27101, page 50
27102, page 50
27103, page 50

Message code: 27101

NFS not mounted.

Related information...

Message codes, page 50

Message code: 27102

No heartbeat from AccessPoint.

Related information...

Message codes, page 50

Message code: 27103

Invalid configuration data.

Related information...

Message codes, page 50

TAC on Track observed problems

Observed problems provide information about problems that may occur on the system and provide corrective actions that help to resolve the problems.

If the corrective actions for an observed problem do not resolve the problem, contact the local representative or find country-specific contact information at corelaboratory.abbott.

CAUTION: Risk of infection due to skin contact. The operator may be exposed to health hazards, including death or infections, due to skin contact with infectious sample matter. Wear personal protective equipment while operating the laboratory automation system.

Related information...

Troubleshooting, page 49
LED lamps are not on, page 51
Samples do not move into the TAC on Track, page 51
Power to the TAC on Track is interrupted, page 52
CAR is stuck in the TAC, page 52
Tube is not recognized, page 53

LED lamps are not on

Probable cause	Corrective action
Lamps are not working.	1. *Power off the TAC on Track*, page 35. 2. *Power on the TAC on Track*, page 33. 3. Contact an Abbott Laboratories representative or an authorized service representative if necessary.

Related information...

TAC on Track observed problems, page 51

Samples do not move into the TAC on Track

Probable cause	Corrective action
The TAC on Track is powered off.	1. *Power on the TAC on Track*, page 33. 2. Contact an Abbott Laboratories representative or an authorized service representative.
Lane elements are dusty.	*Clean the lane elements*, page 46.
A CAR is stuck in the TAC.	See *CAR is stuck in the TAC*, page 52.
Cross switch is not working.	Contact an Abbott Laboratories representative or an authorized service representative.

Probable cause	Corrective action
The On/Off push button is not working.	Contact an Abbott Laboratories representative or an authorized service representative.
The system configuration in the Track Sample Manager is incorrect.	Contact an Abbott Laboratories representative or an authorized service representative.

Related information...

TAC on Track observed problems, page 51

Power to the TAC on Track is interrupted

Probable cause	Corrective action
The power source to the TAC on Track is interrupted.	Contact an Abbott Laboratories representative or an authorized service representative.

Related information...

TAC on Track observed problems, page 51

CAR is stuck in the TAC

Probable cause	Corrective action
• A collision occurred between two CARs. • CAR is defective.	1. *Power off the TAC on Track*, page 35. 2. Open the track hood. Perform *Open and close the track hood*, page 26. 3. Open and remove the TAC outer cover. Perform *Open and close the TAC outer cover*, page 28. 4. Open and remove the TAC inner cover. Perform *Open and close the TAC inner cover*, page 30. 5. Remove the CAR with a sample from the TAC on Track. 6. Remove the sample from the CAR. 7. On the Track Sample Manager (TSM) user interface, remove the sample from the TSM database. For more information on removing samples from TSM, refer to the GLP systems Track Operations Manual. 8. Load the sample into the appropriate input area. 9. Inspect the CAR for damage. 10. Repair or replace the damaged CAR if necessary. 11. Close the TAC inner cover. Perform *Open and close the TAC inner cover*, page 30.

Probable cause	Corrective action
	12. Close the TAC outer cover. Perform *Open and close the TAC outer cover*, page 28. 13. Close the track hood. Perform *Open and close the track hood*, page 26. 14. *Power on the TAC on Track*, page 33.
Lane elements are dusty.	1. *Power off the TAC on Track*, page 35. 2. Open the track hood. Perform *Open and close the track hood*, page 26. 3. Open and remove the TAC outer cover. Perform *Open and close the TAC outer cover*, page 28. 4. Open and remove the TAC inner cover. Perform *Open and close the TAC inner cover*, page 30. 5. Remove the CAR with a sample from the TAC on Track. 6. Remove the sample from the CAR. 7. On the Track Sample Manager (TSM) user interface, remove the sample from the TSM database. For more information on removing samples from TSM, refer to the GLP systems Track Operations Manual. 8. Load the sample into the appropriate input area. 9. Inspect the CAR for damage. 10. Repair or replace the damaged CAR if necessary. 11. Clean the lane elements. Perform *Clean the lane elements*, page 46.

Related information...

TAC on Track observed problems, page 51

Tube is not recognized

Probable cause	Corrective action
• An unknown sample tube type is used. • The LED lamps are not on. • The LED lamps are defective. • The camera is defective.	1. Verify that sample tube type is configured. 2. *Power off the TAC on Track*, page 35. 3. *Power on the TAC on Track*, page 33. 4. Contact an Abbott Laboratories representative or an authorized service representative if necessary.

Related information...

TAC on Track observed problems, page 51

Revision history

Document control number	Revision date	Content revised
80004208-101	2023-06-21	Original release

NOTES

Index

A

as-needed cleaning procedures
  clean the lane elements, 46
  clean the TAC outer cover, 46
  clean the track hood, 45

C

cleaning
  description of, 45
  lane elements, 46
  TAC outer cover, 46
  track hood, 45
closing
  track hoods, 26

G

general safety information
  overview, 7

H

hazards
  overview, 39

I

installation procedures and special requirements
  overview, 15

M

message codes
  description of, 50

O

observed problems
  description of, 51
opening
  track hoods, 26

P

performance characteristics and specifications
  overview, 21
powering off
  TAC on Track, 35
powering on
  TAC on Track, 33
proprietary statement
  description of, 8

R

read me first
  overview, 5

S

sample processing specifications
  description of, 22
statuses
  descriptions of module statuses, 13

T

TAC on Track
  description of, 10
  illustration of, 10
  powering off, 35
  powering on, 33
track hoods
  closing, 26
  opening, 26

U

use or function
  description of, 9

Abbott