ETHICON

Echelon™ 3000 Stapler

en ECHELON™ 3000 Stapler

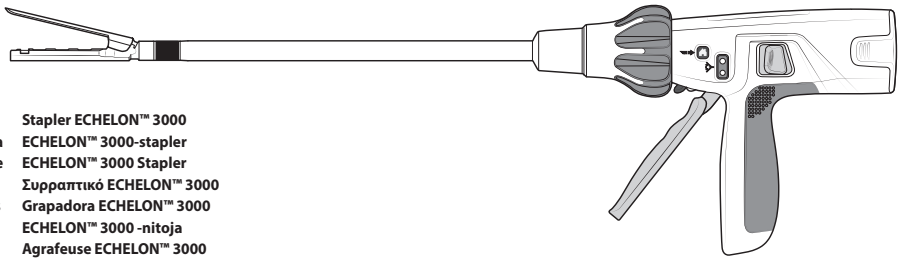

cs Stapler ECHELON™ 3000
da ECHELON™ 3000-stapler
de ECHELON™ 3000 Stapler
el Συρραπτικό ECHELON™ 3000
es Grapadora ECHELON™ 3000
fi ECHELON™ 3000 -nitoja
fr Agrafeuse ECHELON™ 3000
hu ECHELON™ 3000 kapcsozóműszer
it Suturatrice ECHELON™ 3000
nl ECHELON™ 3000 Stapler
pl Zszywacz ECHELON™ 3000
pt Agrafador ECHELON™ 3000
sv ECHELON™ 3000 stapler
tr ECHELON™ 3000 Stapler
zh ECHELON™ 3000 吻合器
bg, et, hr, id, lt, lv, mk, no, ro, ru, sk, sl, sr, vi: www.e-ifu.com

---

Please read all information carefully.

Failure to properly follow the instructions may lead to serious surgical consequences, such as bleeding, leakage or disruption.

Important: This package insert is designed to provide instructions for use of the ECHELON™ 3000 45mm and 60mm Staplers. It is not a reference to surgical techniques.

ETHICON™

PART OF THE Johnson & Johnson FAMILY OF COMPANIES

Radio Frequency Communication Information

This device contains radio frequency communication hardware. The intended use of the radio frequency communication hardware is to perform service operations on the device.

Federal Communication Commission (FCC) Statements

This device complies with part 15 of the FCC Rules. Operation is subject to the following two conditions: (1) This device may not cause harmful interference, and (2) this device must accept any interference received, including interference that may cause undesired operation.

Changes or modifications not expressly approved by the party responsible for compliance could void the user's authority to operate the equipment.

This equipment has been tested and found to comply with the limits for a Class A digital device, pursuant to part 15 of the FCC Rules. These limits are designed to provide reasonable protection against harmful interference when the equipment is operated in a commercial environment. This equipment generates, uses, and can radiate radio frequency energy and, if not installed and used in accordance with the instruction manual, may cause harmful interference to radio communications. Operation of this equipment in a residential area is likely to cause harmful interference in which case the user will be required to correct the interference at his own expense.

Industry Canada Statement

This device contains licence-exempt transmitter(s)/receiver(s) that comply with Innovation, Science and Economic Development Canada's licence-exempt RSS(s). Operation is subject to the following two conditions:

(1) This device may not cause interference.

(2) This device must accept any interference, including interference that may cause undesired operation of the device.

L'émetteur/récepteur exempt de licence contenu dans le présent appareil est conforme aux CNR d'Innovation, Sciences et Développement économique Canada applicables aux appareils radio exempts de licence. L'exploitation est autorisée aux deux conditions suivantes:

1) L'appareil ne doit pas produire de brouillage;

2) L'appareil doit accepter tout brouillage radioélectrique subi, même si le brouillage est susceptible d'en compromettre le fonctionnement.

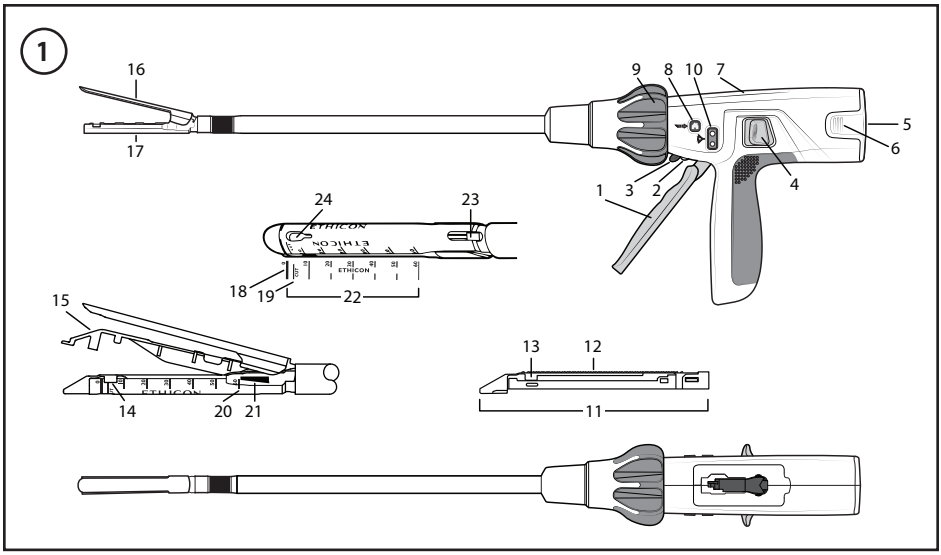
1
16
17
9
8
10
7
5
6
4
1
3
2
24
23
ETHICON
18
19
22
15
14
20
21
13
12
11

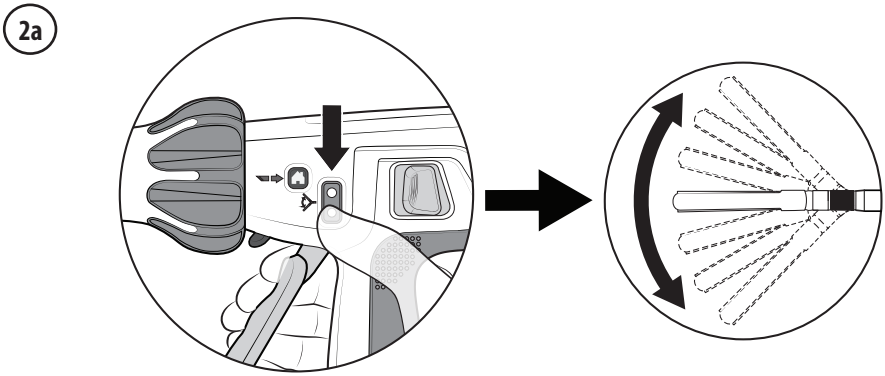
2a

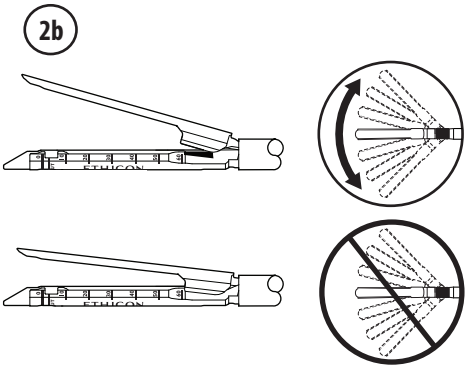
2b

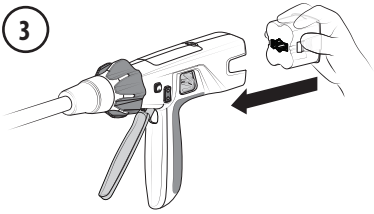
3

4

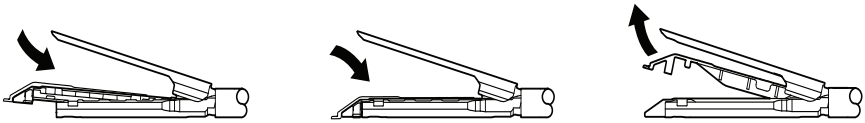

5

6

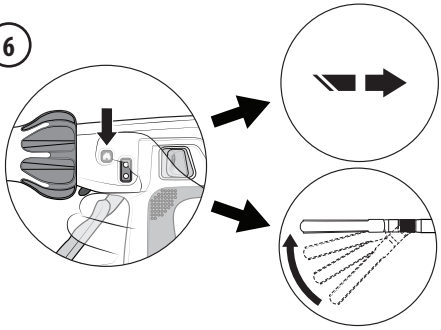
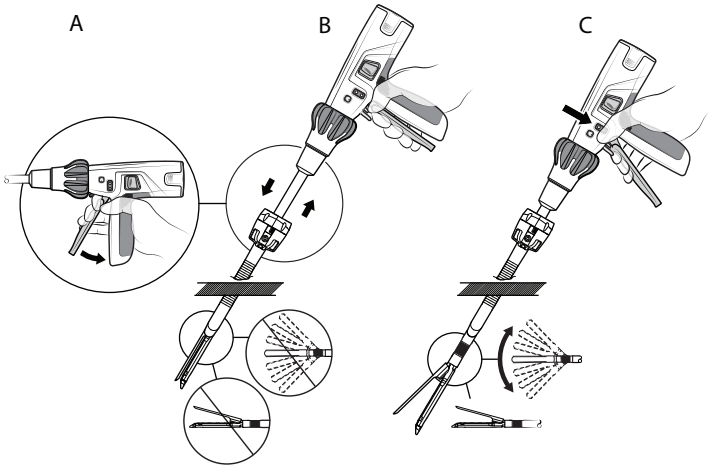
7