# TEST REPORT

| | |
|---|---|
| **Report No.....:** | **KS2111S3683E** |
| **FCC ID.....:** | 2A37L-PROS |
| **Applicant.....:** | **Volt Technology Inc** |
| Address.....: | 55 Rue Dagobert,Candiac J5R 6E8 Canada |
| Manufacturer.....: | Volt Technology Inc |
| Address.....: | 55 Rue Dagobert,Candiac J5R 6E8 Canada |
| **Product Name.....:** | Volt Caddy - Remote Electrical Golf Cart |
| Model/Type reference.....: | PRO-S |
| **Standard.....:** | **FCC CFR Title 47 Part 15 Subpart C Section 15.249** |
| Date of Receipt.....: | December 01,2021 |
| Date of Test Date.....: | December 01,2021 ~September 16,2022 |
| Date of issue.....: | September 16,2022 |
| **Test result.....:** | **Pass** |

| | | |
|---|---|---|
| Prepared by:<br>( Printed name+ signature) | Pai Zheng | Pai Zheng |
| Approved by:<br>( Printed name + Signature ) | Sky Dong | Sky dong |

| | |
|---|---|
| **Testing Laboratory Name.....:** | **KSIGN(Guangdong) Testing Co., Ltd.** |
| Address.....: | West Side of 1/F., Building C, Zone A, Fuyuan New Factory, Jiujiu Industrial Park, Minzhu,Shatou, Shajing, Bao'an District, Shenzhen, Guangdong, China |

This test report may be duplicated completely for legal use with the approval of the applicant. It should not be reproduced except in full, without the written approval of our laboratory. The client should not use it to claim product endorsement by KSIGN. The test results in the report only apply to the tested sample. The test report shall be invalid without all the signatures of testing engineers, reviewer and approver. Any objections must be raised to KSIGN within 15 days since the date when the report is received. It will not be taken into consideration beyond this limit. The test report merely correspond to the test sample.


Add：Building 5, No. 316, Jianghong South Road Binjiang District, Hangzhou 310052, China
Tel：+(86) 0571-8836 6861 Fax: +(86) 0571-8836 6821 E-mail：server@ksign.cn Web: www.ksign.cn

## TABLE OF CONTENTS

Page

**1. TEST SUMMARY** ..... **3**

1.1. TEST STANDARDS ..... 3
1.2. REPORT VERSION ..... 3
1.3. TEST DESCRIPTION ..... 4
1.4. MEASUREMENT UNCERTAINTY ..... 5
1.5. TEST FACILITY ..... 6
1.6. ENVIRONMENTAL CONDITIONS ..... 6

**2. GENERAL INFORMATION** ..... **7**

2.1. GENERAL DESCRIPTION OF EUT ..... 7
2.2. TABLE OF CARRIER FREQUENCY ..... 8
2.3. DESCRIPTION OF TEST MODES ..... 8
2.4. MEASUREMENT INSTRUMENTS LIST ..... 9

**3. TEST ITEM AND RESULTS** ..... **10**

3.1. ANTENNA REQUIREMENT ..... 10
3.2. CONDUCTED EMISSION ..... 11
3.3. 20DB BANDWIDTH ..... 12
3.4. RADIATED SPURIOUS EMISSIONS ..... 15
3.5. BAND EDGE EMISSIONS(RADIATED) ..... 23

**4. EUT TEST PHOTOS** ..... **25**

**5. PHOTOGRAPHS OF EUT CONSTRUCTIONAL** ..... **27**


Add：Building 5, No. 316, Jianghong South Road Binjiang District, Hangzhou 310052, China
Tel：+(86) 0571-8836 6861 Fax: +(86) 0571-8836 6821 E-mail：server@ksign.cn Web: www.ksign.cn

# 1. TEST SUMMARY

## 1.1. Test Standards

The tests were performed according to following standards:

**FCC Rules Part 15.249:** Operation within the bands 902-928 MHz, 2400-2483.5 MHz, 5725-5875 MHz, and 24.0-24.25 GHz.

**ANSI C63.10-2020:** American National Standard for Testing Unlicensed Wireless Devices.

## 1.2. Report version

| Revised No. | Date of issue | Description |
|---|---|---|
| 01 | September 16,2022 | Original |
| | | |
| | | |
| | | |


Add：Building 5, No. 316, Jianghong South Road Binjiang District, Hangzhou 310052, China
Tel：+(86) 0571-8836 6861 Fax: +(86) 0571-8836 6821 E-mail：server@ksign.cn Web: www.ksign.cn

## 1.3. Test Description

| FCC Rules Part 15.249 | | | |
|---|---|---|---|
| Test Item | Section in CFR 47 | Result | Test Engineer |
| | FCC | | |
| Antenna requirement | 15.203 | Pass | Tom Chen |
| AC Power Line Conducted Emissions | 15.207 | N/A | N/A |
| 20dB Bandwidth | Section 15.215(c) | Pass | Tom Chen |
| Band edge Emissions | Section 15.249(d) | Pass | Tom Chen |
| Radiated Spurious Emissions | Section 15.205(a),Section 15.209(a), Section 15.249 | Pass | Tom Chen |

Note:

1. Pass: The EUT complies with the essential requirements in the standard

   Fail: The EUT does not comply with the essential requirements in the standard

All indications of Pass/Fail in this report are opinions expressed by KSIGN(Guangdong) Testing Co., Ltd. based on interpretations and/or observations of test results Measurement Uncertainties were not taken into account and are published for informational purposes only.

2. N/A: means this test item is not applicable for this device according to the technology characteristic of device.


Add：Building 5, No. 316, Jianghong South Road Binjiang District, Hangzhou 310052, China
Tel：+(86) 0571-8836 6861 Fax: +(86) 0571-8836 6821 E-mail：server@ksign.cn Web: www.ksign.cn

## 1.4. Measurement Uncertainty

The data and results referenced in this document are true and accurate. The reader is cautioned that there may be errors within the calibration limits of the equipment and facilities. The measurement uncertainty was calculated for all measurements listed in this test report acc. to TR-100028-01" Electromagnetic compatibility and Radio spectrum Matters (ERM);Uncertainties in the measurement of mobile radio equipment characteristics; Part 1" and TR-100028-02 "Electromagnetic compatibility and Radio spectrum Matters (ERM);Uncertainties in the measurement of mobile radio equipment characteristics; Part 2 " and is documented in the KSIGN(Guangdong) Testing Co., Ltd. system acc. to DIN EN ISO/IEC 17025. Furthermore, component and process variability of devices similar to that tested may result in additional deviation. The manufacturer has the sole responsibility of continued compliance of the device.

Below is the best measurement capability for KSIGN(Guangdong) Testing Co., Ltd.

| Test Items | Measurement Uncertainty | Notes |
|---|---|---|
| Transmitter power conducted | 0.42 dB | (1) |
| Transmitter power Radiated | 2.14 dB | (1) |
| Conducted spurious emissions 9kHz~40GHz | 1.60 dB | (1) |
| Radiated spurious emissions 9kHz~40GHz | 2.20 dB | (1) |
| Conducted Emissions 9kHz~30MHz | 3.20 dB | (1) |
| Radiated Emissions 30~1000MHz | 4.70 dB | (1) |
| Radiated Emissions 1~18GHz | 5.00 dB | (1) |
| Radiated Emissions 18~40GHz | 5.54 dB | (1) |
| Occupied Bandwidth | 2.80 dB | (1) |

**Note (1):** This uncertainty represents an expanded uncertainty expressed at approximately the 95% confidence level using a coverage factor of k=1.96.


Add：Building 5, No. 316, Jianghong South Road Binjiang District, Hangzhou 310052, China
Tel：+(86) 0571-8836 6861 Fax: +(86) 0571-8836 6821 E-mail：server@ksign.cn Web: www.ksign.cn

## 1.5. Test Facility

**Address of the report laboratory**

**KSIGN(Guangdong) Testing Co., Ltd.**

West Side of 1/F., Building C, Zone A, Fuyuan New Factory, Jiujiu Industrial Park, Minzhu,Shatou, Shajing, Bao'an District, Shenzhen, Guangdong, People's Republic of China

**Laboratory accreditation**

The test facility is recognized, certified, or accredited by the following organizations:

**CNAS-Lab Code: L13261**
KSIGN(Guangdong) Testing Co., Ltd. has been assessed and proved to be in Compliance with CNAS-CL01 Accreditation Criteria for Testing and Calibration Laboratories (identical to ISO/IEC17025: 2017 General Requirements) for the Competence of Testing and Calibration Laboratories.

**A2LA-Lab Cert. No.: 5457.01**
KSIGN(Guangdong) Testing Co., Ltd. EMC Laboratory has been accredited by A2LA for technical Competence in the field of electrical testing, and proved to be in compliance with ISO/IEC 17025:2017 General Requirements for the Competence of Testing and Calibration Laboratories and any additional program requirements in the identified field of testing.

**ISED#: 25693 CAB identifier.: CN0096**
KSIGN(Guangdong) Testing Co., Ltd. has been listed by Innovation, Science and Economic Development Canada to perform electromagnetic emission measurement.

**FCC-Registration No.: 294912 Designation Number: CN1328**
KSIGN(Guangdong) Testing Co., Ltd. EMC Laboratory has been listed on the US Federal Communications Commission list of test facilities recognized to perform electromagnetic emissions measurements.

## 1.6. Environmental conditions

During the measurement the environmental conditions were within the listed ranges:

| | |
|---|---|
| Temperature: | 15~35°C |
| Relative Humidity: | 30~60 % |
| Air Pressure: | 950~1050mba |


Add：Building 5, No. 316, Jianghong South Road Binjiang District, Hangzhou 310052, China
Tel：+(86) 0571-8836 6861 Fax: +(86) 0571-8836 6821 E-mail：server@ksign.cn Web: www.ksign.cn

# 2. GENERAL INFORMATION

## 2.1. General Description of EUT

| | |
|---|---|
| Product Name: | Volt Caddy - Remote Electrical Golf Cart |
| Model/Type reference: | PRO-S |
| Power supply(Battery): | DC 3.0V |
| Hardware version: | V3.1 |
| Software version: | V2.0.06 |
| **Specification** | |
| Modulation: | GFSK |
| Operation frequency: | 2419MHz-2472MHz |
| Channel number: | 11 |
| Antenna type: | Internal antenna |
| Antenna gain: | 0.34 dBi |
| Note:<br>1. For a more detailed features description, please refer to the manufacturer's specifications or the user's manual. | |


Add：Building 5, No. 316, Jianghong South Road Binjiang District, Hangzhou 310052, China
Tel：+(86) 0571-8836 6861 Fax: +(86) 0571-8836 6821 E-mail：server@ksign.cn Web: www.ksign.cn

## 2.2. Table of Carrier Frequency

| Frequency Band | Channel Number | Frequency | Channel Number | Frequency |
|---|---|---|---|---|
| 2400~2483.5MHZ | 1 | 2419MHz | 7 | 2452MHz |
| | 2 | 2424MHz | 8 | 2457MHz |
| | 3 | 2429MHz | 9 | 2462MHz |
| | 4 | 2435MHz | 10 | 2467MHz |
| | 5 | 2440MHz | 11 | 2472MHz |
| | 6 | 2445MHz | | |

## 2.3. Description of Test Modes

Operation Frequency List: The EUT has been tested under typical operating condition. The Applicant provides communication tools software to control the EUT for staying in continuous transmitting and receiving mode for testing.

Operation Frequency: 2419MHz/2445MHz/2472MHz

**Test mode**

| |
|---|
| For RF test items: |
| The engineering test program was provided and enabled to make EUT continuous transmit. |
| For Radiated spurious emissions test item: |
| The engineering test program was provided and enabled to make EUT continuous transmit. The EUT in each of three orthogonal axis emissions had been tested, but only the worst case (X axis) data recorded in the report. |


Add：Building 5, No. 316, Jianghong South Road Binjiang District, Hangzhou 310052, China
Tel：+(86) 0571-8836 6861 Fax: +(86) 0571-8836 6821 E-mail：server@ksign.cn Web: www.ksign.cn

## 2.4. Measurement Instruments List

| Tonscend JS0806-2 Test system | | | | | |
|---|---|---|---|---|---|
| **Item** | **Test Equipment** | **Manufacturer** | **Model No.** | **Serial No.** | **Cal. Until** |
| 1 | Spectrum Analyzer | R&S | FSV40-N | 101798 | 03/04/2023 |
| 2 | Vector Signal Generator | Agilent | N5182A | MY50142520 | 03/04/2023 |
| 3 | Analog Signal Generator | HP | 83752A | 3344A00337 | 03/04/2023 |
| 4 | Power Sensor | Agilent | E9304A | MY50390009 | 03/04/2023 |
| 5 | Power Sensor | Agilent | E9300A | MY41498315 | 03/04/2023 |
| 6 | Wideband Radio Communication Tester | R&S | CMW500 | 157282 | 03/04/2023 |
| 7 | Climate Chamber | Angul | AGNH80L | 1903042120 | 03/04/2023 |
| 8 | Dual Output DC Power Supply | Agilent | E3646A | MY40009992 | 03/04/2023 |
| 9 | RF Control Unit | Tonscend | JS0806-2 | / | 03/04/2023 |

| Transmitter spurious emissions & Receiver spurious emissions | | | | | |
|---|---|---|---|---|---|
| **Item** | **Test Equipment** | **Manufacturer** | **Model No.** | **Serial No.** | **Cal. Until** |
| 1 | EMI Test Receiver | R&S | ESR | 102525 | 03/04/2023 |
| 2 | High Pass Filter | Chengdu E-Microwave | OHF-3-18-S | 0E01901038 | 03/04/2023 |
| 3 | High Pass Filter | Chengdu E-Microwave | OHF-6.5-18-S | 0E01901039 | 03/04/2023 |
| 4 | Spectrum Analyzer | HP | 8593E | 3831U02087 | 03/04/2023 |
| 5 | Ultra-Broadband logarithmic period Antenna | Schwarzbeck | VULB 9163 | 01230 | 12/04/2023 |
| 6 | Loop Antenna | Beijin ZHINAN | ZN30900C | 18050 | 03/04/2023 |
| 7 | Spectrum Analyzer | R&S | FSV40-N | 101798 | 03/04/2023 |
| 8 | Horn Antenna | Schwarzbeck | BBHA 9120 D | 2023 | 03/29/2023 |
| 9 | Pre-Amplifier | Schwarzbeck | BBV 9745 | 9745#129 | 03/04/2023 |
| 10 | Pre-Amplifier | EMCI | EMC051835SE | 980662 | 03/04/2023 |
| 11 | Horn Antenna | Schwarzbeck | BBHA 9170 | 00943 | 03/04/2023 |

Note:
1)The Cal. Interval was one year.
2)The cable loss has calculated in test result which connection between each test instruments.


Add：Building 5, No. 316, Jianghong South Road Binjiang District, Hangzhou 310052, China
Tel：+(86) 0571-8836 6861 Fax: +(86) 0571-8836 6821 E-mail：server@ksign.cn Web: www.ksign.cn

# 3. TEST ITEM AND RESULTS

## 3.1. Antenna requirement

**Requirement**

**FCC CFR Title 47 Part 15 Subpart C Section 15.203:**

An intentional radiator shall be designed to ensure that no antenna other than that furnished by the responsible party shall be used with the device. The use of a permanently attached antenna or of an antenna that uses a unique coupling to the intentional radiator, the manufacturer may design the unit so that a broken antenna can be replaced by the user, but the use of a standard antenna jack or electrical connector is prohibited.

**FCC CFR Title 47 Part 15 Subpart C Section 15.247(c) (1)(i):**

(i) Systems operating in the 2400~2483.5 MHz band that is used exclusively for fixed. Point-to-point operations may employ transmitting antennas with directional gain greater than 6dBi provided the maximum conducted output power of the intentional radiator is reduced by 1 dB for every 3 dB that the directional gain of the antenna exceeds 6dBi.

**Test Result**

The directional gain of the antenna less than 6dBi, please refer to the EUT internal photographs antenna photo.

Note: The antenna is permanently fixed to the EUT.


Add：Building 5, No. 316, Jianghong South Road Binjiang District, Hangzhou 310052, China
Tel：+(86) 0571-8836 6861 Fax: +(86) 0571-8836 6821 E-mail：server@ksign.cn Web: www.ksign.cn

## 3.2. Conducted Emission

**Limit**

**Conducted Emission Test Limit**

| Frequency | Maximum RF Line Voltage (dBμV) | |
|---|---|---|
| | Quasi-peak Level | Average Level |
| 150kHz~500kHz | 66 ~ 56 * | 56 ~ 46 * |
| 500kHz~5MHz | 56 | 46 |
| 5MHz~30MHz | 60 | 50 |

Notes:
(1) *Decreasing linearly with logarithm of the frequency.
(2) The lower limit shall apply at the transition frequencies.
(3) The limit decrease in line with the logarithm of the frequency in the range of 0.15 to 0.50MHz.

**Test Configuration**

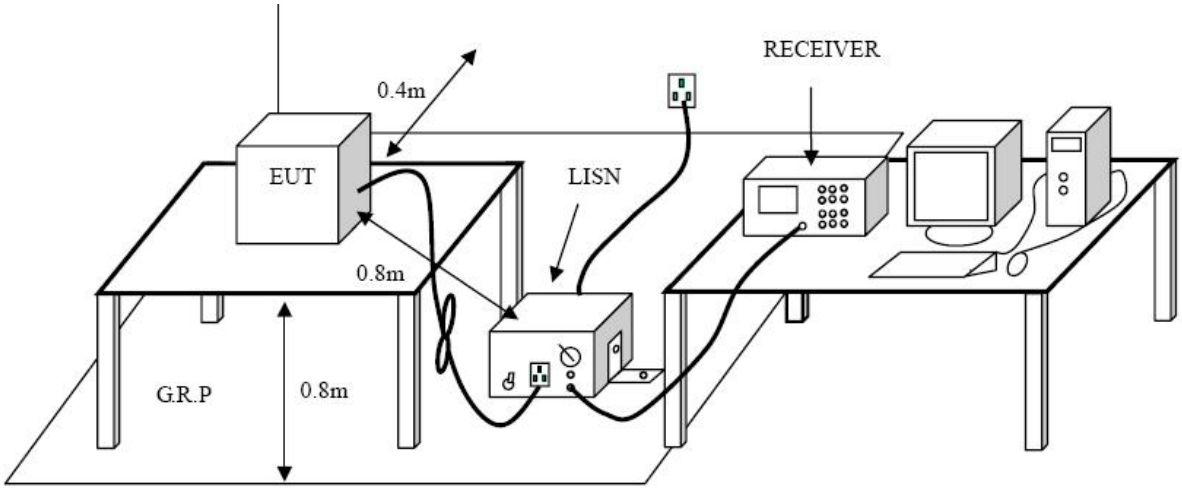


**Test Procedure**

1. The EUT was setup according to ANSI C63.10:2013 requirements.
2. The EUT was placed on a platform of nominal size, 1 m by 1.5 m, raised 80 cm above the conducting ground plane. The vertical conducting plane was located 40 cm to the rear of the EUT. All other surfaces of EUT were at least 80 cm from any other grounded conducting surface.
3. The EUT and simulators are connected to the main power through a line impedances stabilization network (LISN). The LISN provides a 50ohm /50uH coupling impedance for the measuring equipment.
   The peripheral devices are also connected to the main power through a LISN. (Please refer to the block diagram of the test setup and photographs)
4. Each current-carrying conductor of the EUT power cord, except the ground (safety) conductor, was individually connected through a LISN to the input power source.
5. The excess length of the power cord between the EUT and the LISN receptacle were folded back and forth at the center of the lead to form a bundle not exceeding 40 cm in length.
6. Conducted Emissions were investigated over the frequency range from 0.15MHz to 30MHz using a receiver bandwidth of 9 kHz.
7. During the above scans, the emissions were maximized by cable manipulation.

**Test Results**

N/A
The product is battery powered.


Add：Building 5, No. 316, Jianghong South Road Binjiang District, Hangzhou 310052, China
Tel：+(86) 0571-8836 6861 Fax: +(86) 0571-8836 6821 E-mail：server@ksign.cn Web: www.ksign.cn

## 3.3. 20dB Bandwidth

**Limit**

Operation frequency range 2400MHz~2483.5MHz.

**Test Configuration**

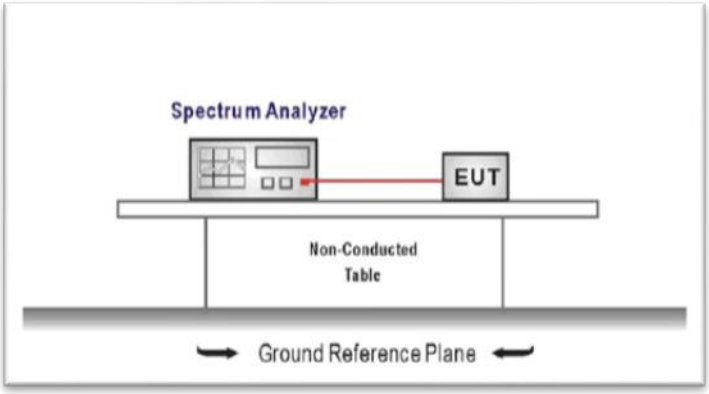


**Test Procedure**

1. The transmitter output was connected to the spectrum analyzer through an attenuator, the path loss was compensated to the results for each measurement.
2. Set to the maximum power setting and enable the EUT transmit continuously
3. Use the following spectrum analyzer settings:

   Span = approximately 2 to 3 times the 20 dB bandwidth, centered on a hopping channel

   RBW ≥ 1% of the 20 dB bandwidth, VBW ≥ RBW

   Sweep = auto, Detector function = peak, Trace = max hold
4. Measure and record the results in the test report.

**Test Mode**

Please refer to the clause 2.3..


Add：Building 5, No. 316, Jianghong South Road Binjiang District, Hangzhou 310052, China
Tel：+(86) 0571-8836 6861 Fax: +(86) 0571-8836 6821 E-mail：server@ksign.cn Web: www.ksign.cn

**Test Results**

| Test Mode: | GFSK | |
|---|---|---|
| **Channel frequency (MHz)** | **20dB Bandwidth [MHz]** | **Verdict** |
| 2419 | 6.577 | PASS |
| 2445 | 6.729 | PASS |
| 2472 | 6.838 | PASS |
| 2419MHz | | |

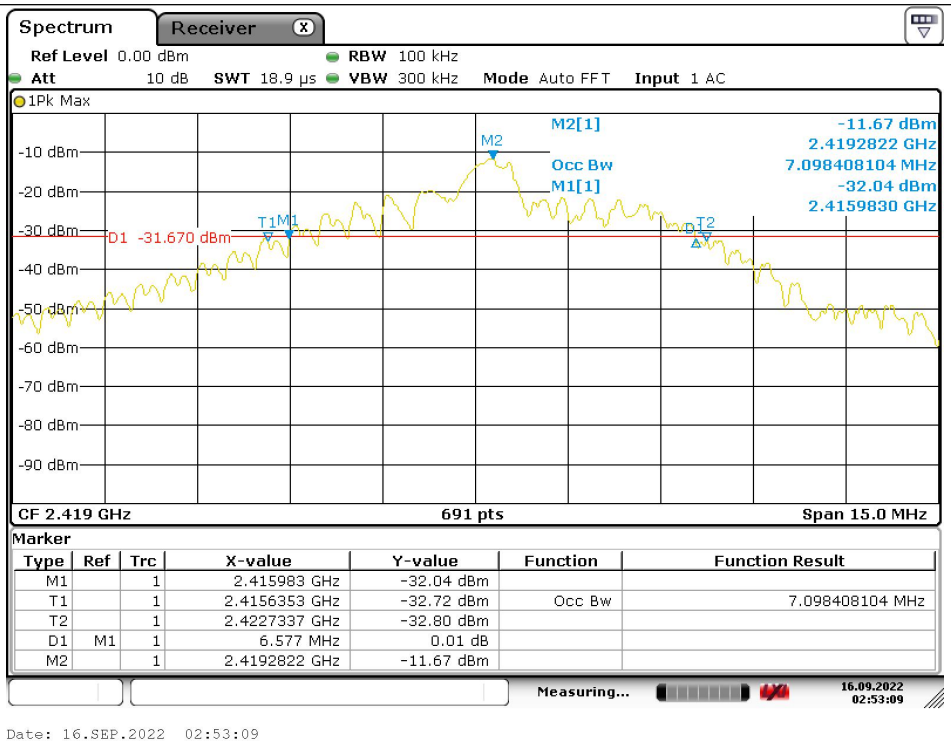



Add：Building 5, No. 316, Jianghong South Road Binjiang District, Hangzhou 310052, China
Tel：+(86) 0571-8836 6861 Fax: +(86) 0571-8836 6821 E-mail：server@ksign.cn Web: www.ksign.cn

2445MHz

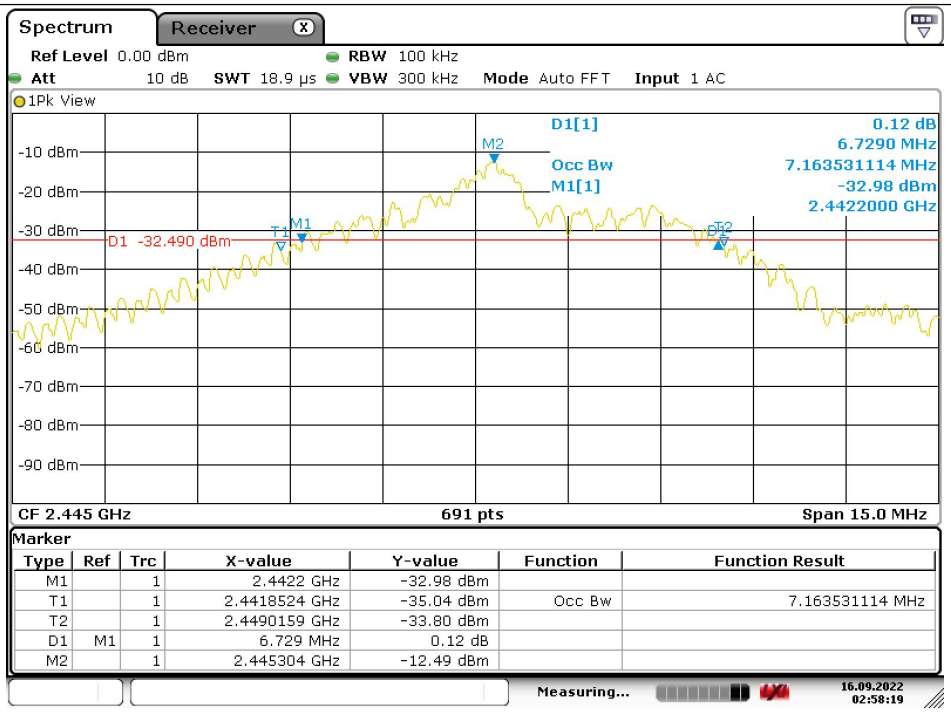


Date: 16.SEP.2022 02:58:19

2472MHz

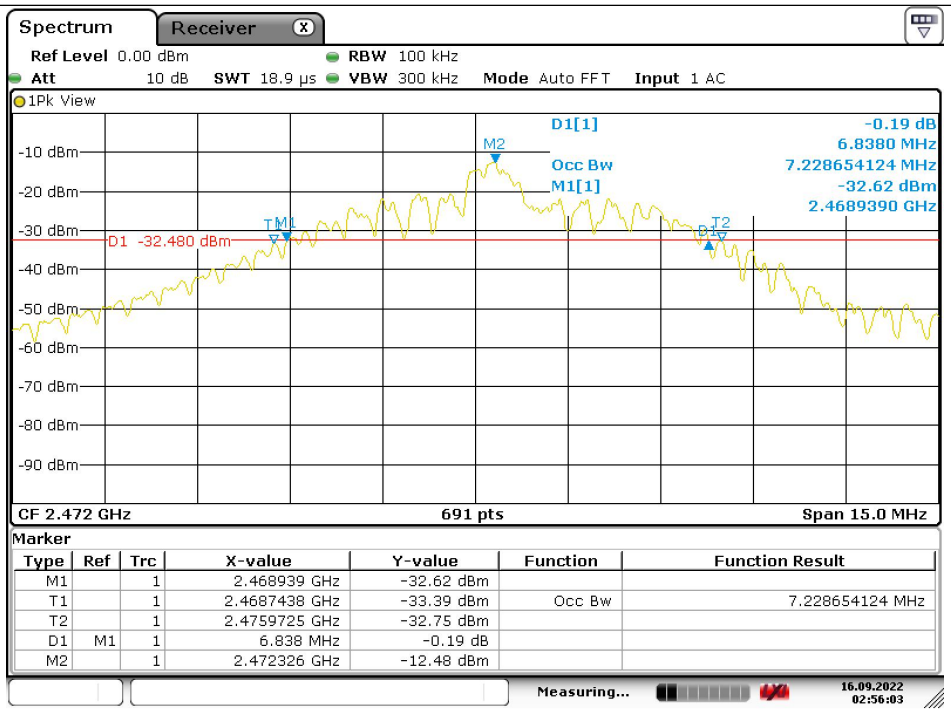


Date: 16.SEP.2022 02:56:04


Add：Building 5, No. 316, Jianghong South Road Binjiang District, Hangzhou 310052, China
Tel：+(86) 0571-8836 6861 Fax: +(86) 0571-8836 6821 E-mail：server@ksign.cn Web: www.ksign.cn

## 3.4. Radiated Spurious Emissions

**LIMIT**

**FCC CFR Title 47 Part 15 Subpart C Section 15.209(a) and 15.205(a)**

**Standard FCC15.249**

| Fundamental Frequency | Field Strength of Fundamental (millivolts/meter) | Field Strength of Harmonics (microvolts/meter) |
|---|---|---|
| 900-928MHz | 50 | 500 |
| 2400-2483.5MHz | 50 | 500 |
| 5725-5875MHz | 50 | 500 |
| 24.0-24.25GHz | 250 | 2500 |

**Standard FCC 15.209**

| Frequency (MHz) | Distance Meters | Field Strengths Limit | |
|---|---|---|---|
| | | μ V/m | dB(μV)/m |
| 0.009 ~ 0.490 | 300 | 2400/F(kHz) | --- |
| 0.490 ~ 1.705 | 30 | 24000/F(kHz) | --- |
| 1.705 ~ 30 | 30 | 30 | --- |
| 30 ~ 88 | 3 | 100 | 40.0 |
| 88 ~ 216 | 3 | 150 | 43.5 |
| 216 ~ 960 | 3 | 200 | 46.0 |
| 960 ~ 1000 | 3 | 500 | 54.0 |
| Above 1000 | 3 | Other:74.0dB(μV)/m(Peak) 54.0dB(μV)/m (Average) | |

Remark: (1) Emission level dB μ V = 20 log Emission level μ V/m
(2) The smaller limit shall apply at the cross point between two frequency bands.
(3) Distance is the distance in meters between the measuring instrument, antenna and the closest point of any part of the device or system.

FREQUENCY RANGE OF RADIATED MEASUREMENT

| Spectrum Parameter | Setting |
|---|---|
| Start ~Stop Frequency | 9KHz~150KHz/RB 200Hz for QP |
| Start ~Stop Frequency | 150KHz~30MHz/RB 9KHz for QP |
| Start ~Stop Frequency | 30MHz~1000MHz/RB 120KHz for QP |
| Start ~Stop Frequency | 1GHz~26.5GHz<br>RBW 1MHz/ VBW 1MHz for Peak,<br>RBW 1MHz/ VBW 10Hz for Average |

| Receiver Parameter | Setting |
|---|---|
| Start ~Stop Frequency | 9KHz~150KHz/RB 200Hz for QP |
| Start ~Stop Frequency | 150KHz~30MHz/RB 9KHz for QP |
| Start ~Stop Frequency | 30MHz~1000MHz/RB 120KHz for QP |


Add：Building 5, No. 316, Jianghong South Road Binjiang District, Hangzhou 310052, China
Tel：+(86) 0571-8836 6861 Fax: +(86) 0571-8836 6821 E-mail：server@ksign.cn Web: www.ksign.cn

**Test Configuration**

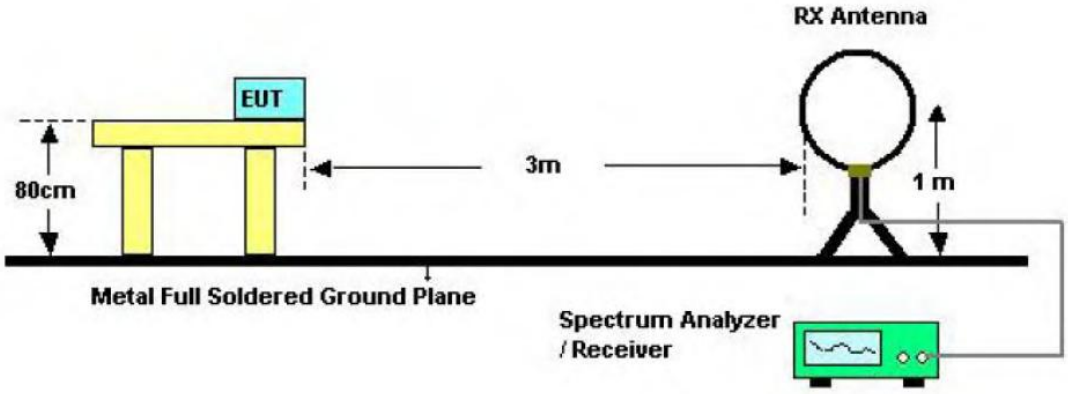


Below 30MHz Test Setup

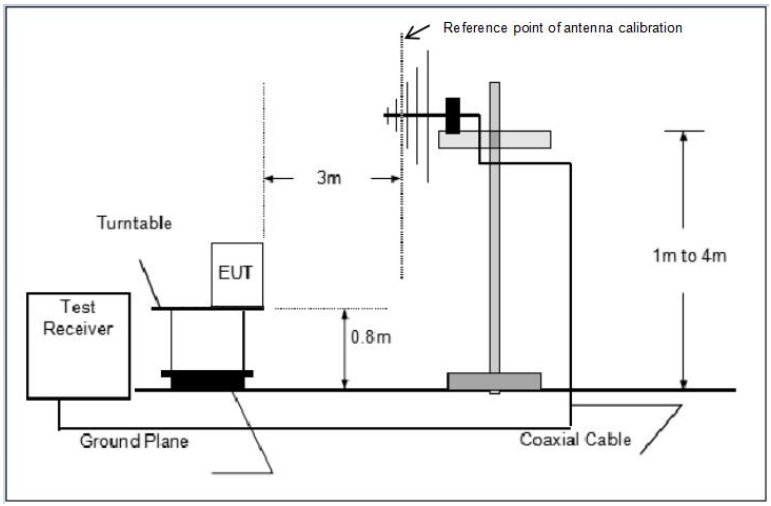


Below 1000MHz Test Setup

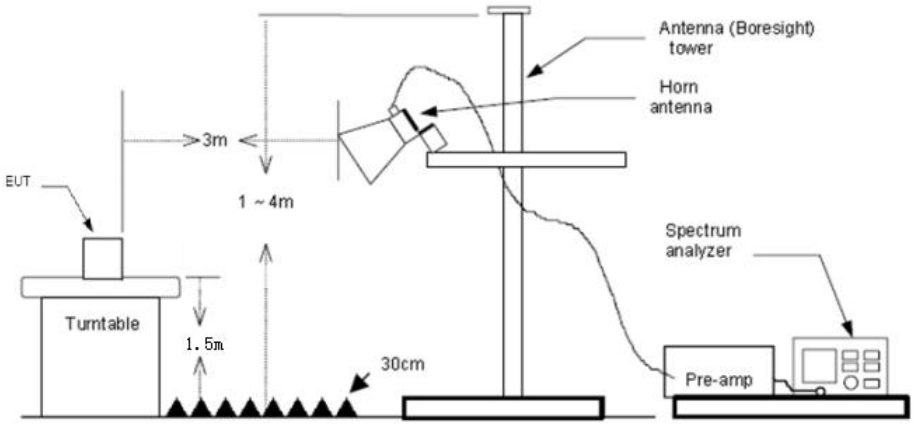


Above 1GHz Test Setup


Add：Building 5, No. 316, Jianghong South Road Binjiang District, Hangzhou 310052, China
Tel：+(86) 0571-8836 6861 Fax: +(86) 0571-8836 6821 E-mail：server@ksign.cn Web: www.ksign.cn

**Test Procedure**

1. The EUT was setup and tested according to ANSI C63.10:2013
2. The EUT is placed on a turn table which is 0.8 meter above ground for below 1 GHz, and 1.5 m for above 1 GHz. The turn table is rotated 360 degrees to determine the position of the maximum emission level.
3. The EUT was set 3 meters from the receiving antenna, which was mounted on the top of a variable height antenna tower.
4. For each suspected emission, the EUT was arranged to its worst case and then tune the Antenna tower (from 1 m to 4 m) and turntable (from 0 degree to 360 degrees) to find the maximum reading. A pre-amp and a high pass filter are used for the test in order to get better signal level to comply with the guidelines.
5. Set to the maximum power setting and enable the EUT transmit continuously.
6. Use the following spectrum analyzer settings
   (1) Span shall wide enough to fully capture the emission being measured;
   (2) Below 1 GHz:
   RBW=120 kHz, VBW=300 kHz, Sweep=auto, Detector function=peak, Trace=max hold;
   If the emission level of the EUT measured by the peak detector is 3 dB lower than the applicable limit, the peak emission level will be reported. Otherwise, the emission measurement will be repeated using the quasi-peak detector and reported.
   (3) From 1 GHz to 10$^{th}$ harmonic:
   RBW=1MHz, VBW=3MHz Peak detector for Peak value.
   RBW=1MHz, VBW=10Hz RMS detector for Average value.

**TEST MODE:**

Please refer to the clause 2.3

**TEST RESULTS**

☒ **Passed** ☐ **Not Applicable**

**9 KHz~30 MHz and 18GHz~25GHz**

From 9 KHz~30 MHz and 18GHz~25GHz: Conclusion: PASS

Note:

1) Final level = Reading level + Correct Factor
   Correct Factor=Antenna Factor + Cable Loss -Preamplifier Factor
2) The emission levels of other frequencies are very lower than the limit and not show in test report.
3) The amplitude of spurious emissions which are attenuated by more than 20dB below the permissible value has no need to be reported.
4) Pre-scan 2402MHz, 2437MHz and 2479MHz mode, and found the 2408MHz which it is worse case for 30MHz-1GHz , so only show the test data for worse case.
5) Pre-scan 2402MHz, 2437MHz and 2479MHz mode, and found the 2408MHz mode it is worse case for above 1GHz, so only show the test data for worse case.
6) 18GHz ~ 25GHz
   The EUT was pre-scanned the frequency band (18GHz~25GHz), found the radiated level(Background noise) lower than the limit, so don't show on the report. 3


Add：Building 5, No. 316, Jianghong South Road Binjiang District, Hangzhou 310052, China
Tel：+(86) 0571-8836 6861 Fax: +(86) 0571-8836 6821 E-mail：server@ksign.cn Web: www.ksign.cn

**Radiated field strength of the fundamental signal**

| Frequency (MHz) | Read Level (dBuV) | Correct Factor (dB/m) | Level (dBuV/m) | Limit Line (dBuV/m) | Over Limit (dBuV/m) | Polarization | Test value |
|---|---|---|---|---|---|---|---|
| 2419 | 102.19 | -10.88 | 91.31 | 114 | -22.69 | Horizontal | Peak |
| 2445 | 102.82 | -10.88 | 91.94 | 114 | -22.06 | Horizontal | Peak |
| 2472 | 104.43 | -10.88 | 93.55 | 114 | -20.45 | Horizontal | Peak |
| 2419 | 86.2 | -10.88 | 75.32 | 94 | -18.68 | Horizontal | AVG |
| 2445 | 88.46 | -10.88 | 77.58 | 94 | -16.42 | Horizontal | AVG |
| 2472 | 89.19 | -10.88 | 78.31 | 94 | -15.69 | Horizontal | AVG |

| Frequency (MHz) | Read Level (dBuV) | Correct Factor (dB/m) | Level (dBuV/m) | Limit Line (dBuV/m) | Over Limit (dBuV/m) | Polarization | Test value |
|---|---|---|---|---|---|---|---|
| 2419 | 103.81 | -10.88 | 92.93 | 114 | -21.07 | Vertical | Peak |
| 2445 | 103.37 | -10.88 | 92.49 | 114 | -21.51 | Vertical | Peak |
| 2472 | 106.28 | -10.88 | 95.4 | 114 | -18.6 | Vertical | Peak |
| 2419 | 85.82 | -10.88 | 74.94 | 94 | -19.06 | Vertical | AVG |
| 2445 | 83.89 | -10.88 | 73.01 | 94 | -20.99 | Vertical | AVG |
| 2472 | 82.14 | -10.88 | 71.26 | 94 | -22.74 | Vertical | AVG |

Note:
Correct Factor=Antenna Factor + Cable Loss -Preamplifier Factor

**RADIATED EMISSION BELOW 30MHZ**

No emission found between lowest internal used/generated frequencies to 30MHz.


Add：Building 5, No. 316, Jianghong South Road Binjiang District, Hangzhou 310052, China
Tel：+(86) 0571-8836 6861 Fax: +(86) 0571-8836 6821 E-mail：server@ksign.cn Web: www.ksign.cn

**30MHz-1GHz**

| | |
|---|---|
| **Test Voltage:** | DC 3.0V |
| **Ant. Pol.** | Horizontal |
| **Test Mode:** | TX 2419MHz |

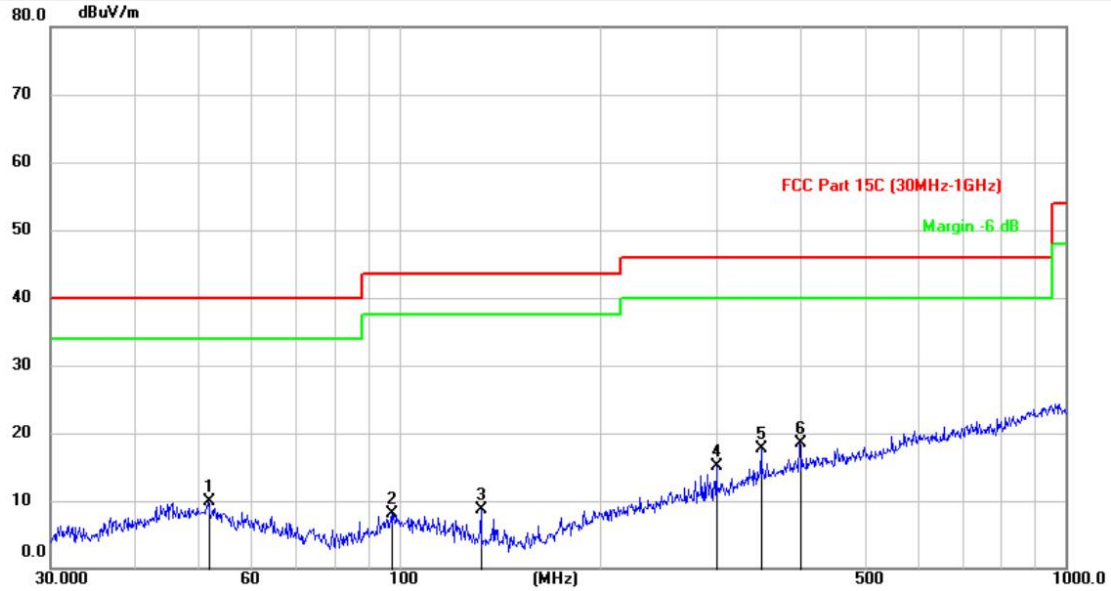


| No. | Mk. | Freq. | Reading Level | Correct Factor | Measure-ment | Limit | Over | |
|---|---|---|---|---|---|---|---|---|
| | | MHz | (dBuV) | (dB/m) | (dBuV/m) | (dBuV/m) | (dB) | Detector |
| 1 | | 51.8247 | 25.84 | -16.01 | 9.83 | 40.00 | -30.17 | QP |
| 2 | | 97.4901 | 26.10 | -18.04 | 8.06 | 43.50 | -35.44 | QP |
| 3 | | 132.6850 | 29.86 | -21.20 | 8.66 | 43.50 | -34.84 | QP |
| 4 | | 300.0514 | 29.85 | -14.66 | 15.19 | 46.00 | -30.81 | QP |
| 5 | | 349.9854 | 30.21 | -12.54 | 17.67 | 46.00 | -28.33 | QP |
| 6 | * | 400.0109 | 29.33 | -10.91 | 18.42 | 46.00 | -27.58 | QP |

**Emission Level= Read Level+ Correct Factor**


Add：Building 5, No. 316, Jianghong South Road Binjiang District, Hangzhou 310052, China
Tel：+(86) 0571-8836 6861 Fax: +(86) 0571-8836 6821 E-mail：server@ksign.cn Web: www.ksign.cn

| | |
|---|---|
| **Test Voltage:** | DC 3.0V |
| **Ant. Pol.** | Vertical |
| **Test Mode:** | TX 2419MHz |

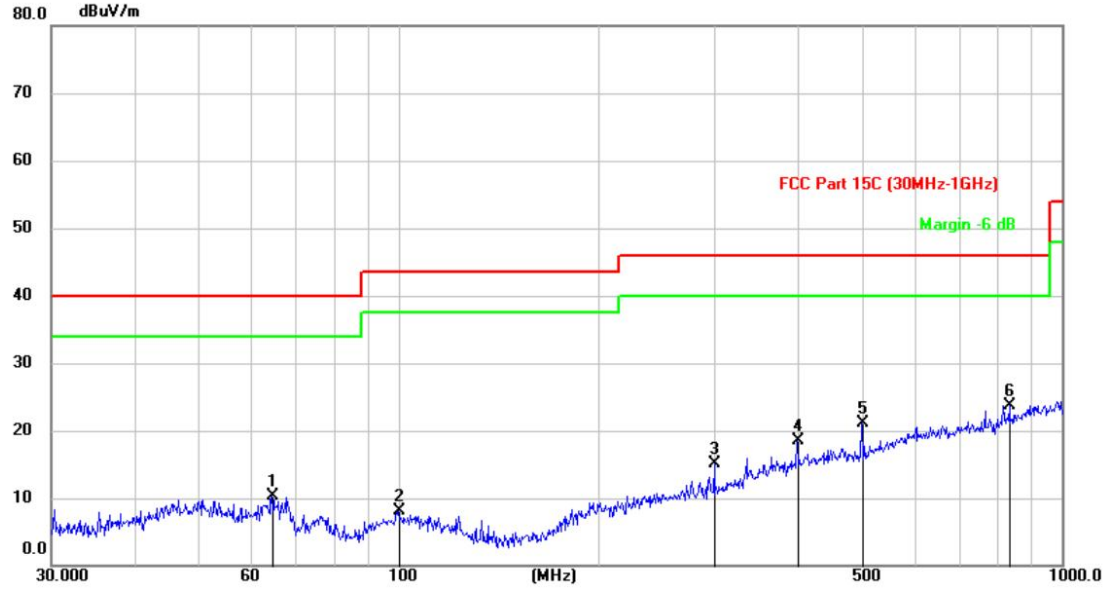


| No. | Mk. | Freq. | Reading Level | Correct Factor | Measure-ment | Limit | Over | |
|---|---|---|---|---|---|---|---|---|
| | | MHz | (dBuV) | (dB/m) | (dBuV/m) | (dBuV/m) | (dB) | Detector |
| 1 | | 64.5688 | 28.80 | -18.56 | 10.24 | 40.00 | -29.76 | QP |
| 2 | | 99.9829 | 25.79 | -17.64 | 8.15 | 43.50 | -35.35 | QP |
| 3 | | 300.0514 | 29.72 | -14.66 | 15.06 | 46.00 | -30.94 | QP |
| 4 | | 400.0109 | 29.33 | -10.91 | 18.42 | 46.00 | -27.58 | QP |
| 5 | | 500.1257 | 30.96 | -9.93 | 21.03 | 46.00 | -24.97 | QP |
| 6 | * | 833.3171 | 29.31 | -5.56 | 23.75 | 46.00 | -22.25 | QP |

**Emission Level= Read Level+ Correct Factor**


Add：Building 5, No. 316, Jianghong South Road Binjiang District, Hangzhou 310052, China
Tel：+(86) 0571-8836 6861 Fax: +(86) 0571-8836 6821 E-mail：server@ksign.cn Web: www.ksign.cn

**Above 1GHz**

| Frequency(MHz): | | 2419 | | Polarity: | | HORIZONTAL |
|---|---|---|---|---|---|---|
| Frequency (MHz) | Reading Level (dBuV/m) | Correc Factor (dB/m) | Measurement (dBuV/m) | Limit (dBuV/m) | Over (dB) | Detector |
| 4838.00 | 60.70 | -5.92 | 54.78 | 74 | 19.22 | PK |
| 4838.00 | 44.31 | -5.92 | 38.39 | 54 | 15.61 | AV |
| 7257.00 | 53.10 | -1.81 | 51.29 | 74 | 22.71 | PK |
| 725700 | 42.84 | -1.81 | 41.03 | 54 | 12.97 | AV |

| Frequency(MHz): | | 2419 | | Polarity: | | VERTICAL |
|---|---|---|---|---|---|---|
| Frequency (MHz) | Reading Level (dBuV/m) | Correc Factor (dB/m) | Measurement (dBuV/m) | Limit (dBuV/m) | Over (dB) | Detector |
| 4838.00 | 54.08 | -5.92 | 48.16 | 74 | 25.84 | PK |
| 4838.00 | 44.32 | -5.92 | 38.40 | 54 | 15.60 | AV |
| 7257.00 | 52.83 | -1.81 | 51.02 | 74 | 22.98 | PK |
| 7257.00 | 40.37 | -1.81 | 38.56 | 54 | 15.44 | AV |

| Frequency(MHz): | | 2445 | | Polarity: | | HORIZONTAL |
|---|---|---|---|---|---|---|
| Frequency (MHz) | Reading Level (dBuV/m) | Correc Factor (dB/m) | Measurement (dBuV/m) | Limit (dBuV/m) | Over (dB) | Detector |
| 4890.00 | 54.21 | -5.71 | 48.50 | 74 | 25.50 | PK |
| 4890.00 | 44.15 | -5.71 | 38.44 | 54 | 15.56 | AV |
| 7335.00 | 52.56 | -0.36 | 52.20 | 74 | 21.80 | PK |
| 7335.00 | 39.03 | -0.36 | 38.67 | 54 | 15.33 | AV |

| Frequency(MHz): | | 2445 | | Polarity: | | VERTICAL |
|---|---|---|---|---|---|---|
| Frequency (MHz) | Reading Level (dBuV/m) | Correc Factor (dB/m) | Measurement (dBuV/m) | Limit (dBuV/m) | Over (dB) | Detector |
| 4890.00 | 54.48 | -5.71 | 48.77 | 74 | 25.23 | PK |
| 4890.00 | 44.75 | -5.71 | 39.04 | 54 | 14.96 | AV |
| 7335.00 | 53.22 | -0.36 | 52.86 | 74 | 21.14 | PK |
| 7335.00 | 39.30 | -0.36 | 38.94 | 54 | 15.06 | AV |

| Frequency(MHz): | | 2472 | | Polarity: | | HORIZONTAL |
|---|---|---|---|---|---|---|
| Frequency (MHz) | Reading Level (dBuV/m) | Correc Factor (dB/m) | Measurement (dBuV/m) | Limit (dBuV/m) | Over (dB) | Detector |
| 4944.00 | 52.28 | -5.51 | 46.77 | 74 | 27.23 | PK |
| 4944.00 | 43.49 | -5.51 | 37.98 | 54 | 16.02 | AV |
| 7416.00 | 51.80 | 0.99 | 52.79 | 74 | 21.21 | PK |
| 7416.00 | 38.43 | 0.99 | 39.42 | 54 | 14.58 | AV |


Add：Building 5, No. 316, Jianghong South Road Binjiang District, Hangzhou 310052, China
Tel：+(86) 0571-8836 6861 Fax: +(86) 0571-8836 6821 E-mail：server@ksign.cn Web: www.ksign.cn

| Frequency(MHz): | | 2472 | | Polarity: | | VERTICAL |
|---|---|---|---|---|---|---|
| Frequency (MHz) | Reading Level (dBuV/m) | Correc Factor (dB/m) | Measurement (dBuV/m) | Limit (dBuV/m) | Over (dB) | Detector |
| 4944.00 | 53.24 | -5.51 | 47.73 | 74 | 26.27 | PK |
| 4944.00 | 43.29 | -5.51 | 37.78 | 54 | 16.22 | AV |
| 7416.00 | 52.02 | 0.99 | 53.01 | 74 | 20.99 | PK |
| 7416.00 | 39.55 | 0.99 | 40.54 | 54 | 13.46 | AV |

Note:
1.18GHz-26.5GHz is the background of the site, there is no radiated spurious.


Add：Building 5, No. 316, Jianghong South Road Binjiang District, Hangzhou 310052, China
Tel：+(86) 0571-8836 6861 Fax: +(86) 0571-8836 6821 E-mail：server@ksign.cn Web: www.ksign.cn

## 3.5. Band Edge Emissions(Radiated)

**Test Configuration**

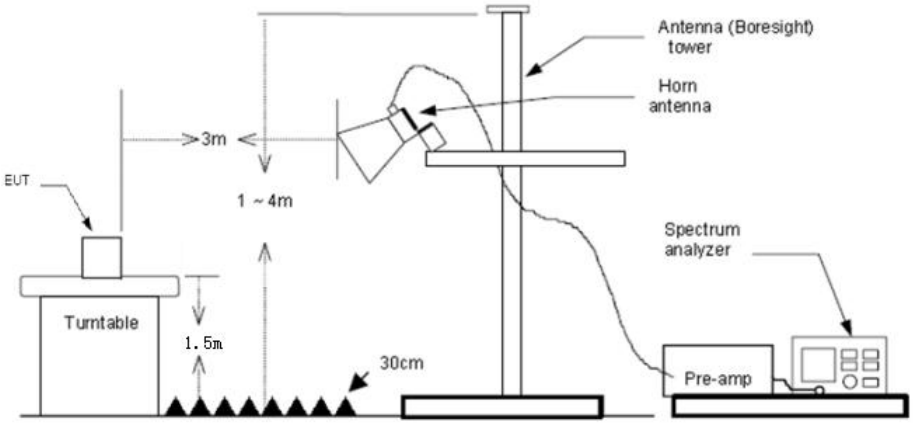


**Test Procedure**

1. The EUT was setup and tested according to ANSI C63.10:2013
2. The EUT is placed on a turn table which is 0.8 meter above ground for below 1 GHz, and 1.5 m for above 1 GHz. The turn table is rotated 360 degrees to determine the position of the maximum emission level.
3. The EUT was set 3 meters from the receiving antenna, which was mounted on the top of a variable height antenna tower.
4. For each suspected emission, the EUT was arranged to its worst case and then tune the Antenna tower (from 1 m to 4 m) and turntable (from 0 degree to 360 degrees) to find the maximum reading. A pre-amp and a high pass filter are used for the test in order to get better signal level to comply with the guidelines.
5. Set to the maximum power setting and enable the EUT transmit continuously.
6. Use the following spectrum analyzer settings

   (1) Span shall wide enough to fully capture the emission being measured;

   RBW=1MHz, VBW=3MHz PEAK detector for Peak value.

   RBW=1MHz, VBW=10Hz with Average Detector for Average Value.

**Test Mode**

Please refer to the clause 2.3.

**Test Results**

| Frequency(MHz): | | 2419 | | Polarity: | | HORIZONTAL |
|---|---|---|---|---|---|---|
| Frequency (MHz) | Reading Level (dBuV/m) | Correc Factor (dB/m) | Measurement (dBuV/m) | Limit (dBuV/m) | Over (dB) | Detector |
| 2400.00 | 57.62 | -10.92 | 46.70 | 74 | 27.30 | PK |
| 2400.00 | 42.22 | -10.92 | 31.30 | 54 | 22.70 | AV |

| Frequency(MHz): | | 2419 | | Polarity: | | HORIZONTAL |
|---|---|---|---|---|---|---|
| Frequency (MHz) | Reading Level (dBuV/m) | Correc Factor (dB/m) | Measurement (dBuV/m) | Limit (dBuV/m) | Over (dB) | Detector |
| 2400.00 | 52.08 | -10.92 | 41.16 | 74 | 32.84 | PK |
| 2400.00 | 41.45 | -10.92 | 30.53 | 54 | 23.47 | AV |


Add：Building 5, No. 316, Jianghong South Road Binjiang District, Hangzhou 310052, China
Tel：+(86) 0571-8836 6861 Fax: +(86) 0571-8836 6821 E-mail：server@ksign.cn Web: www.ksign.cn

| Frequency(MHz): | | 2472 | | Polarity: | | HORIZONTAL |
|---|---|---|---|---|---|---|
| Frequency (MHz) | Reading Level (dBuV/m) | Correc Factor (dB/m) | Measurement (dBuV/m) | Limit (dBuV/m) | Over (dB) | Detector |
| 2483.50 | 61.37 | -10.88 | 50.49 | 74 | 23.51 | PK |
| 2483.50 | 41.31 | -10.88 | 30.43 | 54 | 23.57 | AV |

| Frequency(MHz): | | 2472 | | Polarity: | | HORIZONTAL |
|---|---|---|---|---|---|---|
| Frequency (MHz) | Reading Level (dBuV/m) | Correc Factor (dB/m) | Measurement (dBuV/m) | Limit (dBuV/m) | Over (dB) | Detector |
| 2483.50 | 60.34 | -10.88 | 49.46 | 74 | 24.54 | PK |
| 2483.50 | 40.67 | -10.88 | 29.79 | 54 | 24.21 | AV |

Note:

1) Level (dBμV/m)= Reading (dBμV)+ Factor (dB/m)

Factor(dB/m)=Antenna Factor (dB/m) + Cable loss (dB) - Pre Amplifier gain (dB)


Add：Building 5, No. 316, Jianghong South Road Binjiang District, Hangzhou 310052, China
Tel：+(86) 0571-8836 6861 Fax: +(86) 0571-8836 6821 E-mail：server@ksign.cn Web: www.ksign.cn

# 4.EUT TEST PHOTOS

| Radiated Measurement (Below 1GHz) |
| --- |
| |
| Radiated Measurement (Above 1GHz) |
| 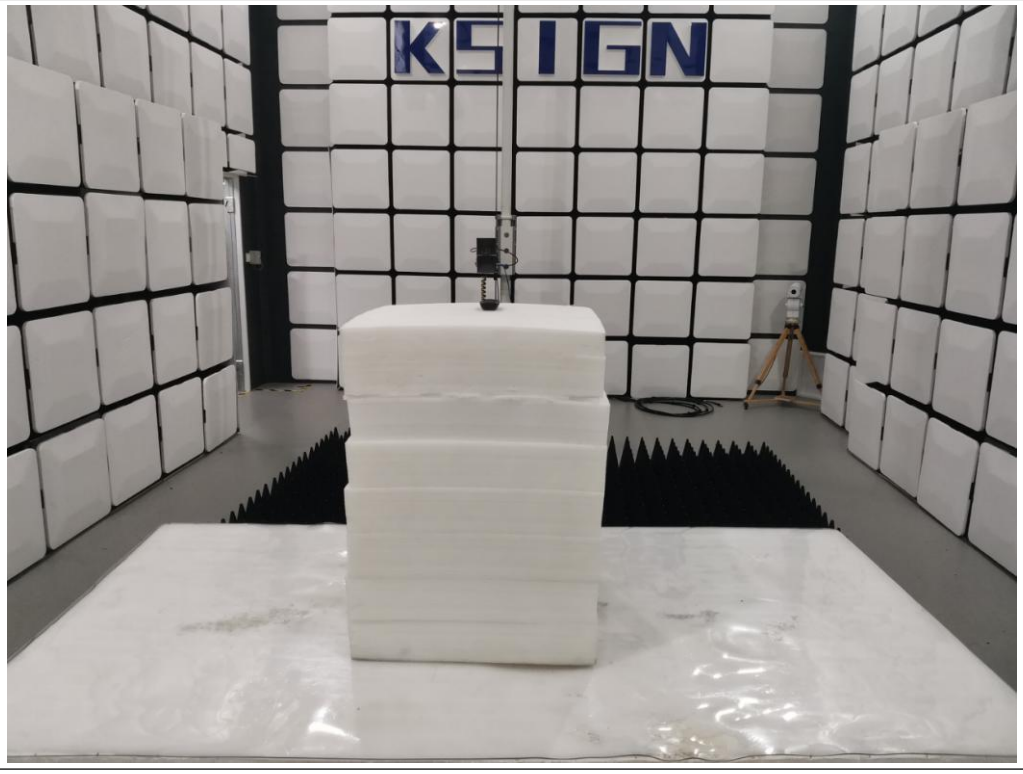 |


Add：Building 5, No. 316, Jianghong South Road Binjiang District, Hangzhou 310052, China
Tel：+(86) 0571-8836 6861 Fax: +(86) 0571-8836 6821 E-mail：server@ksign.cn Web: www.ksign.cn

# 5. PHOTOGRAPHS OF EUT CONSTRUCTIONAL

**External Photographs**

Photo 1

Photo 2

Add：Building 5, No. 316, Jianghong South Road Binjiang District, Hangzhou 310052, China
Tel：+(86) 0571-8836 6861 Fax: +(86) 0571-8836 6821 E-mail：server@ksign.cn Web: www.ksign.cn

Photo 3

Photo 4

Add：Building 5, No. 316, Jianghong South Road Binjiang District, Hangzhou 310052, China
Tel：+(86) 0571-8836 6861 Fax: +(86) 0571-8836 6821 E-mail：server@ksign.cn Web: www.ksign.cn

Photo 5

Photo 6

Add：Building 5, No. 316, Jianghong South Road Binjiang District, Hangzhou 310052, China
Tel：+(86) 0571-8836 6861 Fax: +(86) 0571-8836 6821 E-mail：server@ksign.cn Web: www.ksign.cn

Internal Photographs

Photo 1

Photo 2

Add：Building 5, No. 316, Jianghong South Road Binjiang District, Hangzhou 310052, China
Tel：+(86) 0571-8836 6861 Fax: +(86) 0571-8836 6821 E-mail：server@ksign.cn Web: www.ksign.cn

Photo 3

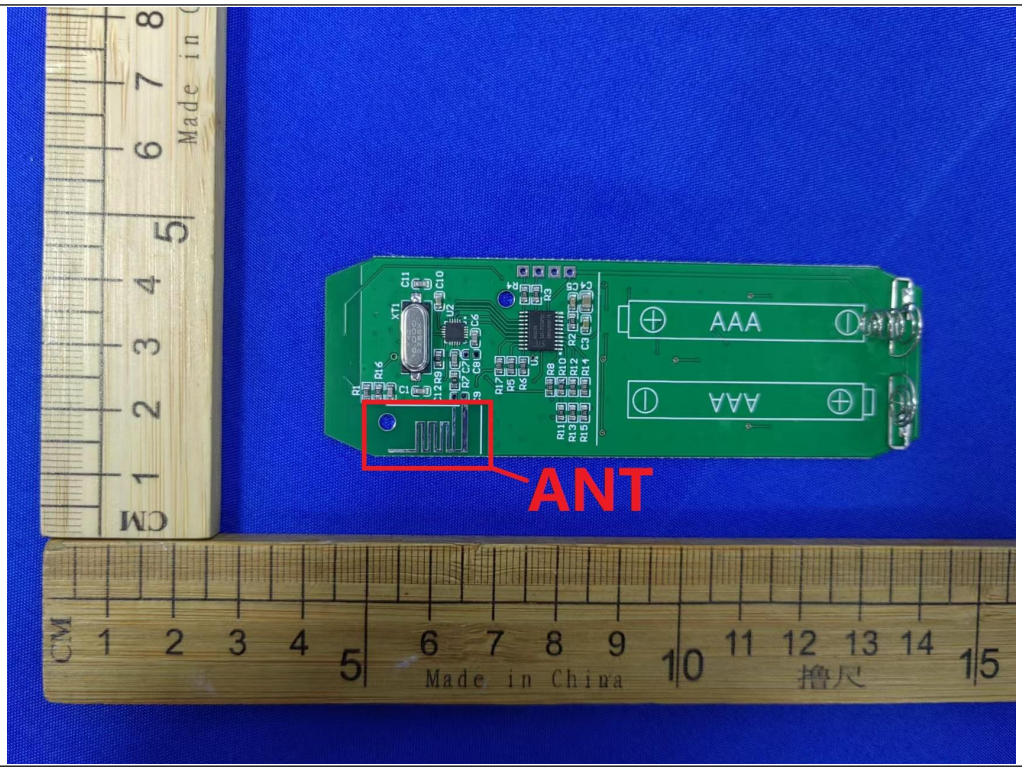


Photo 4

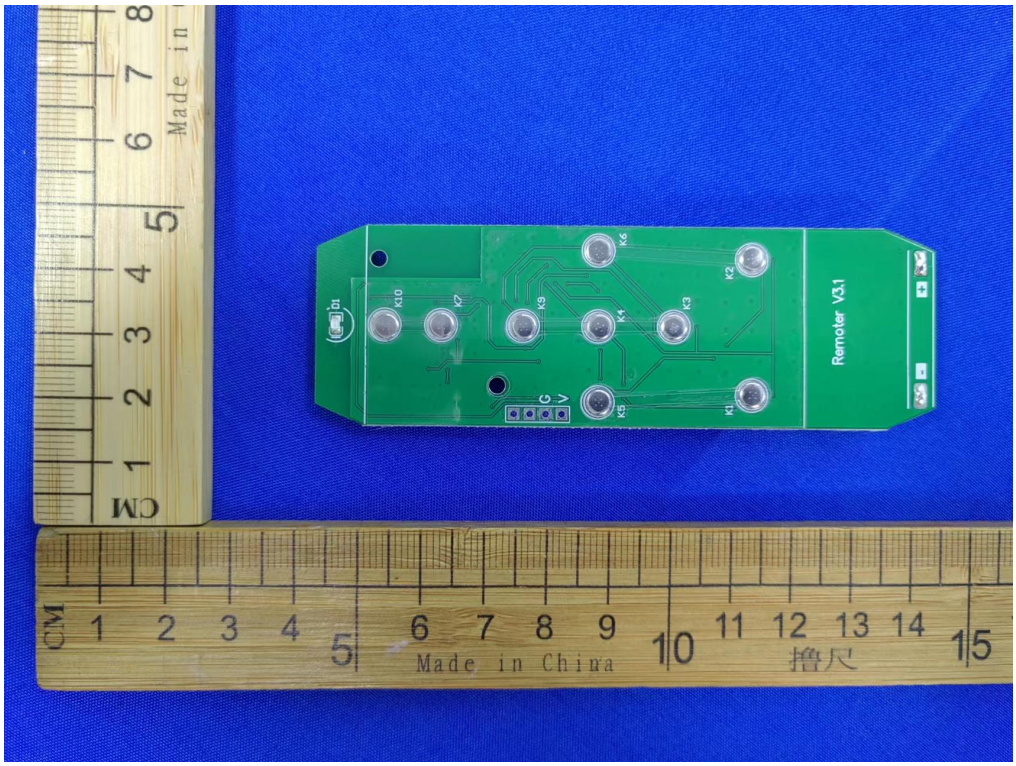



Add：Building 5, No. 316, Jianghong South Road Binjiang District, Hangzhou 310052, China
Tel：+(86) 0571-8836 6861 Fax: +(86) 0571-8836 6821 E-mail：server@ksign.cn Web: www.ksign.cn

Photo 5

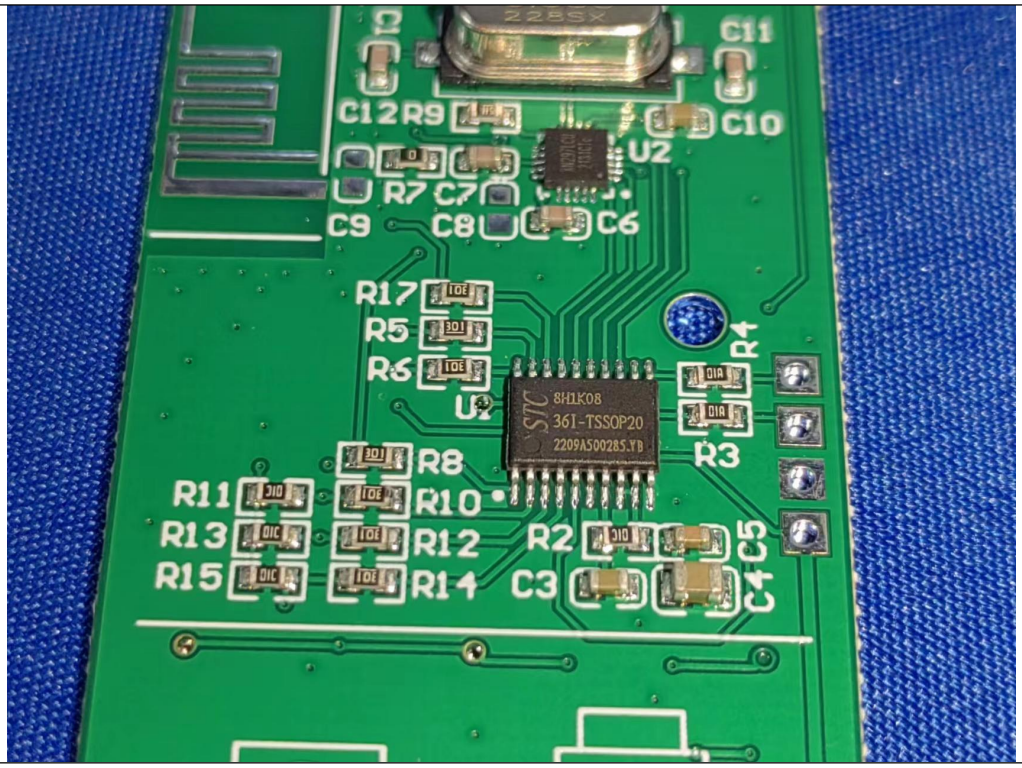


**--THE END--**


Add：Building 5, No. 316, Jianghong South Road Binjiang District, Hangzhou 310052, China
Tel：+(86) 0571-8836 6861 Fax: +(86) 0571-8836 6821 E-mail：server@ksign.cn Web: www.ksign.cn