Artwork:		
Brand: BRAND	Model No: M038CA	Delivery Date:
File No:	Materiel No:	

1. Rating Label for Main Unit

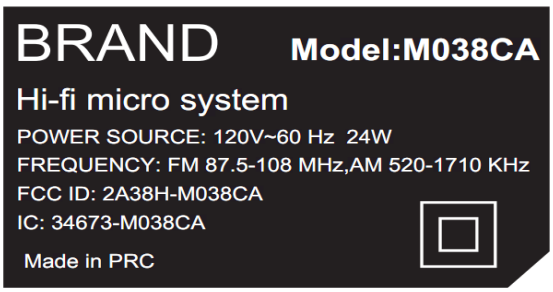

Label size: 39.2mmx23.2mm
Material: Cool grey 6C text on black background, PP coated.
Location: To be affixed on recess of back cabinet of main unit.

2 DHHS & FCC LABEL

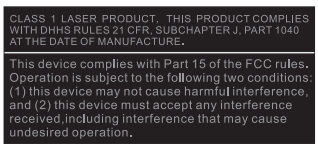

Label size: 41x 18mm
Material: Cool grey 6C text on black background, PP coated.
Location: To be affixed on recess of back cabinet of main unit.

3. TECHNICIAN CAUTION LABEL

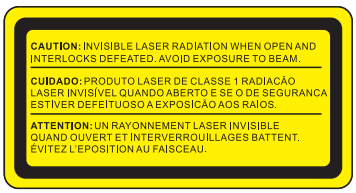

Label size: 46x24 mm
Material: Black text on yellow background, PP coated.
Location: To be affixed inside cabinet of main unit

4. Remote Control Label

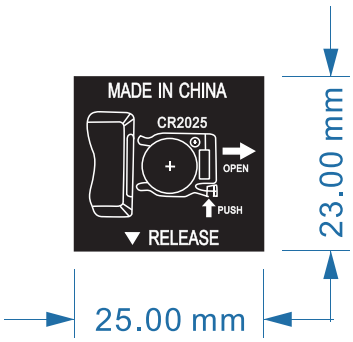

Label size: 25x23mm
Material: White text on black background, PP coated.
Location: To be printed on back cabient of ermote control

设计Design Dept	市场Marketing Dept	采购部Buy Dept	品质部Quality Dept	生产部Make Dept	丝印部Silkscreen Dept