Studebaker

Bluetooth

TECHMATE
Multi-Function Travel Companion

SB3590 OWNER'S MANUAL

BC

Please read this Instruction Manual carefully before using the unit and retain it for future reference

Please contact Spectra Customer Service at 1-800-777-5331 if you have any questions about operating this product

WARNING

TO PREVENT FIRE OR SHOCK HAZARD, DO NOT USE THIS PLUG WITH AN EXTENSION CORD, RECEPTACLE OR OTHER OUTLET UNLESS THE BLADES CAN BE FULLY INSERTED TO PREVENT BLADE EXPOSURE. TO PREVENT FIRE OR SHOCK HAZARD, DO NOT EXPOSE THIS APPLIANCE TO RAIN OR MOISTURE.

The lightning flash with arrowhead symbol, within an equilateral triangle is intended to alert the user to the presence of uninsulated dangerous voltage within the product is enclosure that may be of sufficient magnitude to constitute a risk of electric shock to persons.	**CAUTION** **RISK OF ELECTRIC SHOCK DO NOT OPEN** CAUTION TO REDUCE THE RISK OF ELECTRIC SHOCK, DO NOT REMOVE COVER (OR BACK). NO USER-SERVICEABLE PARTS INSIDE. REFER SERVICING TO QUALIFIED SERVICE PERSONEL.	The exclamation point within an equilateral triangle is intended to alert the user to the presence of important operating and maintenance (servicing) instructions in the literature accompanying the appliance.

The Rating plate is located at the bottom enclosure of the apparatus.

IMPORTANT SAFETY INSTRUCTIONS

1. Read these instructions.
2. Keep these instructions.
3. Heed all warnings.
4. Follow all instructions.
5. Do not use this apparatus near water.
6. Clean only with dry cloth.
7. Do not block any ventilation openings. Install in accordance with the manufacturer's instructions.
8. Do not install near any heat sources such as radiators, heat registers, stoves, or other apparatus (including amplifiers) that product heat.
9. AC adaptor is used as disconnect device and it should remain readily operable during intended use. To disconnect the apparatus from the mains completely, the AC adaptor should be disconnected from the mains socket outlet completely.
10. Only use attachments/accessories specified by the manufacturer.
11. Unplug this apparatus during lightning storms or when unused for a long period of time.
12. Refer all servicing to qualified service personnel. Servicing is required when the apparatus has been damaged in any way, such as power-supply cord or plug is damaged, liquid has been spilled or objects have fallen into the apparatus, the apparatus has been exposed to rain or moisture, does not operate normally, or has been dropped.
13. This appliance shall not be exposed to dripping or splashing water and that no object filled with liquids such as vases shall be placed on the apparatus.
14. Do not overload wall outlet. Use only power source as indicated.
15. Use replacement part as specified by the manufacturer.
16. Upon completion of any service or repairs to this product, ask the service technician to perform safety checks.

17. Power Sources - This product should be operated only from the type of power source indicated on the marking label. If you are not sure of the type of power supply to your home, consult your product dealer or local power company. For products intended to operate from battery power, or other sources, refer to the operating instruction.
18. Object and Liquid Entry - Never push objects of any kind into this product through openings as they may touch dangerous voltage points or short-out parts that could result in a fire or electric shock. Never spill liquid of any kind on the product.
19. Damage Requiring Service - Unplug this product from the wall outlet and refer servicing to qualified service personnel under the following conditions:
    a) When the power-supply cord or plug is damaged,
    b) If liquid has been spilled, or objects have fallen into the product,
    c) If the product has been exposed to rain or water,
    d) If the product does not operate normally by following the operating instructions. Adjust only those controls that are covered by the operating instructions as an improper adjustment of other controls may result in damage and will often require extensive work by a qualified technician to restore the product to its normal operation.
    e) If the product has been dropped or damaged in any way, and
    f) When the product exhibits a distinct change in performance - this indicates a need for service.
20. The battery shall not be exposed to excessive heat such as sunshine, fire or the like.
21. Minimum distances of 4 inches around the apparatus for sufficient ventilation.
22. The ventilation should not be impeded by covering the ventilation openings with items, such as newspapers, tablecloths, curtains, etc.
23. No open flame sources, such as lit candles, should be placed on the product.
24. The use of apparatus in moderate climates is advised.
25. Attention should be drawn to the environmental aspects of battery disposal.

SAVE THESE INSTRUCTIONS

COMPLIANCE WITH FCC REGULATIONS

FCC ID: 2A38HSB3590

This device complies with Part 15 of the FCC Rules. Operation is subject to the following two conditions:

(1) This device may not cause harmful interference, and
(2) This device must accept any interference received, including interference that may cause undesired operation.

This equipment has been tested and found to comply with the limits for a class B digital device, pursuant to Part 15 of the FCC Rules. These limits are designed to provide reasonable protection against harmful interference in a residential installation. This equipment generates uses and can radiate radio frequency energy and, if not installed and used in accordance with the instructions, may cause harmful interference to radio communications. However, there is no guarantee that interference will not occur in a particular installation. If this equipment does cause harmful interference to radio or television reception, which can be determined by turning the equipment off and on, the user is encouraged to try to correct the interference by one or more of the following measures:

- Reorient or relocate the receiving antenna.
- Increase the separation between the equipment and receiver.
- Connect the equipment into an outlet on a circuit different from that to which the receiver is connected.
- Consult the dealer or an experienced radio/TV technician for help.

CAUTION: Changes or modifications not expressly approved by the party responsible for compliance could void the user's authority to operate the equipment.

FCC RF exposure statement:
The equipment complies with FCC Radiation exposure limit set forth for uncontrolled environment. The device shall be operated and installed without restrcition.

PROTECT YOUR FURNITURE!!

This system is equipped with non-skid rubber 'feet' to prevent the product from moving when you operate the controls. These 'feet' are made from non-migrating rubber material specially formulated to avoid leaving any marks or stains on your furniture. However certain types of oil based furniture polishes, wood preservatives, or cleaning sprays may cause the rubber 'feet' to soften, and leave marks or a rubber residue on the furniture.
To prevent any damage to your furniture we strongly recommend that you purchase small self-adhesive felt pads, available at hardware stores and home improvement centers everywhere, and apply these pads to the bottom of the rubber 'feet' before you place the product on fine wooden furniture.

DEAR STUDEBAKER CUSTOMER

Selecting fine audio equipment such as the unit you've just purchased is only the start of your musical enjoyment. Now it's time to consider how you can maximize the fun and excitement your equipment offers. This manufacturer and the Electronic Industries Association's Consumer Electronics Group want you to get the most out of your equipment by playing it at a safe level. One that lets the sound come through loud and clear without annoying blaring or distortion and, most importantly, without affecting your sensitive hearing.
Sound can be deceiving. Over time your hearing "comfort level" adapts to higher volumes of sound. So, what sounds "normal" can actually be loud and harmful to your hearing. Protect against this by setting your equipment at a safe level BEFORE your hearing adapts.

To establish a safe level:

- Start your volume control at a low setting.
- Slowly increase the sound until you can hear it comfortably and clearly, and without distortion.

Once you have established a comfortable sound level:

- Set the dial and leave it there.

Taking a minute to do this now will help to prevent hearing damage or loss in the future. After all, we want you listening for a lifetime.

We Want You Listening for a Lifetime

Used wisely, your new sound equipment will provide a lifetime of fun and enjoyment. Since hearing damage from loud noise is often undetectable until it is too late, this manufacturer and the Electronic Industries Association's Consumer Electronics Group recommend you avoid prolonged exposure to excessive noise.

Customer's Record:

The serial number of this product is found on its bottom. You should note the serial number of this unit in the space provided as a permanent record of your purchase to aid in identification in the event of theft of loss.

Model Number: SB3590 **Serial Number:**

WHAT'S IN THE BOX ?

1. Techmate Multi-Function Travel Companion x 1
2. AC adaptor x 1
3. USB-C cable x 1
4. Manual x 1

LOCATION OF CONTROLS

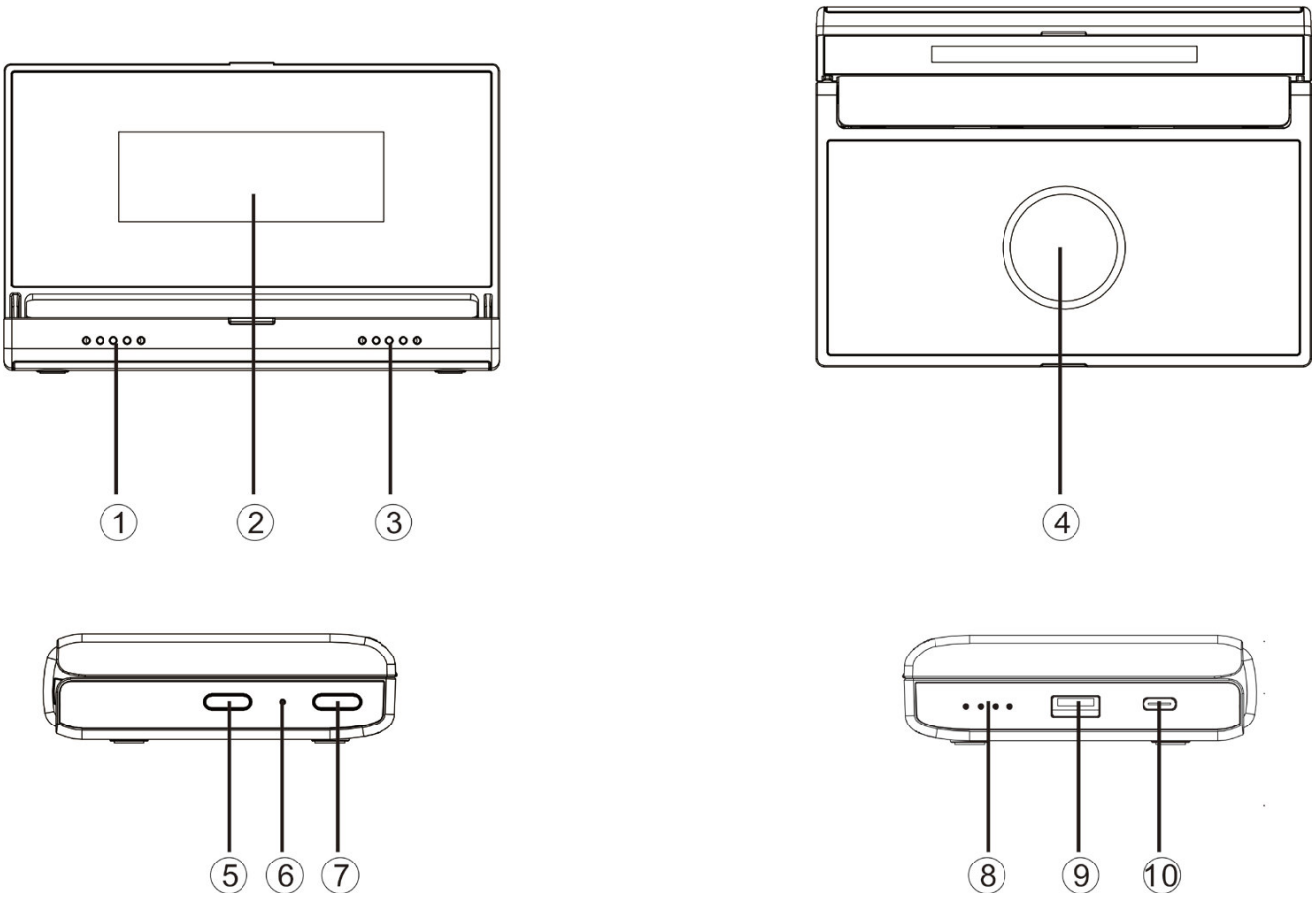

1	LEFT SPEAKER	6	BLUETOOTH INDICATOR
2	LCD DISPLAY	7	DIMMER BUTTON
3	RIGHT SPEAKER	8	BATTERY INDICATORS
4	WIRELESS CHARGE BASE	9	USB-A PORT
5	BLUETOOTH PAIR BUTTON	10	USB-C PORT

POWER SOURCE

A 3.7V DC rechargeable lithium battery is installed in the unit.

Lithium Battery Safety Instructions
Do not burn or bury batteries. Do not puncture or crush. Do not disassemble.
Recycle Lithium batteries. Do not dispose of in the trash.
If the electrolyte in the cells should get on your skin, thoroughly wash with soap and water. If in the eyes, rinse thoroughly with cool water. Immediately seek medical attention.
Use only chargers rated for Lithium cells. Be sure the charger's voltage and current settings are correct for the battery pack being charged.
Charge batteries on a fireproof surface away from flammable items or liquids. Batteries should NEVER be left unattended while charging. Only adults should charge the batteries. Follow the manufacturer's instructions for charging the product and do not charge longer than recommended. Unplug the charger when the battery is charged.

Recycle Rechargeable Batteries
Recycle your old rechargeable batteries at one of the many collection sites in the U.S. and Canada. To find the site nearest you, visit www.call2recycle.org or call toll-free 1-877-2-RECYCLE.
USB POWER

Charging the unit

1. Plug one side of the USB-C cable (included) to the USB-C PORT (#10) on the right side of the unit.
2. Plug another side of the USB-C cable to the USB adaptor (included).
3. Ensure the AC adaptor is plugged into a 120V AC, 60Hz household outlet.
4. The BATTERY INDICATORS (#8) will turn on. The flashing LED will show the battery level.
5. Four BATTERY INDICATORS (#8) will light up steadily when the built-in battery is fully charged.

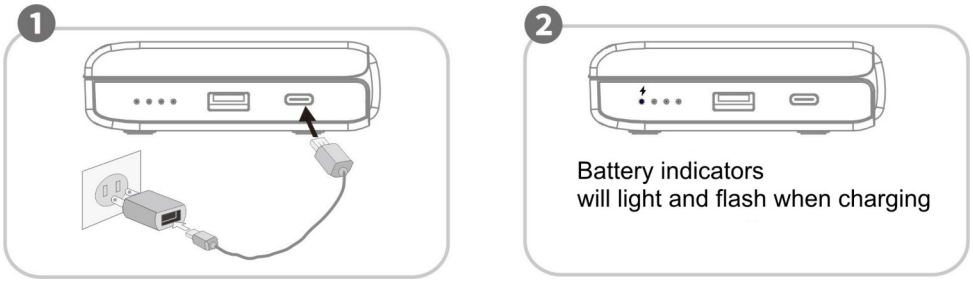

Notes:

- The USB power adaptor described above is the PD Quick Charger commonly used with smartphones.
- This unit supports fast charging. The time required to fully charge the unit depends on the power adapter power.

Remark:
When the built-in battery power remains around 10%, the last BATTERY INDICATOR (#8) will start to flash.

CLOCK SETTING

This unit features BATS – Bluetooth Automatic Time Set.
When any smart phone is connected through Bluetooth, the unit will automatically synchronize with the smart phone's clock. The unit may request authorization to access your smart phone.

Note: The PM icon on the LCD DISPLAY (#2) will light when the hour is set to PM and will be off when the hour is set to AM

BLUETOOTH OPERATION

1. Open the cover of the unit. The display will turn on and show the clock.
2. The Bluetooth icon will turn on and flash on the LCD display (#2).
3. Turn on the Bluetooth function of your device and enable the search or scan function to find the SB3590.
4. Select SB3590 from the device list when it appears on your device screen. If required, enter the pass code "0000" to pair (link) SB3590 with your device.
5. If you are pairing (linking) your computer to the speaker using Bluetooth, you may need to set the SB3590 as your computer's default sound device.
6. After pairing SB3590 with your Bluetooth device successfully, The Bluetooth icon will light steadily.
7. If you want SB3590 to pair with another Bluetooth device, press and hold the BLUETOOTH PAIR BUTTONN (#5), the Bluetooth icon will flash. The unit will go into Pairing/Discoverable mode. Repeat steps 4 & 5.

Now you can wirelessly play music from your Bluetooth device to the SB3590.
1. Selecting your favorite song, press the Play/Pause Button on your Bluetooth device.
2. Slowly adjust the volume controls of your Bluetooth device until you reach a comfortable listening level.

Notes:
1. Refer to the manual of your cell phone, tablet PC, computer or other Bluetooth enabled devices for Bluetooth operation since it may vary from model to model.
2. If your Bluetooth enabled device does not support A2DP profile, it will not play the music through the speaker, even if paired (linked).
3. If the unit does not paired/linked with any Bluetooth device, the Bluetooth function will turn off after 2 minutes for power saving.

WIRELESS CHARGING

SB3590 supports wireless charging for Smart Phones.

1. Place your smart phone (wireless charging compatible) on the charging pad in Horizontal position.
2. The wireless charge icon will light on the LCD DISPLAY (#2) to indicate the device is charging.
3. Observe the battery charge indicator on your smart phone to make sure the charging process starts normally.
4. Remove the smart phone from the charging pad when it is fully charged.

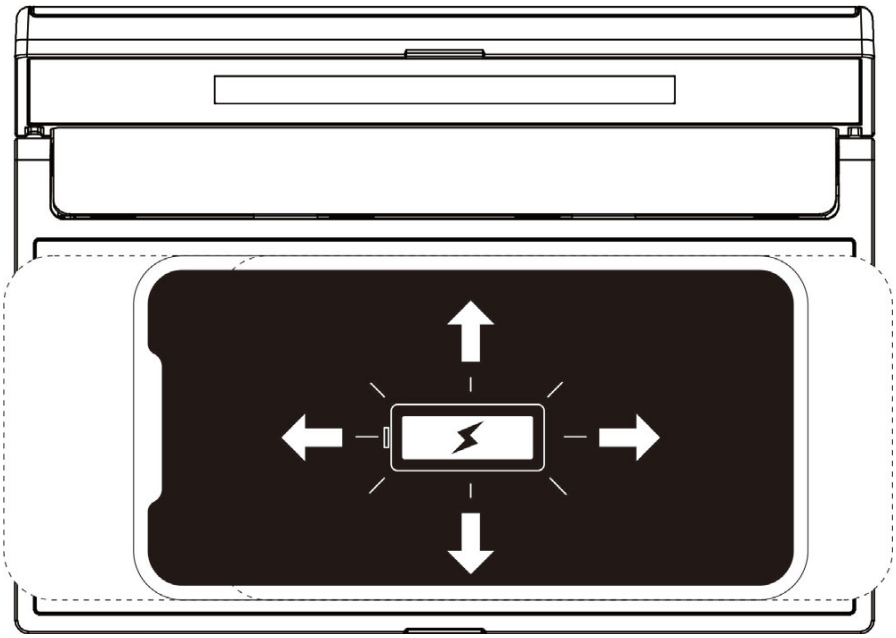

Notes:

- If the wireless charge does not function immediately when you place your phone on the charging pad, tap DIMMER BUTTON (7) or BLUETOOTH PAIR BUTTON (#5) to activate the wireless charge function.
- The charging time is varied due to different smart phones and the battery's condition.
- Remove your phone from any metal or magnetic protective case before placing it on the Charging Pad. Do not place any metal objects or magnetic-striped devices on the Charging Pads. Doing so could damage the object or this unit.
- Qi compatible phones with metallic finishes will charge normally.

Qi WIRELESS CHARGING FAQ AND COMPATIBILITY

Visit www.spectraintl.com/FAQ and click on **"WIRELESS CHARGING FAQ"** for more information on Qi Charging and a list of devices compatible with the Qi charging system.

USB CHARGING

The unit has 1 USB-A output port and 1 USB-C output port located at the right side of the unit for operating/charging other USB devices.

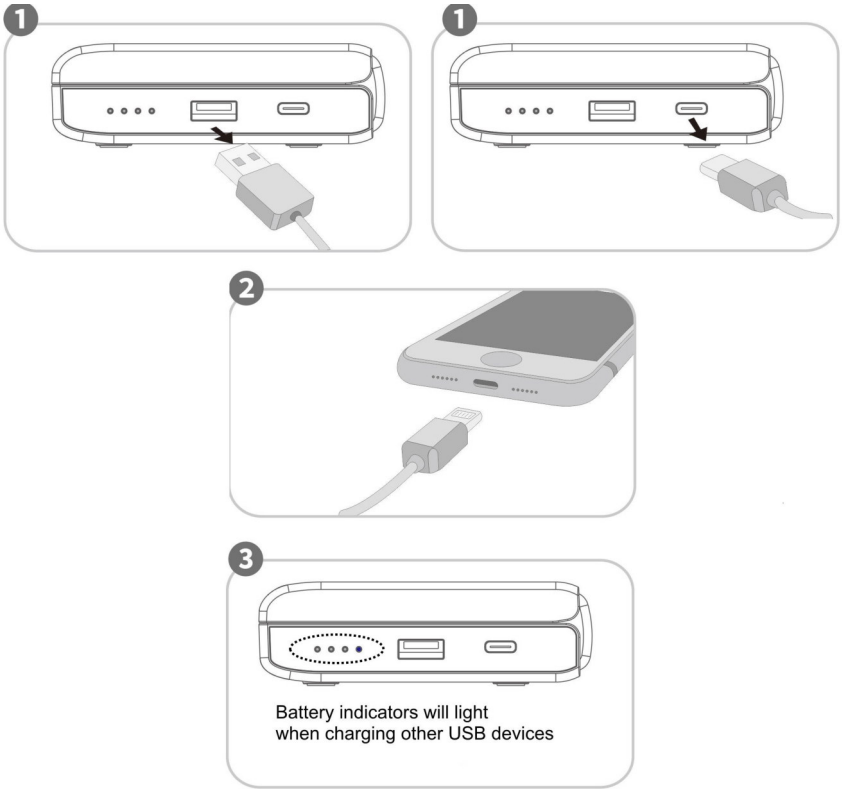

The unit can support 20W/22.5W fast charging and is compatible with mainstream fast charging devices for fast charging. However, when the unit charges 2 USB devices at the same time, each port of the unit can only supply 10W.

1. Plug the standard end of the USB cable (not included) into the USB-A CHARGING PORT (#9) located on the right side of the unit. Plug the other end of the cable into the device you wish to charge.
   Or
2. Plug the one end of the USB-C cable (included) into the USB-C CHARGING PORT (#10) located on the right side of the unit. Plug the other end of the cable into the device you wish to charge.
3. The BATTERY INDICATORS will light and flash when charging.
4. Observe the battery charge indicator on your device to make sure the charging process starts normally.
5. Unplug the cable when your device is fully charged.

WARNING!

- The USB ports located on the right side of the unit is designed for a smart phone or portable device battery charging only and does not support data transfer or connection to a computer.
- Don’t connect the USB-A port (#9) of the unit to another USB charger. It may damage both units and void the warranty.

DIMMER OPERATION

Press and hold the DIMMER BUTTON (#7) repeatedly to select the brightness settings (HIGH, MEDIUM or LOW) of the LCD DISPLAY (#2).

RESETTING THE UNIT

If the unit does not respond or exhibits erratic or intermittent operation, you may have experienced an electrostatic discharge (ESD) or a power surge that triggered the internal microcontroller to shut down automatically. If this occurs, simply press and hold the DIMMER button for 10 seconds. The LCD DISPLAY (#2) will then show 12:00 and flash.
The unit is reset. You will need to connect the unit with your smart phone through Bluetooth to set the clock again.

CARE AND MAINTENANCE

1. Do not subject the unit to excessive force, shock, dust or extreme temperature.
2. Do not tamper with the internal components of the unit.
3. Clean your unit with a dry cloth. Solvent or detergent should never be used.
4. Avoid leaving your unit in direct sunlight or in hot, humid or dusty places.
5. Keep your unit away from heating appliances and sources of electrical noise such as fluorescent lamps or motors.

SPECTRA® green

At Spectra, environmental and social responsibility is a core value of our business. We are dedicated to continuous implementation of responsible initiatives with an aim to conserve and maintain the environment through responsible recycling.

Please visit us at http://www.spectraintl.com/green.htm for more information on Spectra's green initiatives or to find a recycler in your area.

TROUBLE SHOOTING GUIDE

If you experience difficulties in the use of this clock radio, please check the following or call 1-800-777-5331 for Customer Service and support.

Symptom	Possible Cause	Solution
Sound appears distorted at high volume setting	- Volume control is set to maximum.	- Adjust Volume control of your smart phone to a lower comfortable level.
No charging from the USB port	- The USB cable is damaged or not securely attached	- Replace the USB cable or try reconnecting it again
Wireless charging is slow	There is a protective case on the surface of the mobile phone.	Take off the protective case from the mobile phone.
No charging from wireless pads	- Device is not in correct position. - The device does not support wireless charging.	- Move the device around the wireless pad until the wireless charging indicator light. - Change to use USB charging port.
No sound on Bluetooth	- The unit is not linked with the cell phone. - Speaker placement out of range. - Volume set too low.	- Go through “Bluetooth Operations” process to link the speakers. - Relocate the speaker within Bluetooth operating range. - Adjust Volume control of your smart phone to turn the sound level up.

The Bluetooth® word mark and logos are registered trademarks owned by Bluetooth SIG, Inc. and any use of such marks by Spectra Merchandising Intl, Inc. is under license. Other trademarks and trade names are those of their respective owners.

SPECIFICATION

AC adaptor (PD Quick Charger):
Input: AC 100-240V~ 50/60Hz 0.8A Max.
Output: DC 5V⎓ 3A / 9V⎓ 3A / 12V⎓ 2.5A / 15V⎓ 2A / 20V⎓ 1.5A
PPS: DC 3.3V -11V ⎓ 3A
PPS: DC 3.3V – 16V ⎓ 2A

Internal Li-Polymer battery:
Input (USB-C port): DC 5V/3A / 9V/2.3A /12V/1.5A
Out Power: 22.5W (Max)
Output (USB-A port): DC 5V⎓ 3.1A / 9V⎓ 2.0A / 12V⎓ 1.5A
Output (USB-C port): DC 5V⎓ 3.1A / 9V⎓ 2.0A / 12V⎓ 1.5A

1 YEAR LIMITED WARRANTY AND SERVICE
VALID IN THE U.S.A. ONLY

SPECTRA MERCHANDISING INTERNATIONAL, INC. warrants this unit to be free from defective materials or factory workmanship for a period of 1 year from the date of original customer purchase and provided the product is utilized within the U.S.A. This warranty is not assignable or transferable. Our obligation under this warranty is the repair or replacement of the defective unit or any part thereof, except batteries, when it is returned to the SPECTRA Service Department, accompanied by proof of the date of original consumer purchase, such as a duplicate copy of a sales receipt.
You must pay all shipping charges required to ship the product to SPECTRA for warranty service. If the product is repaired or replaced under warranty, the return charges will be at SPECTRA's expense. There are no other express warranties other than those stated herein. This warranty is valid only in accordance with the conditions set forth below:

1. The warranty applies to the SPECTRA product only while:
   a. It remains in the possession of the original purchaser and proof of purchase is demonstrated.
   b. It has not been subjected to accident, misuse, abuse, improper service, usage outside the descriptions and warnings covered within the user manual or non-SPECTRA approved modifications.
   c. Claims are made within the warranty period.
2. This warranty does not cover damage or equipment failure caused by electrical wiring not in compliance with electrical codes or SPECTRA user manual specifications, or failure to provide reasonable care and necessary maintenance as outlined in the user manual.
3. Warranty of all SPECTRA products applies to residential use only and is void when products are used in nonresidential environment or installed outside the United States.

This warranty gives you specific legal rights, and you may also have other rights which vary from state to state. TO OBTAIN SERVICE please remove all batteries (if any) and pack the unit carefully and send it freight prepaid to SPECTRA at the address shown below. IF THE UNIT IS RETURNED WITHIN THE WARRANTY PERIOD shown above, please include a proof of purchase (dated cash register receipt) so that we may establish your eligibility for warranty service and repair of the unit without cost. Also include a note with a description explaining how the unit is defective. A customer service representative may need to contact you regarding the status of your repair, so please include your name, address, phone number and email address to expedite the process.

It is recommended that you contact SPECTRA first at 1-800-777-5331 or by email at custserv@spectraintl.com for updated information on the unit requiring service. In some cases, the model you have may be discontinued, and SPECTRA reserves the right to offer alternative options for repair or replacement.
SPECTRA MERCHANDISING INTERNATIONAL, INC.
4230 North Normandy Avenue,
Chicago, IL60634, USA. 1-800-777-5331
To register your product, visit the link on the website below to enter your information.
http://www.spectraintl.com/wform.htm

0124

Printed in China
(SB3590, SB3590B, SB3590RG, SB3590L)