MEASUREMENT REPORT

FCC Part 15 Subpart B

FCC ID:	2A38RDAP64X
Applicant:	Belden Hirschmann Industries (Suzhou) Ltd.
Product:	HIT Dragonfly Access Point
Model No.:	DAP645-RW, DAP645-ME, DAP645-US, DAP645-JP DAP646-RW, DAP646-ME, DAP646-US, DAP646-JP DAP647-RW, DAP647-ME, DAP647-US, DAP647-JP
Brand Name:	HIRSCHMANN IT
FCC Rule Part(s):	FCC Part 15 Subpart B: 2020
Test Procedure(s):	ANSI C63.4: 2014
Test Date:	March 01 ~ 03, 2020

Reviewed By: Sunny Sun

Approved By: Robin Wu

ACCREDITED
TESTING LABORATORY
CERTIFICATE #3628.01

The test results relate only to the samples tested.
This equipment has been shown to be capable of compliance with the applicable technical standards as indicated in the measurement report and was tested in accordance with the measurement procedures specified in ANSI C63.4-2014. Test results reported herein relate only to the item(s) tested.
The test report shall not be reproduced except in full without the written approval of MRT Technology (Suzhou) Co., Ltd.

Revision History

Report No.	Version	Description	Issue Date	Note
2201RSU009-U5	Rev. 01	Initial Report	03-23-2022	Invalid
2201RSU009-U5	Rev. 02	Added the 802.11a in Wi-Fi Specification.	03-30-2022	Valid

Note: This is a copy report based on MRT original report (report No.: 1911RSU003-U5). It changed the information of the applicant and the product. The hardware and software of the product are the same.
DAP645-RW/DAP646-RW/DAP647-RW corresponds to the three models in the original report respectively. Only a slight change in appearance, which has no impact on the test results.

CONTENTS

Description Page

General Information **4**

1. INTRODUCTION **5**

1.1. Scope 5
1.2. MRT Test Location 5

2. PRODUCT INFORMATION **6**

2.1. Equipment Description 6
2.2. Test Mode 6
2.3. Configuration of Tested System 7
2.4. Test System Details 8
2.5. EMI Suppression Device(s)/Modifications 8

3. DESCRIPTION OF TEST **9**

3.1. Evaluation Procedure 9
3.2. AC Line Conducted Emissions 9
3.3. Radiated Emissions 10

4. TEST EQUIPMENT CALIBRATION DATE **11**

5. MEASUREMENT UNCERTAINTY **12**

6. TEST RESULT **13**

6.1. Summary 13
6.2. Conducted Emission Measurement 14
6.2.1. Test Limit 14
6.2.2. Test Setup 14
6.2.3. Test Result of Conducted Emissions 15
6.3. Radiated Emission Measurement 17
6.3.1. Test Limit 17
6.3.2. Test Setup 17
6.3.3. Test Result of Radiated Emissions 19

7. CONCLUSION **23**

Appendix A - Test Setup Photograph **24**

Appendix B - EUT Photograph **25**

General Information

Applicant:	Belden Hirschmann Industries (Suzhou) Ltd.
Applicant Address:	333 Yanhu Road, Huaqiao Town, Kunshan City, Jiangsu Province, P. R. China
Manufacturer:	Belden Hirschmann Industries (Suzhou) Ltd.
Manufacturer Address:	333 Yanhu Road, Huaqiao Town, Kunshan City, Jiangsu Province, P. R. China
Test Site:	MRT Technology (Suzhou) Co., Ltd
Test Site Address:	D8 Building, No.2 Tian'edang Rd., Wuzhong Economic Development Zone, Suzhou, China
Test Device Serial No.:	N/A ☐ Production ☒ Pre-Production ☐ Engineering

Test Facility / Accreditations

Measurements were performed at MRT Laboratory located in Tian'edang Rd., Suzhou, China.

- **MRT facility is a FCC accredited (MRT Designation No. CN1166) test facility with the site description report on file and has met all the requirements specified in ANSI C63.4-2014.**
- **MRT facility is an IC registered (MRT Reg. No. 11384A-1) test laboratory with the site description on file at Industry Canada.**
- **MRT facility is a VCCI registered (R-20025, G-20034, C-20020, T-20020) test laboratory with the site description on file at VCCI Council.**
- **MRT Lab is accredited to ISO 17025 by the American Association for Laboratory Accreditation (A2LA) under the American Association for Laboratory Accreditation Program (A2LA Cert. No. 3628.01) in EMC, Telecommunications, Radio and SAR testing.**

Accredited Laboratory

A2LA has accredited

MRT TECHNOLOGY (SUZHOU) CO., LTD.

Suzhou, Jiangsu, People's Republic of China

for technical competence in the field of

Electrical Testing

This laboratory is accredited in accordance with the recognized International Standard ISO/IEC 17025:2017 General requirements for the competence of testing and calibration laboratories. This accreditation demonstrates technical competence for a defined scope and the operation of a laboratory quality management system (refer to joint ISO-ILAC-IAF Communiqué dated April 2017).

Presented this 24th day of July 2018.

President and CEO
For the Accreditation Council
Certificate Number 3628.01
Valid to August 31, 2020

For the tests to which this accreditation applies, please refer to the laboratory's Electrical Scope of Accreditation.

1. INTRODUCTION

1.1. Scope

Measurement and determination of electromagnetic emissions (EMC) of radio frequency devices including intentional and/or unintentional radiators for compliance with the technical rules and regulations of the Federal Communications Commission and the Innovation, Science and Economic Development Canada.

1.2. MRT Test Location

The map below shows the location of the MRT LABORATORY, its proximity to the Taihu Lake. These measurement tests were conducted at the MRT Technology (Suzhou) Co., Ltd. Facility located at D8 Building, No.2 Tian'edang Rd., Wuzhong Economic Development Zone, Suzhou, China. The measurement facility compliant with the test site requirements specified in ANSI C63.4-2014.

2. PRODUCT INFORMATION

2.1. Equipment Description

Product Name:	HIT Dragonfly Access Point
Model No.:	DAP645-RW, DAP645-ME, DAP645-US, DAP645-JP DAP646-RW, DAP646-ME, DAP646-US, DAP646-JP DAP647-RW, DAP647-ME, DAP647-US, DAP647-JP
Brand Name:	HIRSCHMANN IT
Wi-Fi Specification:	802.11a/b/g/n/ac/ax
Bluetooth Specification:	v5.1
Operating Temperature:	-40 ~ 65 °C
Power Type:	PoE input
Operating Environment:	Outdoor Use
Accessories	
PoE Injector	Model No.: PD-9501GC/AC Input Power: 100 - 240V ~ 50/60Hz, 1.5A Output Power: 55VDC/1.1A

Remark:

1. PoE Injector is not sold with the product.
2. The difference between DAP645, DAP646 and DAP647 is that EUT use different antennas. The -RW, -ME, -US and -JP are only market requirements, all hardware and software are consistent.
3. The information of EUT was provided by the manufacturer, and the accuracy of the information shall be the responsibility of the manufacturer.
4. DAP647-RW was used for testing.

2.2. Test Mode

Test Mode
Mode 1: Power by PoE Adapter & Communicate with Notebook by LAN Cable & Communicate with Notebook and mobile phone by Wi-Fi and Bluetooth & Communicate with DAP645-RW by fiber cable & power and communicate with Access Point by LAN cable.

2.3. Configuration of Tested System

The unit was tested per the guidance FCC Part 15 Subpart B: 2020, and ANSI C63.4: 2014 was used to reference the appropriate EUT setup for radiated spurious emissions testing and AC line conducted testing.

Connection Diagram (Mode 1)

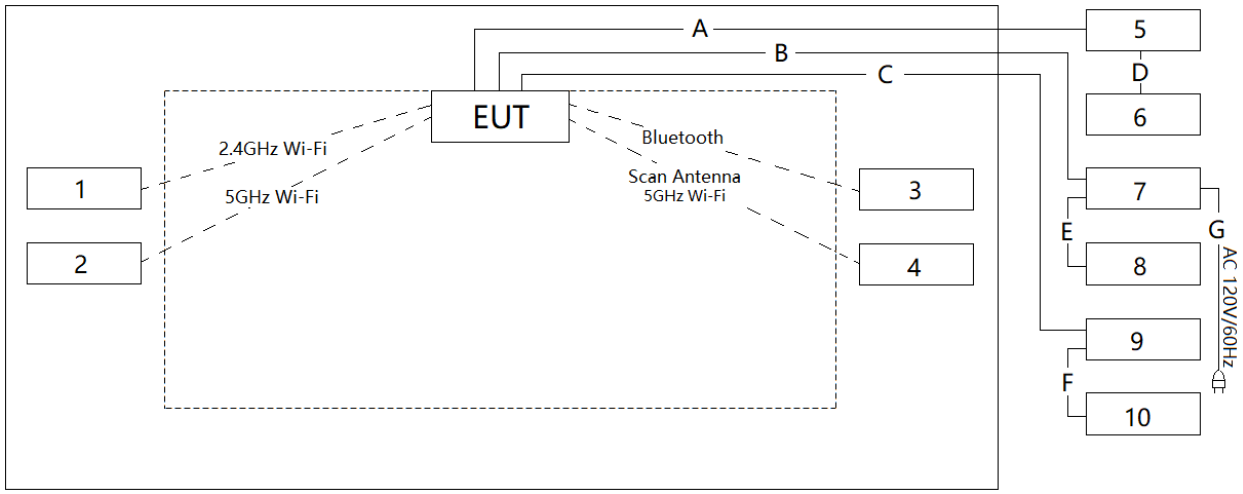

Signal Cable Type		Signal Cable Description
A	Fiber Cable	Non-Shielding, >10m
B	LAN Cable	Non-Shielding, >10m
C	LAN Cable	Non-Shielding, >10m
D	LAN Cable	Non-Shielding, 1.5m
E	LAN Cable	Non-Shielding, 1.5m
F	LAN Cable	Non-Shielding, 1.5m
G	Power Cable	Non-Shielding, 1.5m

2.4. Test System Details

The types for all equipments, plus descriptions of all cables used in the tested system (including inserted cards) are:

Product		Manufacturer	Model No.	Serial No.	Power Cord
1	Notebook	Lenovo	E430c	MP-4CFX213/10	Non-Shielded, 1.8m
2	Notebook	ASUS	PRO45V	N/A	Non-Shielded, 1.8m
3	iPhone	Apple	ML7E2CH/A	C6KR9BR2GRY	N/A
4	Mobile Phone	OPPO	X9009	N/A	N/A
5	Access Point	ALE	OAW-AP1361	N/A	N/A
6	Notebook	Lenovo	E431	PF-10ZRN 13/12	Non-Shielded, 1.8m
7	PoE Adapter	Microsemi	PD-9501GC/AC	N/A	Non-Shielded, 1.8m
8	Notebook	Lenovo	E460	N/A	Non-Shielded, 1.8m
9	Access Point	ALE	OAW-AP1321	N/A	N/A
10	Notebook	Lenovo	X201	N/A	Non-Shielded, 1.8m

2.5. EMI Suppression Device(s)/Modifications

No EMI suppression device(s) were added and/or no modifications were made during testing.

3. DESCRIPTION OF TEST

3.1. Evaluation Procedure

The measurement procedures described in the American National Standard for Methods of Measurement of Radio-Noise Emission from Low-Voltage Electrical Equipment in the Range of 9kHz to 18GHz (ANSI C63.4-2014) was used in the measurement of the device.

Deviation from measurement procedure…….....None

3.2. AC Line Conducted Emissions

The line-conducted facility is located inside an 8'x4'x4' shielded enclosure. A 1m x 2m wooden table 80cm high is placed 40cm away from the vertical wall and 80cm away from the sidewall of the shielded room. Two 10kHz-30MHz, 50Ω/50uH Line-Impedance Stabilization Networks (LISNs) are bonded to the shielded room floor. Power to the LISNs is filtered by external high-current high-insertion loss power line filters. These filters attenuate ambient signal noise from entering the measurement lines. These filters are also bonded to the shielded enclosure.

The EUT is powered from one LISN and the support equipment is powered from the second LISN. If the EUT is a DC-powered device, power will be derived from the source power supply it normally will be powered from and this supply line(s) will be connected to the second LISN. All interconnecting cables more than 1 meter were shortened to a 1 meter length by non-inductive bundling (serpentine fashion) and draped over the back edge of the test table. All cables were at least 40cm above the horizontal reference ground-plane. Power cables for support equipment were routed down to the second LISN while ensuring that that cables were not draped over the second LISN.

Sufficient time for the EUT, support equipment, and test equipment was allowed in order for them to warm up to their normal operating condition. The RF output of the LISN was connected to the receiver and exploratory measurements were made to determine the frequencies producing the maximum emission from the EUT. The receiver was scanned from 150 kHz to 30 MHz. The detector function was set to peak mode for exploratory measurements while the bandwidth of the analyzer was set to 9 kHz. The EUT, support equipment, and interconnecting cables were arranged and manipulated to maximize each emission. Each emission was also maximized by varying: power lines, the mode of operation or resolution, clock or data exchange speed, scrolling H pattern to the EUT and/or support equipment whichever determined the worst-case emission. Once the worst case emissions have been identified, the one EUT cable configuration/arrangement and mode of operation that produced these emissions are used for final measurements on the same test site.

3.3. Radiated Emissions

The radiated test facilities consisted of an indoor 3 meter semi-anechoic chamber used for final measurements and exploratory measurements, when necessary. The measurement area is contained within the semi-anechoic chamber which is shielded from any ambient interference. For measurements above 1GHz absorbers are arranged on the floor between the turn table and the antenna mast in such a way so as to maximize the reduction of reflections. For measurements below 1GHz, the absorbers are removed. An MF Model 210SS turntable is used for radiated measurement. It is a continuously rotatable, remote controlled, metallic turntable and 2 meters (6.56 ft.) in diameter. The turn table is flush with the raised floor of the chamber in order to maintain its function as a ground plane. An 80cm high PVC support structure is placed on top of the turntable.

For all measurements, the spectrum was scanned through all EUT azimuths and from 1 to 4 meter receive antenna height using a broadband antenna from 30 MHz up to the upper frequency shown in 15.33(b)(1) depending on the highest frequency generated or used in the device or on which the device operates or tunes. For frequencies above 1GHz, linearly polarized double ridge horn antennas were used. For frequencies below 30 MHz, a calibrated loop antenna was used. When exploratory measurements were necessary, they were performed at 1 meter test distance inside the semi-anechoic chamber using broadband antennas, broadband amplifiers, and spectrum analyzers to determine the frequencies and modes producing the maximum emissions. Sufficient time for the EUT, support equipment, and test equipment was allowed in order for them to warm up to their normal operating condition. The test set-up was placed on top of the 0.8 meter high, 1 x 1.5 meter table. The EUT, support equipment, and interconnecting cables were arranged and manipulated to maximize each emission. Appropriate precaution was taken to ensure that all emissions from the EUT were maximized and investigated. The system configuration, mode of operation, if applicable, turntable azimuth, and receive antenna height was noted for each frequency found.

Final measurements were made in the semi-anechoic chamber using calibrated, linearly polarized broadband and horn antennas. The test setup was configured to the setup that produced the worst case emissions. The spectrum analyzer was set to investigate all frequencies required for testing to compare the highest radiated disturbances with respect to the specified limits. The turntable containing the EUT was rotated through 360 degrees and the height of the receive antenna was varied 1 to 4 meters and stopped at the azimuth and height producing the maximum emission. Each emission was maximized by changing the orientation of the EUT through three orthogonal planes and changing the polarity of the receive antenna, whichever produced the worst-case emissions. According to 3dB beam-width of horn antenna, the horn antenna should be always directed to the EUT when rising height.

4. TEST EQUIPMENT CALIBRATION DATE

Conducted Emissions - SR2

Instrument	Manufacturer	Type No.	Asset No.	Cali. Interval	Cali. Due Date
EMI Test Receiver	R&S	ESR3	MRTSUE06185	1 year	2020/04/15
Two-Line V-Network	R&S	ENV 216	MRTSUE06002	1 year	2020/06/13
Two-Line V-Network	R&S	ENV 216	MRTSUE06003	1 year	2020/06/13
Thermohygrometer	Testo	608-H1	MRTSUE06404	1 year	2020/08/08
Shielding Room	MIX-BEP	Chamber-SR2	MRTSUE06215	N/A	N/A

Radiated Emissions - AC1

Instrument	Manufacturer	Type No.	Asset No.	Cali. Interval	Cali. Due Date
EMI Test Receiver	R&S	ESR7	MRTSUE06001	1 year	2020/08/01
PXA Signal Analyzer	Keysight	9030B	MRTSUE06395	1 year	2020/09/03
Loop Antenna	Schwarzbeck	FMZB 1519	MRTSUE06025	1 year	2020/11/13
Bilog Period Antenna	Schwarzbeck	VULB 9168	MRTSUE06172	1 year	2020/03/31
Broad Band Horn Antenna	Schwarzbeck	BBHA 9120D	MRTSUE06023	1 year	2020/10/13
Broad Band Horn Antenna	Schwarzbeck	BBHA 9170	MRTSUE06024	1 year	2020/12/29
Microwave System Amplifier	Agilent	83017A	MRTSUE06076	1 year	2020/11/15
Preamplifier	Schwarzbeck	BBV 9721	MRTSUE06121	1 year	2020/06/11
Thermohygrometer	Testo	608-H1	MRTSUE06403	1 year	2020/08/08
Anechoic Chamber	TDK	Chamber-AC1	MRTSUE06212	1 year	2020/04/30

Radiated Emission - AC2

Instrument	Manufacturer	Type No.	Asset No.	Cali. Interval	Cali. Due Date
Spectrum Analyzer	Keysight	N9038A	MRTSUE06125	1 year	2020/08/01
Loop Antenna	Schwarzbeck	FMZB 1519	MRTSUE06025	1 year	2020/11/13
Bilog Period Antenna	Schwarzbeck	VULB 9162	MRTSUE06022	1 year	2020/10/13
Horn Antenna	Schwarzbeck	BBHA9120D	MRTSUE06171	1 year	2020/10/27
Broad Band Horn Antenna	Schwarzbeck	BBHA 9170	MRTSUE06024	1 year	2020/12/29
Broadband Coaxial Preamplifier	Schwarzbeck	BBV 9718	MRTSUE06176	1 year	2020/11/15
Preamplifier	Schwarzbeck	BBV 9721	MRTSUE06121	1 year	2020/06/11
Temperature/Humidity Meter	Minggao	ETH529	MRTSUE06170	1 year	2020/12/15
Anechoic Chamber	RIKEN	Chamber-AC2	MRTSUE06213	1 year	2020/04/30

Software	Version	Function
EMI Software	V3	EMI Test Software

5. MEASUREMENT UNCERTAINTY

Where relevant, the following test uncertainty levels have been estimated for tests performed on the EUT as specified in CISPR 16-4-2. This uncertainty represents an expanded uncertainty expressed at approximately the 95% confidence level using a coverage factor of k = 2.

Conducted Emission - SR2
The maximum measurement uncertainty is evaluated as: 9kHz~150kHz: 3.84dB 150kHz~30MHz: 3.46dB
Radiated Disturbance - AC2
The maximum measurement uncertainty is evaluated as: Horizontal: 30MHz~300MHz: 3.75dB 300MHz~1GHz: 3.53dB 1GHz~18GHz: 4.28dB Vertical: 30MHz~300MHz: 3.86dB 300MHz~1GHz: 3.53dB 1GHz~18GHz: 4.33dB
Radiated Disturbance - AC2
The maximum measurement uncertainty is evaluated as: Horizontal: 30MHz~300MHz: 3.75dB 300MHz~1GHz: 3.53dB 1GHz~18GHz: 4.28dB Vertical: 30MHz~300MHz: 3.86dB 300MHz~1GHz: 3.53dB 1GHz~18GHz: 4.33dB

6. TEST RESULT

6.1. Summary

Normative References	Test Description	Test Result (Pass/Fail)
15.107_Class A	Conducted Emission	Pass
15.109_Class A	Radiated Emission	Pass

6.2. Conducted Emission Measurement

6.2.1.Test Limit

FCC Part 15.107_Class A Limits		
Frequency (MHz)	QP (dBuV)	AV (dBuV)
0.15 - 0.50	79	66
0.50 - 30	73	60
Note 1: The lower limit shall apply at the transition frequencies. Note 2: The limit decreases linearly with the logarithm of the frequency in the range 0.15MHz to 0.5MHz.		

6.2.2.Test Setup

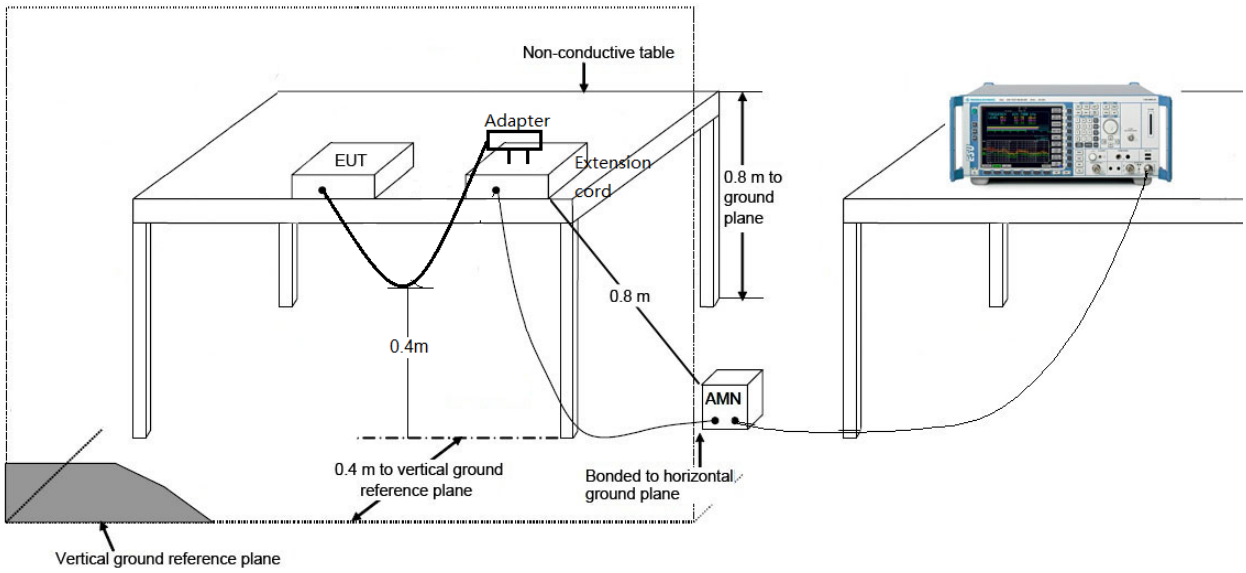

6.2.3.Test Result of Conducted Emissions

Site: SR2	Time: 2020/03/01 - 14:26
Limit: FCC_Part15.107_Class A	Engineer: Liz Yuan
Probe: ENV216_101683_Filter On	Polarity: Line
EUT: HIT Dragonfly Access Point	Power: AC 120V/60Hz
Test Mode 1	

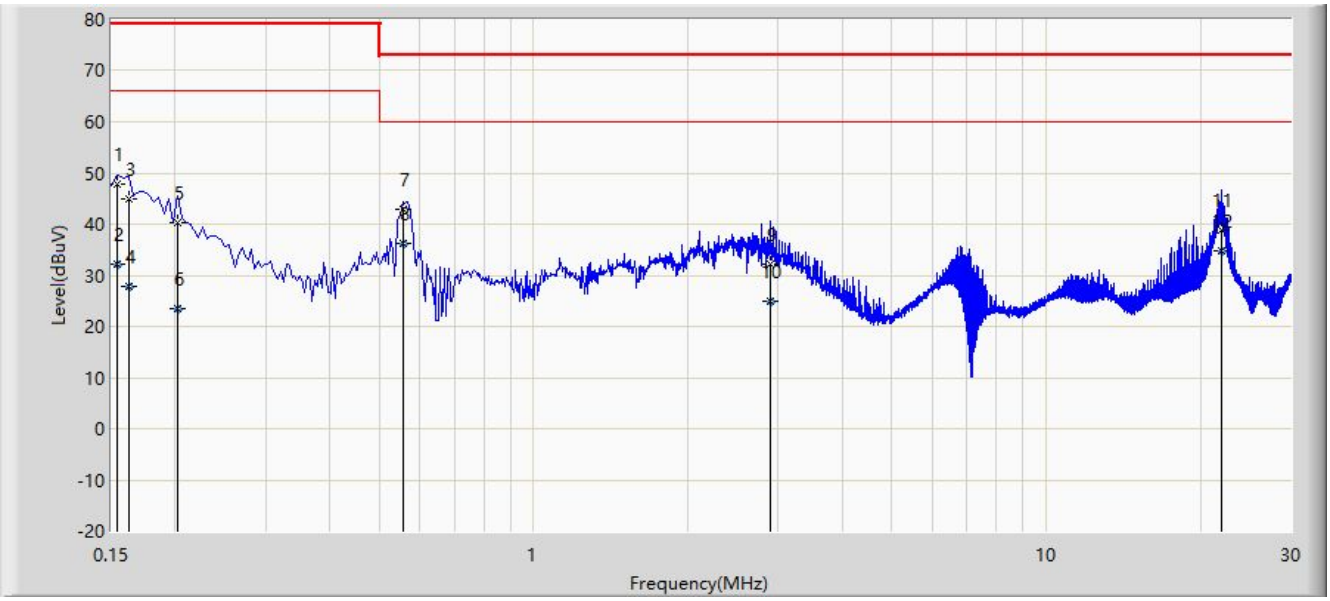

No	Flag	Mark	Frequency (MHz)	Measure Level (dBuV)	Reading Level (dBuV)	Margin (dB)	Limit (dBuV)	Factor (dB)	Type
1			0.154	47.949	37.209	-31.051	79.000	10.740	QP
2			0.154	32.064	21.324	-33.936	66.000	10.740	AV
3			0.162	44.911	34.814	-34.089	79.000	10.097	QP
4			0.162	27.796	17.699	-38.204	66.000	10.097	AV
5			0.202	40.257	30.264	-38.743	79.000	9.993	QP
6			0.202	23.502	13.509	-42.498	66.000	9.993	AV
7			0.558	42.951	32.814	-30.049	73.000	10.137	QP
8		*	0.558	36.366	26.229	-23.634	60.000	10.137	AV
9			2.898	32.057	22.207	-40.943	73.000	9.850	QP
10			2.898	24.910	15.060	-35.090	60.000	9.850	AV
11			21.962	38.921	28.749	-34.079	73.000	10.172	QP
12			21.962	34.653	24.481	-25.347	60.000	10.172	AV

Note: Measure Level (dBμV) = Reading Level (dBμV) + Factor (dB)

Factor (dB) = Cable Loss (dB) + LISN Factor (dB)

Site: SR2	Time: 2020/03/01 - 14:30
Limit: FCC_Part15.107_Class A	Engineer: Liz Yuan
Probe: ENV216_101683_Filter On	Polarity: Neutral
EUT: HIT Dragonfly Access Point	Power: AC 120V/60Hz
Test Mode 1	

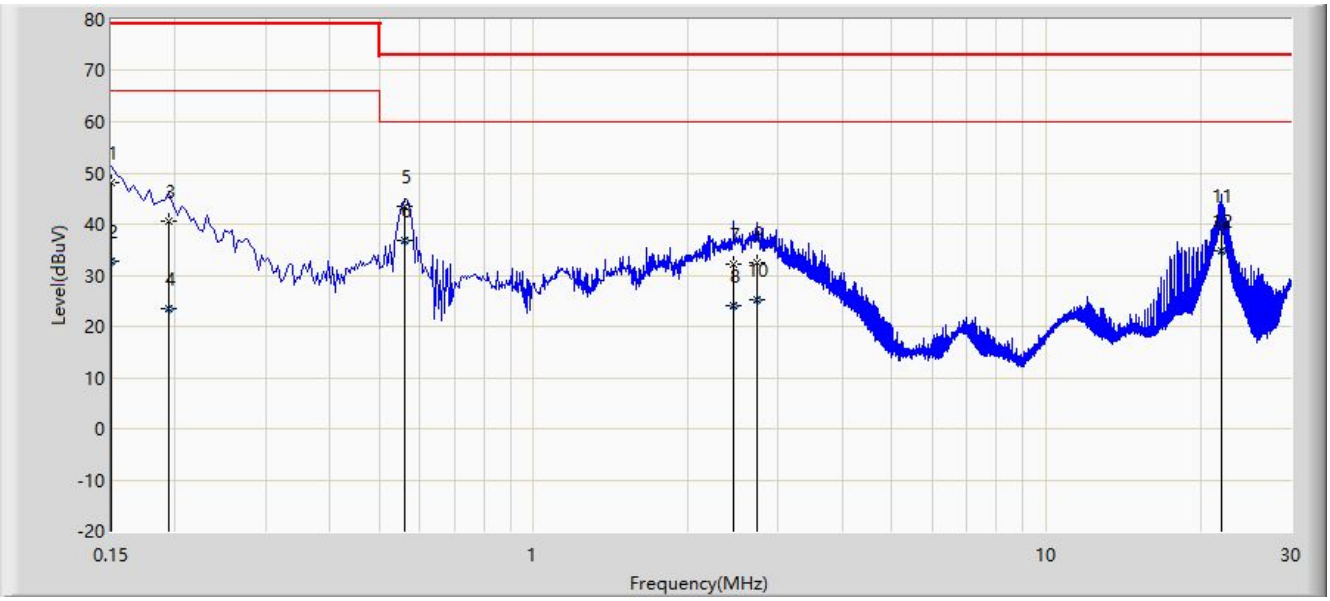

No	Flag	Mark	Frequency (MHz)	Measure Level (dBuV)	Reading Level (dBuV)	Margin (dB)	Limit (dBuV)	Factor (dB)	Type
1			0.150	48.005	36.863	-30.995	79.000	11.142	QP
2			0.150	32.717	21.575	-33.283	66.000	11.142	AV
3			0.194	40.660	30.639	-38.340	79.000	10.021	QP
4			0.194	23.515	13.494	-42.485	66.000	10.021	AV
5			0.562	43.543	33.391	-29.457	73.000	10.152	QP
6		*	0.562	36.956	26.804	-23.044	60.000	10.152	AV
7			2.458	32.095	22.234	-40.905	73.000	9.861	QP
8			2.458	24.007	14.146	-35.993	60.000	9.861	AV
9			2.722	32.429	22.575	-40.571	73.000	9.854	QP
10			2.722	25.117	15.263	-34.883	60.000	9.854	AV
11			22.038	39.584	29.367	-33.416	73.000	10.218	QP
12			22.038	34.781	24.564	-25.219	60.000	10.218	AV

Note: Measure Level (dBμV) = Reading Level (dBμV) + Factor (dB)

Factor (dB) = Cable Loss (dB) + LISN Factor (dB)

6.3. Radiated Emission Measurement

6.3.1.Test Limit

FCC Part 15.109_Class A Limits		
Frequency (MHz)	Field Strength (dBμV/m)	Measured Distance (Meters)
30 - 88	49	3
88 - 216	53.5	3
216 - 960	56.4	3
Above 960	59.5	3
Note 1: The lower limit shall apply at the transition frequency. Note 2: Distance refers to the distance in meters between the measuring instrument antenna and the closed point of any part of the device or system. Note 3: E field strength (dBμV/m) = 20 log E field strength (uV/m)		

6.3.2.Test Setup

30MHz ~ 1GHz Test Setup:

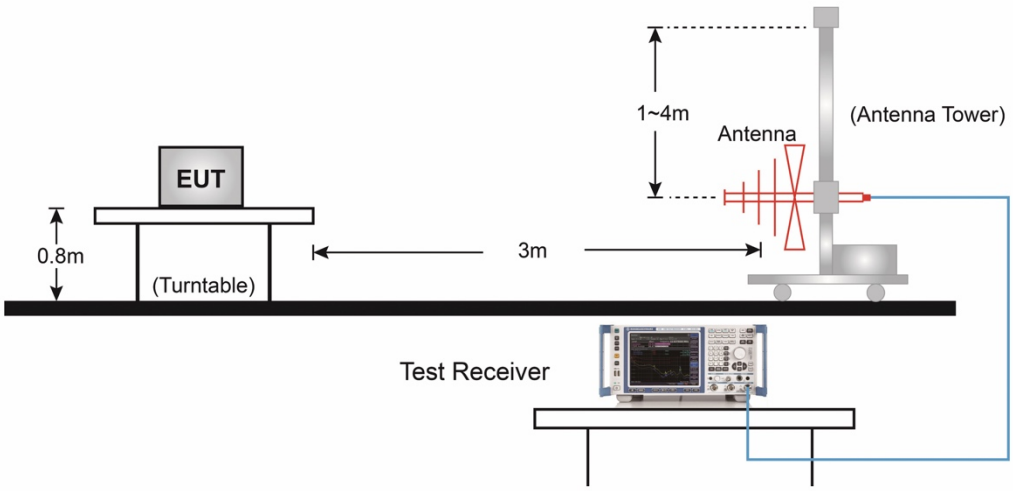

1GHz ~18GHz Test Setup:

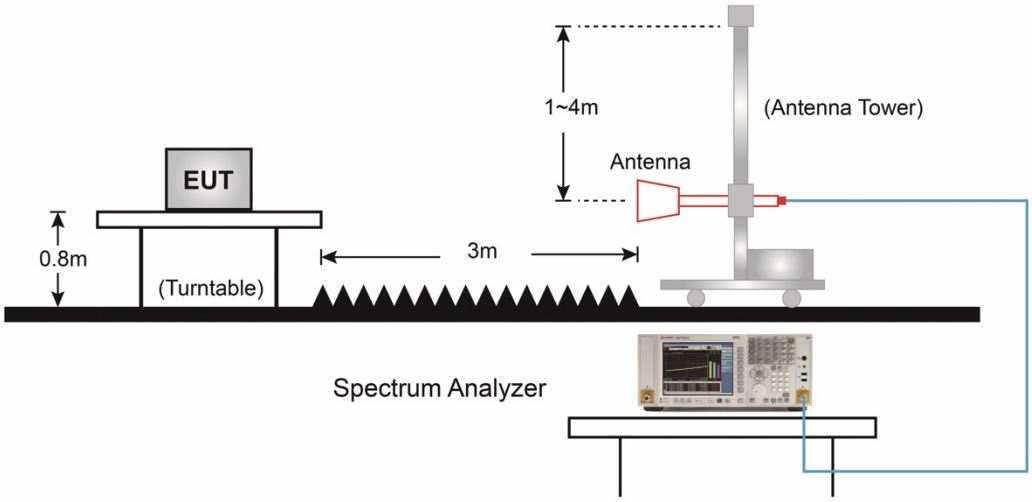

6.3.3.Test Result of Radiated Emissions

Site: AC1	Time: 2020/03/02 - 21:47
Limit: FCC_Part15.109_RE(3m)_Class A	Engineer: Milo Li
Probe: AC1_VULB 9168 _20-2000MHz	Polarity: Horizontal
EUT: HIT Dragonfly Access Point	Power: AC 120V/60Hz
Test Mode 1	

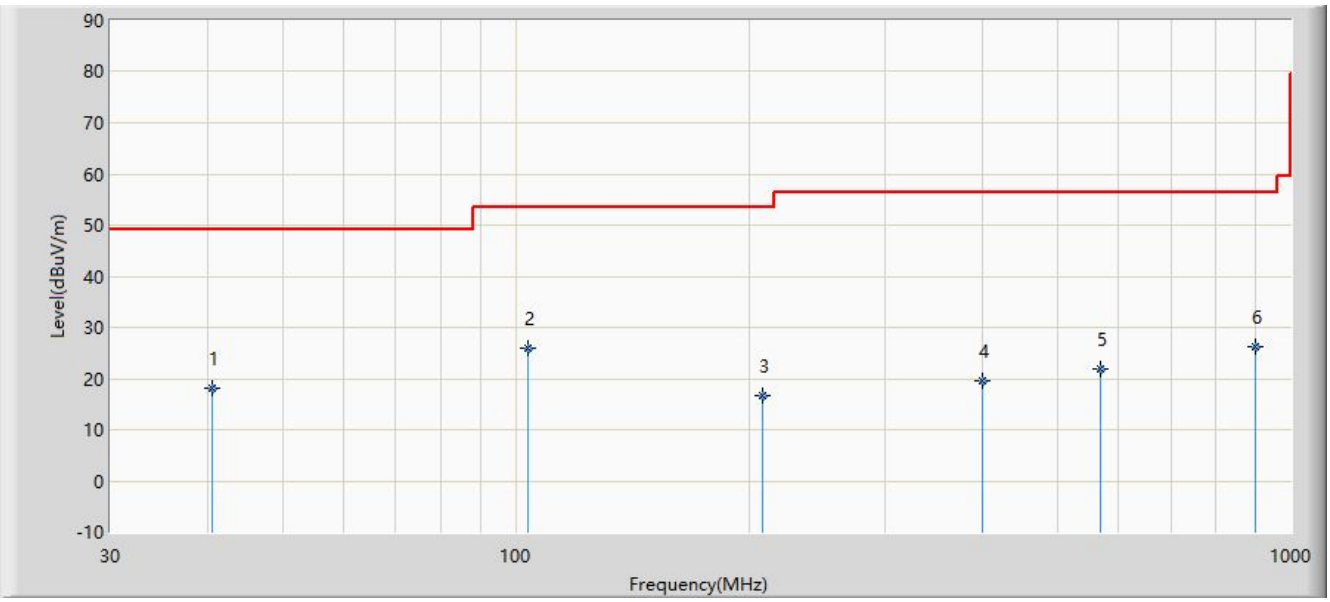

No	Flag	Mark	Frequency (MHz)	Measure Level (dBuV/m)	Reading Level (dBuV)	Margin (dB)	Limit (dBuV/m)	Factor (dB)	Type
1			40.670	18.192	3.527	-30.808	49.000	14.665	QP
2		*	103.720	25.867	14.185	-27.633	53.500	11.682	QP
3			208.480	16.582	4.843	-36.918	53.500	11.739	QP
4			400.540	19.704	2.577	-36.696	56.400	17.128	QP
5			567.865	21.945	1.492	-34.455	56.400	20.453	QP
6			901.060	26.281	1.119	-30.119	56.400	25.161	QP

Note: Measure Level (dBμV/m) = Reading Level (dBμV) + Factor (dB)

Factor (dB) = Cable Loss (dB) + Antenna Factor (dB/m)

Site: AC1	Time: 2020/03/02 - 21:48
Limit: FCC_Part15.109_RE(3m)_Class A	Engineer: Milo Li
Probe: AC1_VULB 9168 _20-2000MHz	Polarity: Vertical
EUT: HIT Dragonfly Access Point	Power: AC 120V/60Hz
Test Mode 1	

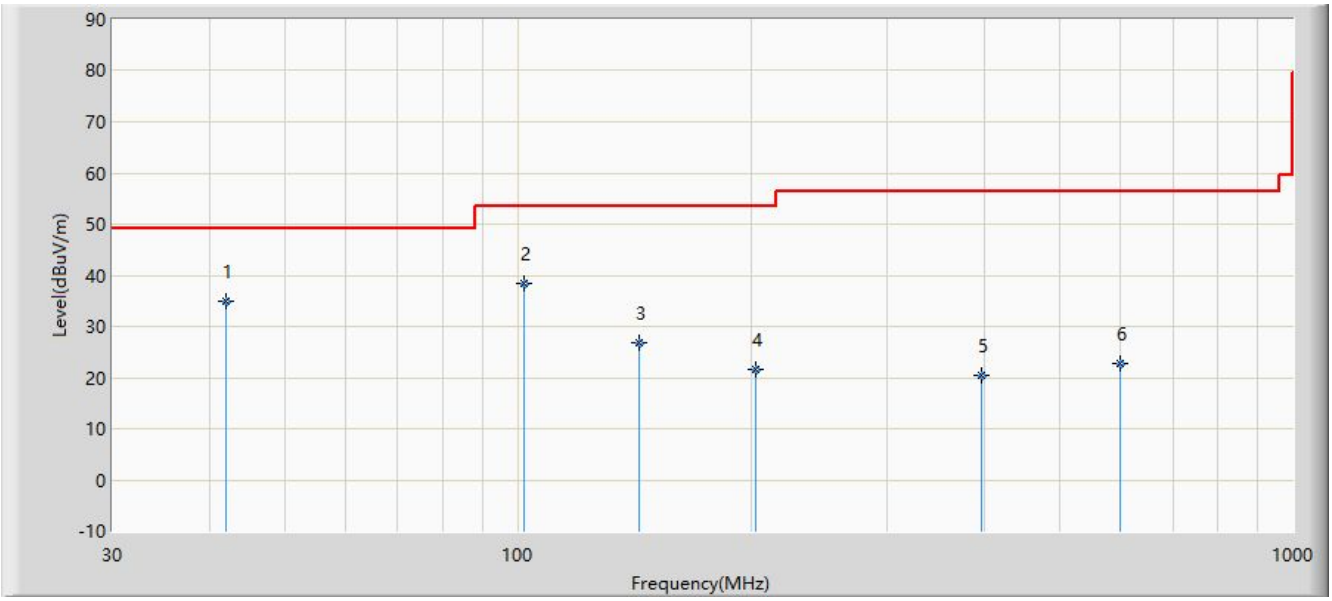

No	Flag	Mark	Frequency (MHz)	Measure Level (dBuV/m)	Reading Level (dBuV)	Margin (dB)	Limit (dBuV/m)	Factor (dB)	Type
1		*	42.125	34.883	20.295	-14.117	49.000	14.588	QP
2			101.780	38.547	27.076	-14.953	53.500	11.471	QP
3			143.490	26.945	11.825	-26.555	53.500	15.120	QP
4			203.145	21.532	9.909	-31.968	53.500	11.622	QP
5			396.660	20.517	3.498	-35.883	56.400	17.020	QP
6			598.905	22.697	1.521	-33.703	56.400	21.176	QP

Note: Measure Level (dBμV/m) = Reading Level (dBμV) + Factor (dB)

Factor (dB) = Cable Loss (dB) + Antenna Factor (dB/m)

Site: AC1	Time: 2020/03/02 - 21:46
Limit: FCC_Part15.109_RE(3m)_Class A	Engineer: Milo Li
Probe: AC1_BBHA9120D_1-18GHz	Polarity: Horizontal
EUT: HIT Dragonfly Access Point	Power: AC 120V/60Hz
Test Mode 1	

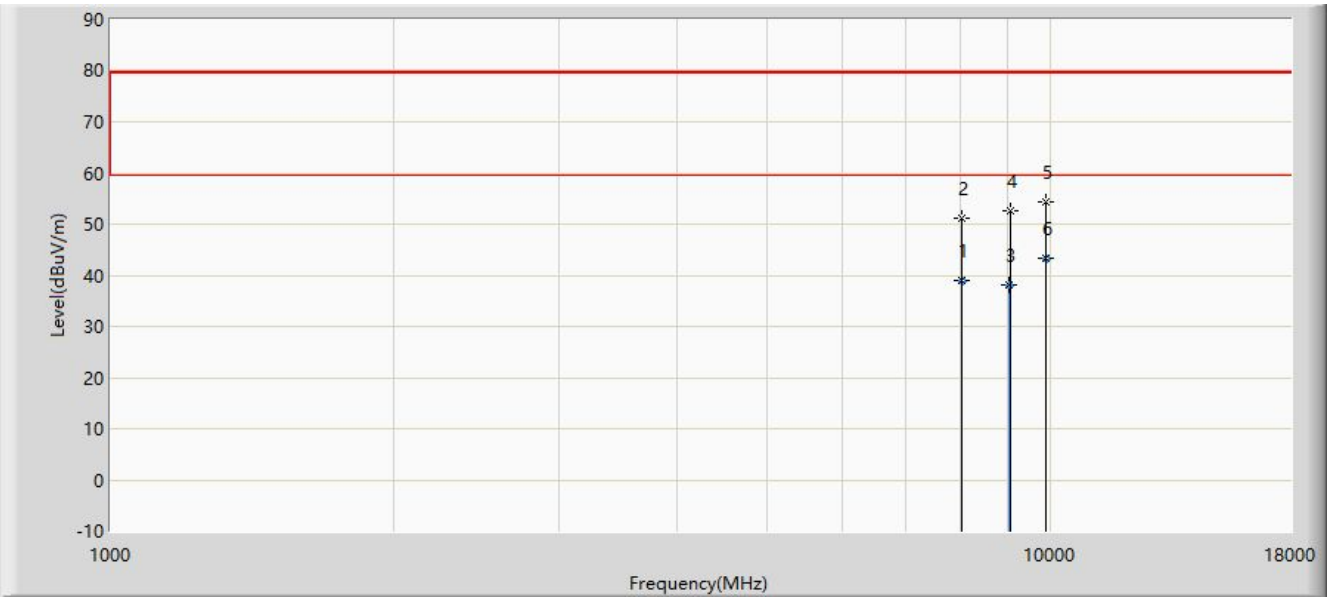

No	Flag	Mark	Frequency (MHz)	Measure Level (dBuV/m)	Reading Level (dBuV)	Margin (dB)	Limit (dBuV/m)	Factor (dB)	Type
1			8047.210	38.928	24.147	-20.572	59.500	14.780	AV
2			8055.000	51.182	36.442	-28.318	79.500	14.740	PK
3			9031.240	38.108	21.120	-21.392	59.500	16.989	AV
4			9049.500	52.719	35.692	-26.781	79.500	17.027	PK
5			9865.500	54.251	34.847	-25.249	79.500	19.405	PK
6		*	9873.350	43.386	24.020	-16.114	59.500	19.366	AV

Note: Measure Level (dBμV/m) = Reading Level (dBμV) + Factor (dB)

Factor (dB) = Cable Loss (dB) + Antenna Factor (dB/m) - Pre_Amplifier Gain (dB)

Site: AC1	Time: 2020/03/02 - 21:47
Limit: FCC_Part15.109_RE(3m)_Class A	Engineer: Milo Li
Probe: AC1_BBHA9120D_1-18GHz	Polarity: Vertical
EUT: HIT Dragonfly Access Point	Power: AC 120V/60Hz
Test Mode 1	

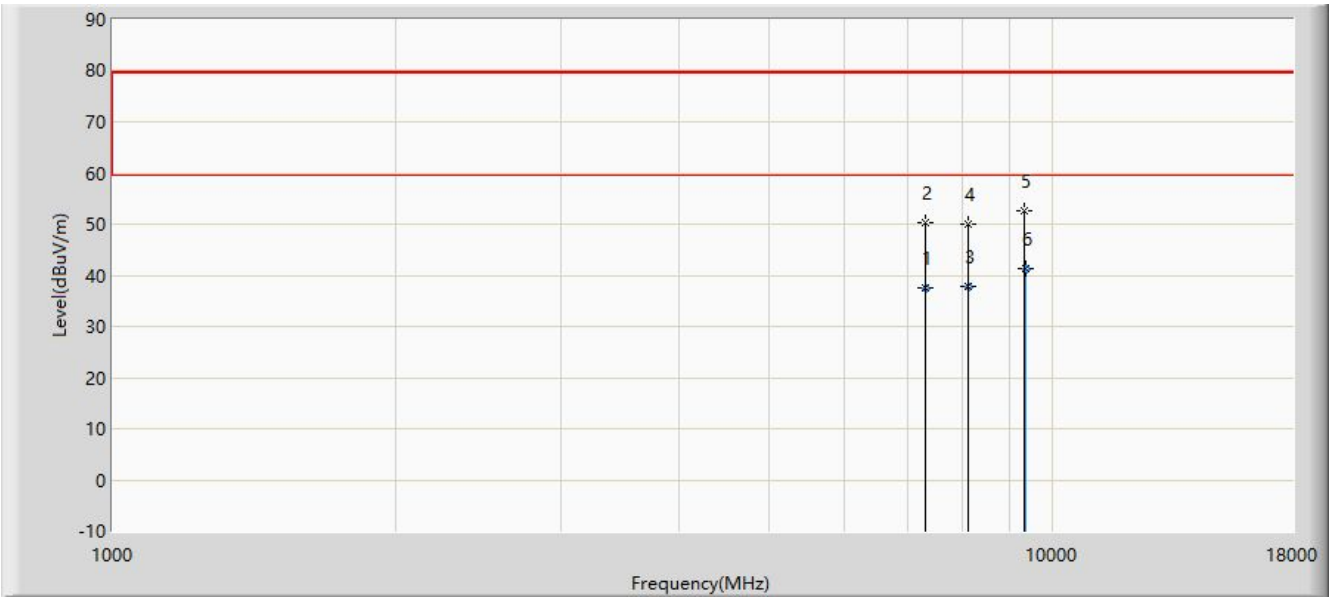

No	Flag	Mark	Frequency (MHz)	Measure Level (dBuV/m)	Reading Level (dBuV)	Margin (dB)	Limit (dBuV/m)	Factor (dB)	Type
1			7320.170	37.547	24.120	-21.953	59.500	13.426	AV
2			7332.500	50.226	36.687	-29.274	79.500	13.540	PK
3			8121.140	37.709	23.140	-21.791	59.500	14.569	AV
4			8131.500	50.088	35.536	-29.412	79.500	14.552	PK
5			9338.500	52.592	34.161	-26.908	79.500	18.431	PK
6		*	9346.210	41.347	22.845	-18.153	59.500	18.501	AV

Note: Measure Level (dBμV/m) = Reading Level (dBμV) + Factor (dB)

Factor (dB) = Cable Loss (dB) + Antenna Factor (dB/m) - Pre_Amplifier Gain (dB)

7. CONCLUSION

The data collected relate only the item(s) tested and show that the unit has been tested to comply with the requirements specified in the FCC Rules.

The End

Appendix A - Test Setup Photograph

Refer to “2201RSU009-UT” file.

Appendix B - EUT Photograph

Refer to “2201RSU009-UE” file.