HIRSCHMANN IT

A BELDEN BRAND

User Manual

Installation

Industrial Wireless Access Point/Client

DAP847

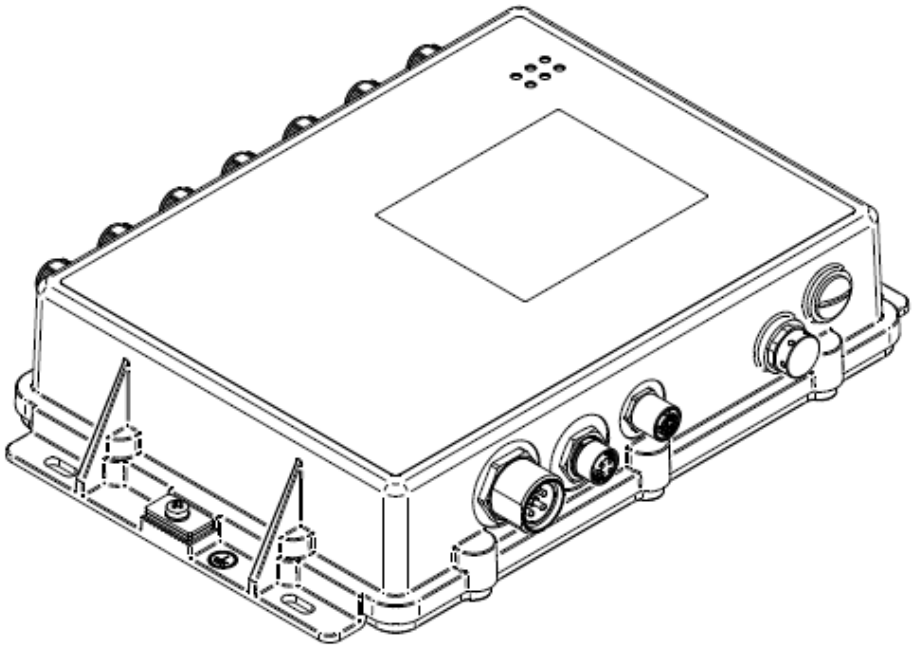

The naming of copyrighted trademarks in this manual, even when not specially indicated, should not be taken to mean that these names may be considered as free in the sense of the trademark and tradename protection law and hence that they may be freely used to anyone.

© 2023 Belden Singapore Pte Ltd

Manual and software are protected by copyright. All rights reserved. The copying, reproduction, translation, conversion into any electronic medium or machine scannable form is not permitted, either in whole or in part. An exception is the preparation of a backup copy of the software for your own use.

The performance features described here are binding only if they have been expressly agreed when the contract was made. This document was produced by Belden according to the best of the company's knowledge. Belden reserves the right to change the contents of this document without prior notice. Belden can give no guarantee in respect of the correctness or accuracy of the information in this manual.

Belden can accept no responsibility for damages, resulting from the use of network components or the associated operating software. In addition, we refer to the conditions of use specified in the license contract.

You may get the latest version of this manual on the Internet at: https://catalog.belden.com

Contents

Important information **5**

Safety instructions **6**

About this manual **14**

Key **15**

1 Description **16**

1.1 General device description 16

1.2 Device name and product code 17

1.3 Device view 18

1.4 Power supply 19

1.4.1 DC Power supply 19

1.4.2 Power supply through PoE 19

1.5 Ethernet ports 20

1.5.1 10/100/1000/2500 Mbit/s PoE PD port 20

1.5.2 Pin assignments 20

1.6 Antenna connections 21

1.7 Display elements 22

1.7.1 Device state 22

1.8 Management interfaces 23

1.8.1 Reset button 23

1.8.2 V.24 interface (external management) 24

2 Installation **25**

2.1 Checking the package contents 26

2.2 Installing and grounding the device 27

2.2.1 Installing the device onto or on a flat surface 27

2.2.2 Grounding the device 27

2.3 Installing the antennas 29

2.4 Connecting the power supply 33

2.4.1 Supply voltage (24 V DC / 110 V DC) 33

2.4.2 Supply voltage with PoE 34

2.5 Operating the device 35

2.6 Connecting data cable 36

3 First login (Password change) 37
3.1 First login on DAP847-XXA 37
3.2 First login on DAP847-XXC 40
4 Defining WLAN basic settings 42
4.1 Defining WLAN basic settings on DAP847-XXA 42
4.2 Defining WLAN basic settings on DAP847-XXC 42
5 Maintenance and service 43
6 Disassembly 44
7 Technical data 45
7.1 General technical data 45
7.2 Dimension drawings 46
7.3 WLAN module specifications 47
7.3.1 Radio technology 47
7.3.2 Roaming 47
7.3.3 Receiving sensitivity, and data rate of the WLAN 48
7.4 EMC 49
7.5 Immunity 50
7.6 Network range 51
7.7 Power consumption/power output 52
8 Scope of delivery, order number, and accessories 53
9 Underlying technical standards 55
A Further support 57

Important information

Note: Read these instructions carefully, and familiarize yourself with the device before trying to install, operate, or maintain it. The following notes may appear throughout this documentation or on the device. These notes warn of potential hazards or call attention to information that clarifies or simplifies a procedure.

Symbol explanation

This is a general warning symbol. This symbol alerts you to potential personal injury hazards. Observe all safety notes that follow this symbol to avoid possible injury or death.

If this symbol is displayed in addition to a safety instruction of the type “Danger” or “Warning”, it means that there is a danger of electric shock and failure to observe the instructions will inevitably result in injury.

This symbol indicates the danger of hot surfaces on the device. In connection with safety instructions, non-observance of the instructions will inevitably result in injuries.

DANGER

DANGER draws attention to an immediately dangerous situation, which will **inevitably** result in a serious or fatal accident if not observed.

WARNING

WARNING indicates a potentially hazardous situation which, if not avoided, **could** result in death or serious injury.

CAUTION

CAUTION indicates a possible danger which, if not avoided, **may** result in minor injuries.

NOTICE

NOTICE provides information about procedures that do not involve the risk of injury.

Safety instructions

⚠ WARNING

UNCONTROLLED MACHINE ACTIONS
ACTIONS DES MACHINES INCONTRÔLÉES

To avoid uncontrolled machine actions caused by data loss, configure all the data transmission devices individually.
Pour éviter les actions des machines incontrôlées causées par la perte de données, configurez individuellement tous les dispositifs de transmission de données.

Before you start any machine, which is controlled via data transmission, be sure to complete the configuration of all data transmission devices.
Avant de démarrer une machine qui est contrôlée via une transmission de données, assurez-vous de terminer la configuration de tous les dispositifs de transmission de données.

Failure to follow this instruction can result in death, serious injury, or device damage.
Le non-respect de cette instruction peut entraîner la mort, des blessures graves ou des dommages matériels.

General safety instructions

You operate this device with electricity. Improper usage of the device entails the risk of physical injury or significant property damage. The correct and safe operation of this device depends on correct handling during transportation, correct storage and installation, and careful operation and maintenance procedures.

- ☐ Before connecting any cable, read this document, and the safety instructions and warnings.
- ☐ Operate the device with undamaged components exclusively.
- ☐ The device is free of any service components. In case of a damaged or malfunctioning device, turn off the supply voltage and return the device to Hirschmann IT for inspection.

Certified usage

- ☐ Use the product only for the application cases described in the Hirschmann IT product information, including this manual.
- ☐ Operate the product only according to the technical specifications. See “Technical data” on page 45.
- ☐ Connect to the product only components suitable for the requirements of the specific application case.

Requirements for connecting electrical wires

Before connecting the electrical wires, **always** verify that the requirements listed are complied with.

The following requirements apply without restrictions:
▶ The electrical wires are voltage-free. ▶ The cables used are permitted for the temperature range of the application case.

Requirements for connecting the supply voltage

Before connecting the supply voltage, **always** verify that the requirements listed are complied with.

All variants All of the following requirements are complied with:

The following requirements apply without restrictions:
▶ The supply voltage corresponds to the voltage specified on the type plate of the device. ▶ The power supply conforms to overvoltage category I or II. ▶ The power supply has an easily accessible disconnecting device (for example a switch or a plug). This disconnecting device is clearly identified. So, in the case of an emergency, it is clear which disconnecting device belongs to which power supply cable. ▶ The cross-section of the ground conductor is the same size as or bigger than the cross-section of the power supply cables. ▶ The power supply cable is suitable for the voltage, the current and the physical load.

Installation site requirements

“Equipment is intended for installation in Restricted Access Area.”

Restricted access location:

- ▶ The location is outside the operator access area.
- ▶ The location is accessible to the service personnel even when the device is switched on.

- ☐ During the installation, make sure that you adhere to the regulations of the country in which you are operating the device.
- ☐ In ambient temperature under -10 °C (+14 °F), use the wiring suitable for minimum temperatures.

Installation

Applies to device variants featuring supply voltage (24 V DC / 110 V DC) that comply with all of the following requirements:

- ☐ You connect the device to a power supply that complies with the requirements for a safety extra-low voltage (SELV) according to IEC 60950-1 or ES1 according to IEC/EN 62368-1 and with the overvoltage category II (OVC II).
- ☐ You connect the device supply via Power over Ethernet (PoE), the circuit classification ID 1 according to IEC/EN 62368-1, Table 14 applies (max. transient voltage 1500 V, 10/700 µs).
- ☐ The device has been approved for outdoor installation in a pollution degree 2 environment.
- ☐ Observe the mounting instructions, see “Installing the antennas” on page 29.

Device casing

Only technicians authorized by the manufacturer are permitted to open the casing.

- ☐ Never insert pointed objects (narrow screwdrivers, wires, etc.) into the device or into the connection terminals for electric conductors. Do not touch the connection terminals.
- ☐ At ambient air temperatures > +60 °C (+140 °F): The surfaces of the device housing may become hot. Avoid touching the device while it is operating.

Equipment usage

Only instructed or skilled person are allowed to use the equipment (no ordinary person allowed).

Qualification requirements for personnel

Only allow qualified personnel to work on the device.
Qualified personnel have the following characteristics:

- ▶ Qualified personnel are properly trained. Training as well as practical knowledge and experience make up their qualifications. This is the prerequisite for grounding and labeling circuits, devices, and systems in accordance with current standards in safety technology.
- ▶ Qualified personnel are aware of the dangers that exist in their work.
- ▶ Qualified personnel are familiar with appropriate measures against these hazards in order to reduce the risk for themselves and others.
- ▶ Qualified personnel receive training on a regular basis.

National and international safety regulations

Verify that the electrical installation meets local or nationally applicable safety regulations.

Grounding the device

Grounding the device is by means of a separate protective ground connection on the device.

- ☐ Ground the device before connecting any other cables.
- ☐ Disconnect the grounding only after disconnecting all other cables.

The overall shield of a connected shielded twisted pair cable is connected to the ground connection on the metal housing as a conductor.

Lightning protection and surge protection

Applies exclusively to devices and antennas installed outdoors:

- ▶ The installation of the device must be carried out by a lightning protection professional in accordance with valid standards (such as IEC 62305 / DIN EN 62305 (VDE 0185-305), and in accordance with the lightning protection procedures recognized and proven for the application and the environment.
- ☐ Refer to the information in the “WLAN Outdoor Guide” on “Lightning protection and surge protection”.
- ☐ The manual is available for download on the internet: https://www.doc.hirschmann.com.
- ☐ Ensure that the lightning protection professional installs lightning protection devices (for example lightning conductors) to protect antennas installed outdoors.
- ☐ Ensure that the lightning protection professional takes appropriate lightning protection measures that mitigate the effects of lightning strikes.

CE marking

The labeled devices comply with the regulations contained in the following European directive(s):

- **2011/65/EU and (EU)2015/863 (RoHS)**
  Directive of the European Parliament and of the Council on the restriction of the use of certain hazardous substances in electrical and electronic equipment.
- **2014/53/EU**
  Directive of the European Parliament and of the Council on the harmonization of the laws of the Member States relating to the making available on the market of radio equipment.

This product may be operated in all EU (European Union) countries under the condition that it has been configured correctly.

In accordance with the above-named EU directive(s), the EU conformity declaration will be available to the relevant authorities at the following address:

Belden Deutschland GmbH
Im Gewerbepark 2
58579 Schalksmühle
Germany

You find the EU conformity declaration as PDF file for downloading on the Internet at:
https://catalog.belden.com/index.cfm?event=browse&c=Category_815381

The product can be used in in industrial areas.

Notes for countries with the following country codes:

AT	BE	BG	CH	CY	CZ	DE	DK	EE
EL	ES	FI	FR	HR	HU	IE	IT	LI
LT	LU	LV	MT	NL	NO	PL	PT	RO
RS	SE	SI	SK	TR				

- The RED compliance requires compliant operation of the device in the 5 GHz band channels. Compliant operation of the device is achieved by an unchangeable determination of the country setting.

UKCA marking

The labeled devices comply with the following UK regulations:

- S.I. 2012 No. 3032 Restriction of the Use of Certain Hazardous Substances in Electrical and Electronical Equipment Regulations
- S.I. 2017 No. 1206 Radio Equipment Regulations

The UKCA conformity declaration will be available to the relevant authorities at the following address:
Belden UK Ltd.
1 The Technology Centre, Station Road
Framlingham, IP13 9EZ, United Kingdom

You find the UKCA conformity declaration as PDF file for downloading on the Internet at:
https://catalog.belden.com/index.cfm?event=browse&c=Category_815381

Notes for the United Kingdom (UK):

UK	NI							

- The Radio Equipment Regulations compliance requires compliant operation of the device in the 5 GHz band channels. Compliant operation of the device is achieved by an unchangeable determination of the country setting.

LED or Laser Components

LED or LASER components according to IEC 60825-1 (2014):
CLASS 1 LASER PRODUCT
CLASS 1 LED PRODUCT

FCC note

Supplier's Declaration of Conformity
47 CFR § 2.1077 Compliance Information

DAP847

U.S. Contact Information
Beldon Inc.
1 N. Brentwood Blvd. 15th Floor
St. Louis, Missouri 63105, United States
Phone: 314.854.8000

This device complies with part 15 of the FCC rules.
Operation is subject to the following two conditions:

- This device may not cause harmful interference, and
- This device must accept any interference received, including interference that may cause undesired operation.

This equipment has been tested and found to comply with the limits for a Class A digital device, pursuant to part 15 of the FCC Rules. These limits are designed to provide reasonable protection against harmful interference when the equipment is operated in a commercial environment. This equipment generates, uses, and can radiate radio frequency energy and, if not installed and used in accordance with the instruction manual, may cause harmful interference to radio communications. Operation of this equipment in a residential area is likely to cause harmful interference in which case the user will be required to correct the interference at his own expense.

Changes or modifications not expressly approved by the holder of the certificate could void the user’s authority to operate this equipment.

RF exposure warning

- This equipment complies with FCC and CE radiation exposure limits set forth for an uncontrolled environment.
- This product may not be collocated or operated in conjunction with any other antenna or transmitter.
- Confirm that this equipment is installed and operated in accordance with the provided instructions. Make sure that the antenna(s) used for this transmitter is installed at a distance of at least 33 cm from every person and must not be collocated or operating in conjunction with any other antenna or transmitter.

Recycling note

After usage, this device must be disposed of properly as electronic waste, in

accordance with the current disposal regulations of your county, state, and country.

About this manual

The “Installation” user manual contains a device description, safety instructions, a description of the display, and the other information that you need to install the device.
Documentation mentioned in the “User Manual Installation” that is not supplied with your device as a printout can be found for downloading on the Internet at: https://catalog.belden.com.

Key

The symbols used in this manual have the following meanings:

▶	List
□	Work step
■	Subheading
Link	Cross-reference with link
Note:	A note emphasizes a significant fact or draws your attention

1 Description

1.1 General device description

We provide industrial grade wireless access solutions for verticals such as rail transit, process automation, discrete automation, and energy, which include access points (APs) and client terminals. Both AP and client adopt the latest Wi Fi 6 (IEEE 802.11ax) technologies.

In rail transit scenarios, the AP is installed on the trackside and performs train to ground communication with clients installed on board, transmitting train control signals and other data signals.

In verticals such as process automation, discrete automation, and energy, the AP is installed in factory workshops, logistics warehouses, cranes in the metallurgical industry, ports and docks, and so on.

This device can be powered by PoE as PD (powered device), without fans inside, and supports IP67 protection level.

In addition to meeting the EN 50155 standard, this device conforms to other relevant standards, guaranteeing reliable performance and adhere to safety regulation.

1.2 Device name and product code

The device name corresponds to the product code. The product code is made up of characteristics with defined positions. The characteristic values stand for specific product properties.

Product Number	Product Code	Product Description
9AA 101 001	DAP847-RWAPKT899THH	Dragonfly Outdoor Wi-Fi 6 (802.11ax) Access Point, PoE PD only, Extended Temp
9AA 101 002	DAP847-RWAPKT899EHH	Dragonfly Outdoor Wi-Fi 6 (802.11ax) Access Point, PoE PD only, Extended Temp with Conf. Coating
9AA 101 003	DAP847-RWAKKT899THH	Dragonfly Outdoor Wi-Fi 6 (802.11ax) Access Point, PoE PD and 24 V / 110 V DC, Extended Temp
9AA 101 004	DAP847-RWAKKT899EHH	Dragonfly Outdoor Wi-Fi 6 (802.11ax) Access Point, PoE PD and 24 V / 110 V DC, Extended Temp with Conf. Coating
9AA 101 005	DAP847-RWCPKT899THH	Dragonfly Outdoor Wi-Fi 6 (802.11ax) Client, PoE PD only Extended Temp
9AA 101 006	DAP847-RWCPKT899EHH	Dragonfly Outdoor Wi-Fi 6 (802.11ax) Client, PoE PD only Extended Temp with Conf. Coating
9AA 101 007	DAP847-RWCKKT899THH	Dragonfly Outdoor Wi-Fi 6 (802.11ax) Client, PoE PD and 24 V / 110 V DC, Extended Temp
9AA 101 008	DAP847-RWCKKT899EHH	Dragonfly Outdoor Wi-Fi 6 (802.11ax) Client, PoE PD and 24 V / 110 V DC, Extended Temp with Conf. Coating

Table 1: Device name, product code and description

Product Code	Explanation
Device	DAP847
RW	RW
A	AP
C	Client
P	PoE only
K	24V-110V DC and PoE
K	Approval EN 50121-4, EN 50155
T8	100/1000/2500 Mbit/s M12
99	Not assembled
T	Extended, -40 to +70 ℃
E	Extended, -40 to +70 ℃ with conformal coating
HH	Reserved

Table 2: Product code explanation

Note: In this manual, DAP847-XXA indicates DAP847 Access Point and DAP847-XXC indicates DAP847 Client.

1.3 Device view

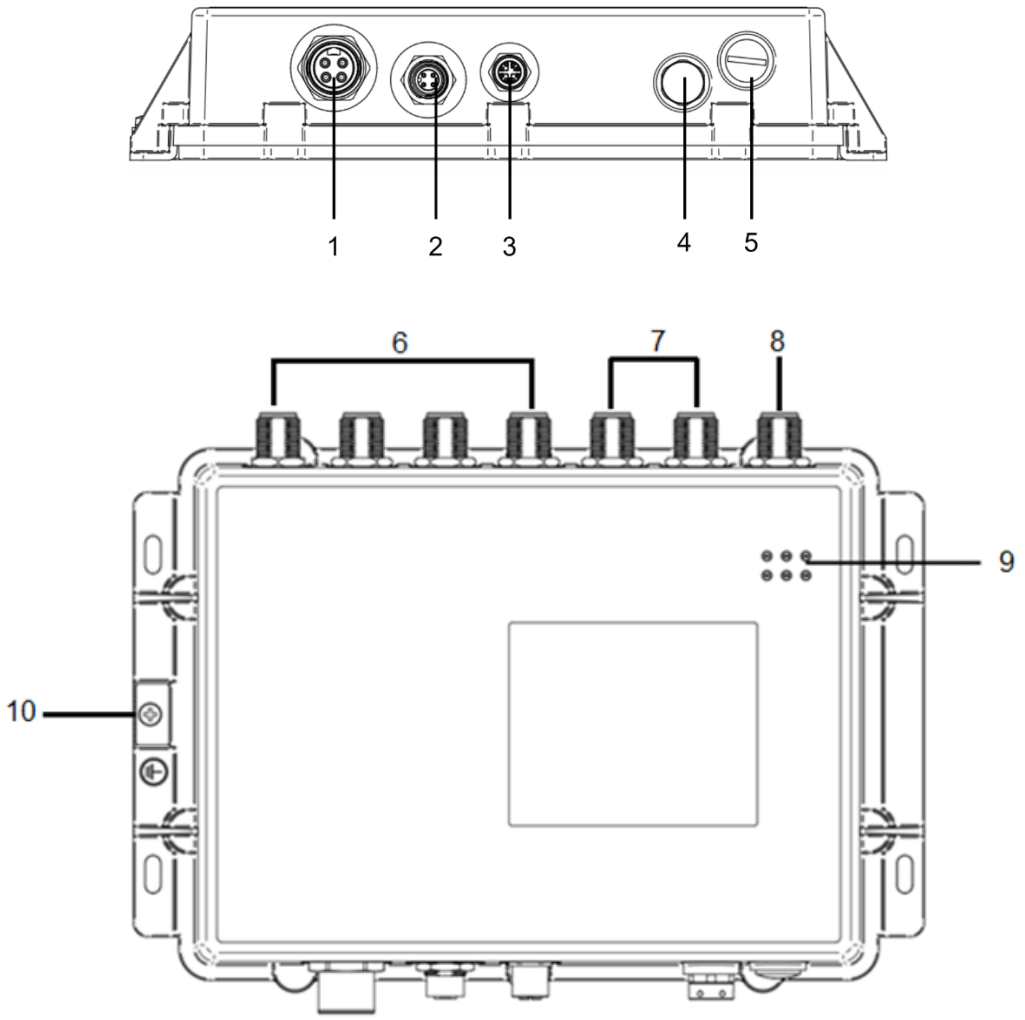

Figure 1: Device View

1	Supply voltage connection	24V/110V DC, 4-pin, 7/8" socket
2	V. 24	4-pin, “A”-coded M12 socket
3	Ethernet port (PoE)	8-pin, "X"- coded M12 socket for 10/100/1000/2500 Mbit/s twisted pair connections. This port supports POE+. IEEE 802.3at/bt compliant.
4	Air valve	Do not open
5	Reset button	
6	ANT1~ANT4 port	Used to connect WiFi 5G antennas
7	ANT5, ANT6 port	Used to connect WiFi 2.4G antennas
8	ANT7 port	Used for scanning
9	LED display element	
10	Connection for protective ground	

1.4 Power supply

The device supports the DC input power supply and the power supply through PoE.

1.4.1 DC Power supply

The device supports the DC input power supply. One typical voltage is 24 V DC, and the other typical voltage is 110 V DC.

1.4.2 Power supply through PoE

Your device is a PD (Powered Device). PSE (power sourcing equipment) connected via a twisted pair cable to the PoE PD port serves as the PoE power supply voltage. The PoE power supply means that no separate power supply is required for your device.

1.5 Ethernet ports

You have the option of connecting end devices or other segments to the ports of the device via twisted pair cables.

You can find the information on the pin assignments for making patch cables in the section Pin assignments on page 20.

1.5.1 10/100/1000/2500 Mbit/s PoE PD port

This port is an 8-pin, "X"- coded M12 socket. The 10/100/1000/2500 Mbit/s PoE port allows you to connect network components.

This port supports:

- Autocrossing (if auto-negotiation is activated)
- Auto-negotiation
- Auto-polarity
- 10 Mbit/s half-duplex mode, 10 Mbit/s full-duplex mode
- 100 Mbit/s half-duplex mode, 100 Mbit/s full-duplex mode
- 1000 Mbit/s full-duplex mode
- 2500 Mbit/s full-duplex mode
- Delivery state: Auto-negotiation activated

The socket housing is electrically connected with the device housing.

The PoE power is supplied via the wire pairs transmitting the signal (phantom voltage).

1.5.2 Pin assignments

This table shows the pin assignments of the 10/100/1000/2500 Mbit/s POE PD port.

Connector	Pin	Function	PoE			
	1	MDX1+	Negative VPSE	Positive VPSE		
	2	MDX1-	Negative VPSE	Positive VPSE		
	3	MDX0+	Positive VPSE	Negative VPSE		
	4	MDX0-	Positive VPSE	Negative VPSE		
	5	MDX2+			Positive VPSE	Negative VPSE
	6	MDX2-			Positive VPSE	Negative VPSE
	7	MDX3-			Negative VPSE	Positive VPSE
	8	MDX3+			Negative VPSE	Positive VPSE

Table 3: Pin assignments of the 10/100/1000/2500 Mbit/s POE PD port

1.6 Antenna connections

The device has connections for external antennas. These connectors are N female sockets. When an antenna port is not used, Hirschmann recommends using an N-Abschl-Wdst. 50 Ohm resistor to avoid suffering from signal interference.
The "Antenna Guide" document provides an overview of the antennas that can be used as well as the suitable antenna accessories.
The manual is available for download on the Internet:
https://catalog.belden.com.

1.7 Display elements

After the supply voltage is set up, the software starts and initializes the device. Afterwards, the device performs a self-test. During this process, various LEDs light up.

1.7.1 Device state

The device is equipped with an LED display that indicates different status with different colors.

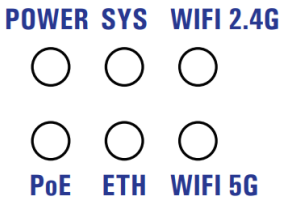

Figure 2: LED display element

LED Element	Color	Activity	Meaning
Power	Off	-	Power is not ready.
	Green	Solid	Supply voltage is active.
PoE	Off	-	PoE is not ready.
	Green	Solid	PoE voltage is active.
SYS	Off	-	Device is not ready.
	Green	Solid	System is powering on or running.
	Green	Blinking	Upgrading or loading SW.
ETH	Off	-	No valid connection.
	Green	Solid	Link is up.
WIFI 2.4G	Off	-	No valid connection.
	Green	Solid	2.4G link is active.
WIFI 5G	Off	-	No valid connection.
	Green	Solid	5G link is active.

Table 4: LED display description

1.8 Management interfaces

1.8.1 Reset button

Prerequisite: Keep the working area dry and clean before a reset is carried out.

The device has a reset button, which is located behind a screwable IP67 protection cap. The tightening torque is 0.5 Nm to 1.0 Nm (4.42 lb-in to 8.85 lb-in).

Pressing the button for 5 seconds, and the Sys LED lights up, you can set the configuration to the factory settings. The LEDs on the device quickly flash. Once you release the button, the device reboots with restored factory settings.

After pressing the reset button, replace the protection cap. Degrees of protection IP67 are only achieved when the protection cap is closed.

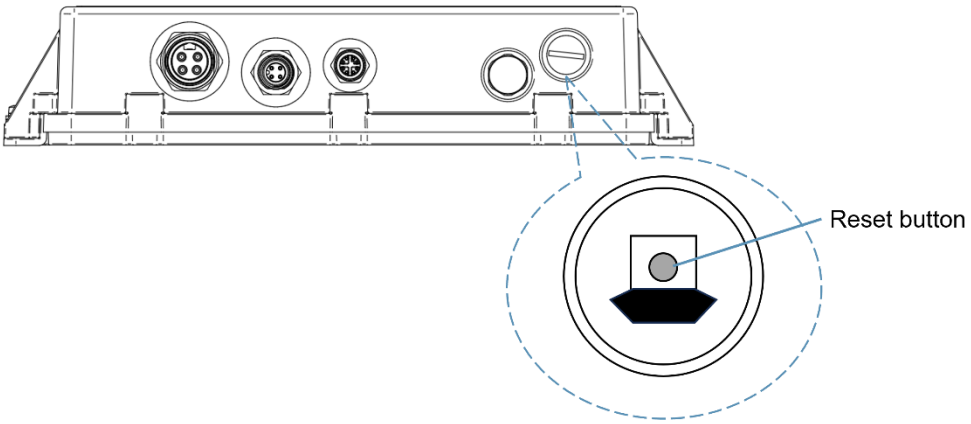

Figure 3: Reset button

1.8.2 V.24 interface (external management)

This interface is a 4-pin, “A”-coded M12 socket.

This interface is serial and enables the local connection of an external management station (VT100 terminal or PC with corresponding terminal emulation). This enables you to set up a connection to the Command Line Interface CLI and to the System Monitor.

VT100 terminal settings	
Speed	115200 Baud
Data	8 bit
Stopbit	1 bit
Handshake	off
Parity	none

The socket housing is electrically connected to the front panel of the device. The V.24 interface is electrically insulated from the supply voltage.

You can use the V.24 interface to connect the device.

Connector	Pin	Function
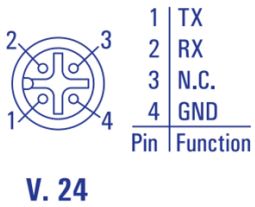	1 TX	Transmit Data
	2 RX.	Receive Data
	3 N.C.	Not used
	4 GND	Ground

The terminal cable is available as an accessory.

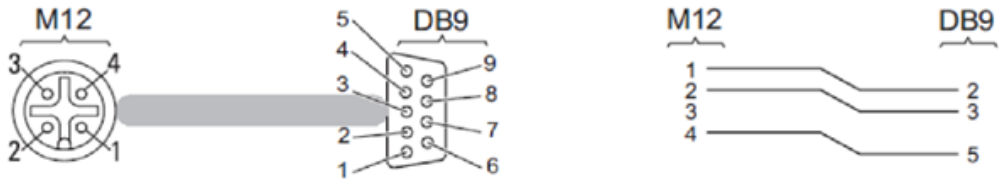

Figure 4: Terminal cable for connecting an external Management Station

2 Installation

⚠ WARNING

ELECTRIC SHOCK

CHOC ÉLECTRIQUE

Exclusively install this device in a restricted access location, to which maintenance staff have exclusive access. Install the device in such a way that it is protected against mechanical forces in the area of the power supply.

Installez exclusivement ce dispositif dans un emplacement à accès restreint, auquel le personnel de maintenance a un accès exclusif. Installez le dispositif de manière à ce qu'il soit protégé contre les forces mécaniques dans la zone d'alimentation électrique.

Failure to follow this instruction can result in death, serious injury or damage of the equipment.

Le non-respect de cette instruction peut entraîner la mort, des blessures graves ou des dommages matériels.

The devices are developed for practical application in a harsh industrial environment. On delivery, the device is ready for operation.

To protect the exposed uninstalled contacts of the components from dirt, connect the individual system components in a dry and clean working area.

The device fulfills the protection class IP67 under the following conditions exclusively:

- All the connectors and cables connected also fulfill protection class IP67.
- All the unused connections and ports are sealed with the appropriate protection screws.
- The protection screws that are available as accessories comply with degrees of protection IP67.

To install the device, perform the following work steps:

- Checking the package contents
- Installing and grounding the device
- Connecting the power supply
- Operating the device
- Connecting data cable

2.1 Checking the package contents

☐ According to the device variant, check whether the package contains all items listed in the scope of delivery.
See “Scope of delivery, order number, and accessories” on page 53.

☐ Check the individual parts for transport damage.

2.2 Installing and grounding the device

2.2.1 Installing the device onto or on a flat surface

You have the option of attaching the device with suitable hardware to a vertical flat surface.

Proceed as follows:

- ☐ Prepare the assembly at the installation site.
  See “Dimension drawings” on page 46.
- ☐ Install the device with 4 x M5 screws on a flat surface > Width 300 mm × Height 210 mm.
- ☐ Seal all unused sockets or ports with protection screws.

2.2.2 Grounding the device

⚠ WARNING

ELECTRIC SHOCK
ÉLECTROCUTION

Ground the device before connecting any other cables.

Mettez à la terre l’appareil avant de brancher tout autre câble.

Failure to follow this instruction can result in death, serious injury, or damage of equipment.

Le non-respect de cette instruction peut entraîner la mort, des blessures graves ou des dommages matériels.

Grounding the device is by means of a separate ground connection on the device. The overall shield of a connected shielded twisted-pair cable is connected to the metal housing as a conductor. The device variants have a connection for protective grounding, see Figure 5.

- ☐ Terminate the ground conductor between the fastening plates.
- ☐ Make sure the fastening plates cover the stripped part of the ground conductor completely.
- ☐ Tighten the grounding screw (M4×10mm) with a tightening torque of 3 Nm ± 0.5 Nm.

Note: Use toothed washers to ensure good electrical conductivity for the connection.

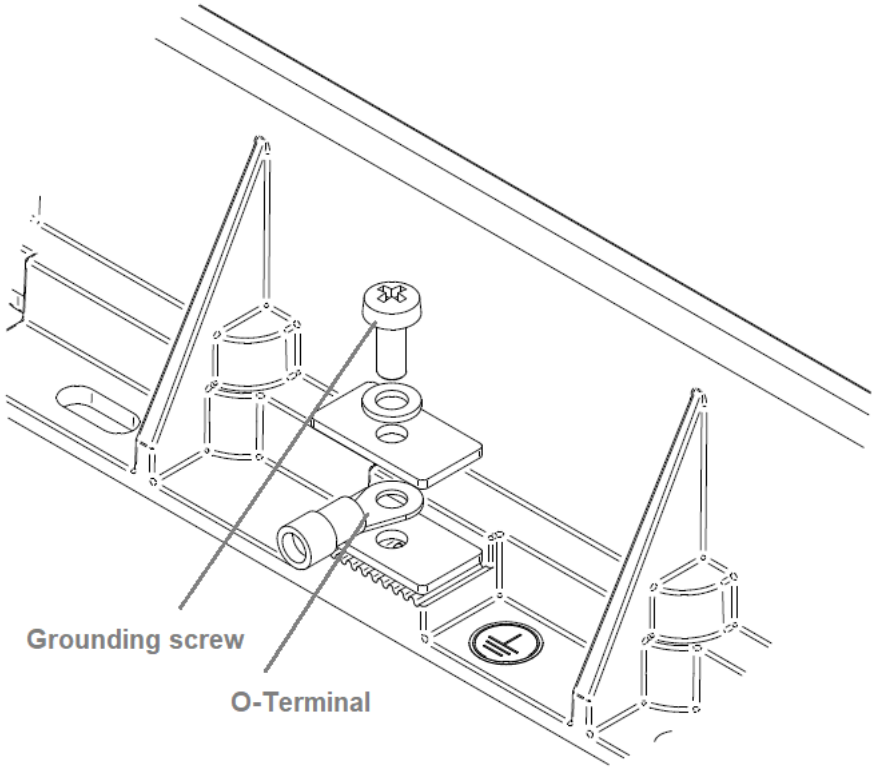

Figure 5: Connection for Protective Ground

2.3 Installing the antennas

⚠ WARNING

ELECTRIC SHOCK

ÉLECTROCUTION

Mount the antennas outdoors only with the surge protection device BAT ANT-Protector m-f.

Montez les antennes uniquement à l'extérieur avec le dispositif de protection contre les surtensions BAT ANT-Protector m-f.

See "Scope of delivery, order number, and accessories" on page 53.

Failure to follow this instruction can result in death, serious injury, or damage of equipment.

Le non-respect de cette instruction peut entraîner la mort, des blessures graves ou des dommages matériels.

⚠ WARNING

ELECTRIC SHOCK OR FALLING

ÉLECTROCUTION OU CHUTE

Avoid mounting the antenna near power lines.

Évitez de monter l'antenne à proximité des lignes électriques.

When installing an antenna from a ladder or elevating equipment, take precautions to avoid falling and ensure the equipment is securely positioned on solid ground.

Lors de l'installation d'une antenne depuis une échelle ou un équipement élévateur, prenez des précautions pour éviter les chutes et assurez-vous que l'équipement est solidement positionné sur un sol stable.

Failure to follow this instruction can result in death, serious injury, or damage of equipment.

Le non-respect de cette instruction peut entraîner la mort, des blessures graves ou des dommages matériels.

The device has connections for external antennas. These connectors are N female sockets.

On delivery, the antenna connections are sealed with protection caps. When an antenna port is not used, Hirschmann recommends using an N-Abschl-Wdst. 50 Ohm resistor to avoid suffering from signal interference.

BAT-ANT-Protector m-f connectors

BAT-ANT-Protector m-f is the surge protection device. The BAT-ANT-Protector m-f is recommended for protecting the interior electronics of the device with outdoor antennas. Despite outer surge protection measures, partial discharges can still cause surges that can damage the device. The BAT-ANT Protector m-f should be mounted as close as possible to the device.

The BAT-ANT-Protector m-f provides two connectors, one for connecting to the Access Point and the other for connecting to the antenna (see Figure 6).

Figure 6: BAT-ANT-Protector m-f connectors

1 – N socket for connection to the antenna (unprotected end)
2 – N plug for connection to the Access Point (protected end marked in red)

Prerequisites

- ☐ Only qualified personnel are permitted to install the device in accordance with the relevant national installation and safety rules. Its usage is only permitted under the conditions stated and shown in this instruction.
- ☐ The BAT-ANT-Protector m-f and the equipment connected to it can be destroyed by EM surges exceeding the given specification, for example due to a direct lightning strike.
- ☐ The operational voltage of the system/equipment to be protected must not exceed the maximum permissible operating voltage (rated voltage) of the BAT-ANT-Protector m-f.
- ☐ Disconnect or switch off inline equipment when installing or removing the BAT-ANT-Protector m-f.
- ☐ Do not open the BAT-ANT-Protector m-f. Opening the BAT-ANT Protector m-f will void the warranty and may result in the accidental destruction of electronic components.
- ☐ If exposed to extreme environmental conditions, especially icy conditions or a polluted atmosphere, the connectors should be covered with a self-

vulcanizing tape or a cold shrink tube.

- ☐ If the BAT-ANT-Protector m-f is mated with connectors made of copper-alloy base material and trimetal or nickel plating, the connector area must be taped to improve long-term durability.
- ☐ All pertinent country, state, regional, and local safety regulations must be observed when installing and using this product. For reasons of safety and to help ensure compliance with documented system data, only the manufacturer should perform repairs to components. This equipment must only be installed and serviced by qualified personnel.

Work steps

- ☐ Remove the pre-mounted protection caps from the antenna connections.
- ☐ Mount the BAT-ANT-Protector m-f as described below.

▶ Connecting to the Access Point

To connect the BAT-ANT-Protector m-f to the Access Point proceed as follows:

- ☐ Connect one end of the adapter cable supplied with the antenna to the N plug of the BAT-ANT-Protector m-f.
- ☐ Connect the other end of the adapter cable to the antenna output of the Access Point.

Note: Depending on the type, you can connect the BAT-ANT-Protector m-f directly to the antenna output of the Access Point. In this case you do not need an adapter cable.

▶ Connecting to the antenna

To connect the BAT-ANT-Protector m-f to the antenna proceed as follows:

- ☐ Connect one end of the antenna cable to the N socket of the BATANT-Protector m-f.
- ☐ Connect the other end of the antenna cable to the antenna input.
- ☐ Seal an unused socket with a terminating resistor to avoid interferences from radio signals. The terminating resistor is available as accessory.

Note: Depending on the connector type, you may require an adapter or an adapter cable.

▶ Grounding the BAT-ANT-Protector m-f

Ground the BAT-ANT-Protector m-f appropriately according to all national, state, and local regulations to ensure that any surges can be conducted away from the device to the building’s earthing system.
Fix a cable lug with a nut as shown in Figure 7.
Note: Use a sufficiently sized grounding cable (min. 16 mm2 or 0.02 in2 / AWG 6) as short a distance as possible (max. 0.5 m or 19.69 in).

Figure 7: Grounding the BAT-ANT-Protector m-f

You will find information on setting the transmit power in chapter.

2.4 Connecting the power supply

⚠ WARNING

ELECTRIC SHOCK

ÉLECTROCUTION

Before connecting the electrical wires, always verify that the requirements listed are complied with.

Avant de connecter les fils électriques, vérifiez toujours que les exigences énumérées sont respectées.

See “Requirements for connecting electrical wires” on page 7.
See “Requirements for connecting the supply voltage” on page 7.

Failure to follow this instruction can result in death, serious injury, or damage of equipment.

Le non-respect de cette instruction peut entraîner la mort, des blessures graves ou des dommages matériels.

The supply voltage is electrically isolated from the casing.
You have the option of supplying the supply voltage redundantly, without load distribution.

2.4.1 Supply voltage (24 V DC / 110 V DC)

One 4-pin 7/8" plug is available for the power supply to the device. The prescribed tightening torque can be found in “Technical data” section on page 45.

The supply voltage is connected to the device casing through protective elements exclusively.

Connect the electrical wires to the socket according to the pin assignment.

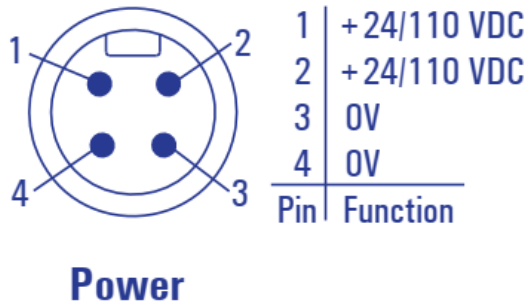

Figure 8: Pin assignment of the power supply socket

2.4.2 Supply voltage with PoE

Your device is a PD. An 8-pin, “X”-coded M12 socket is available for PoE port.

PSE (power sourcing equipment) connected via a twisted pair cable on the PoE PD port serves as the PoE power supply voltage. The PoE power supply means that no separate power supply is required for your device.

Connect the electrical wires to the socket according to the pin assignment.

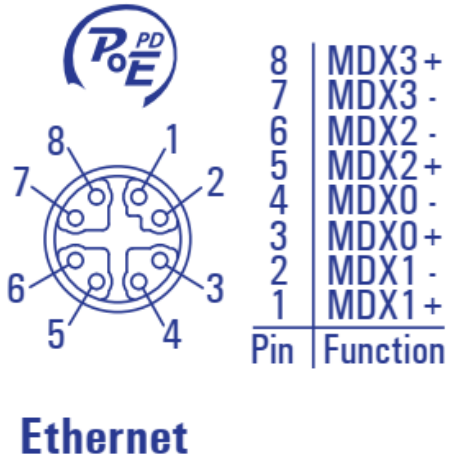

Figure 9: Pin assignment of the Ethernet socket

2.5 Operating the device

⚠ WARNING

ELECTRIC SHOCK

ÉLECTROCUTION

Before connecting the electrical wires, always verify that the requirements listed are complied with.

Avant de connecter les fils électriques, vérifiez toujours que les exigences énumérées sont respectées.

See “Requirements for connecting electrical wires” on page 7.
See “Requirements for connecting the supply voltage” on page 7.

Failure to follow this instruction can result in death, serious injury, or damage of equipment.

Le non-respect de cette instruction peut entraîner la mort, des blessures graves ou des dommages matériels.

NOTICE

MATERIAL DAMAGE

DAMMAGES MATÉRIELS

In a PoE installation, use only devices that comply with the IEEE 802.3at/bt standard.

Dans une installation PoE (Power over Ethernet), n’utilisez que des dispositifs conformes à la norme IEEE 802.3at/bt.

Failure to follow this instruction can lead to equipment damage.

Le non-respect de cette instruction peut entraîner des dommages matériels.

By connecting the supply voltage via a connector, you start the operation of the device.

Proceed as follows:
☐ Connect the power supply cable.
☐ Enable the supply voltage.

2.6 Connecting data cable

Note the following general recommendations for data cable connections in environments with high electrical interference levels:

- Keep the length of the data cables as short as possible.
- Use optical data cables for the data transmission between the buildings.
- When using copper cables, provide a sufficient separation between the power supply cables and the data cables. Ideally, install the cables in separate cable channels.
- Verify that power supply cables and data cables do not run parallel over longer distances. To reduce inductive coupling, verify that the power supply cables, and data cables cross at a 90° angle.
- Use shielded data cableB s for gigabit transmission via copper cables, for example SF/UTP cables according to ISO/IEC 11801. Exclusively use shielded data cables to meet EMC requirements according to EN 50121-4 and marine applications.
- Connect the data cables according to your requirements.
  See “Ethernet ports” on page 20.
- You can find the prescribed tightening torque of the locking screw in chapter “General technical data” on page 45.

3 First login (Password change)

To help prevent undesired access to the device, it is imperative that you change the default password during initial setup.

3.1 First login on DAP847-XXA

Perform the following steps:

☐ By default, DAP847-XXA will broadcast the WLAN ‘mywifi-xxxx’ (xxxx = the last two bytes of the access point MAC address). You can connect to ‘mywifi-xxxx’ and browse http://find.dragonflyap.com:8080 to access the access point web page.

Note: It is recommended to access the web page in chrome browser for the best possible user experience.

☐ Log on to the device by choosing “Administrator” as user and the default password “admin”.

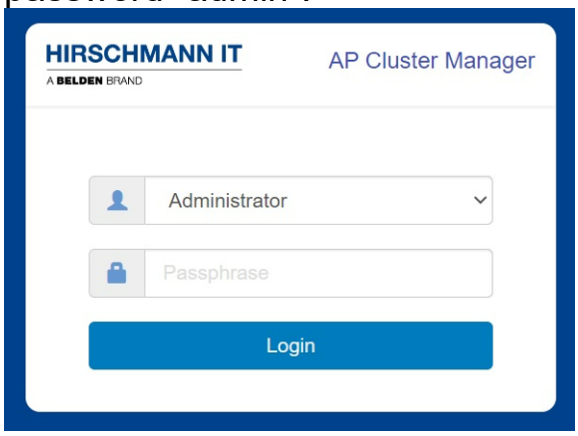

Figure 10: Administrator login page

☐ Select “DAC” for DAC mode, or “Cluster” for cluster mode.

▶ If select “DAC” mode, you need input the management server (DAC) address to convert DAP847-XXA to DAC mode, for more configuration, please refer to DAC847-A User Manual.

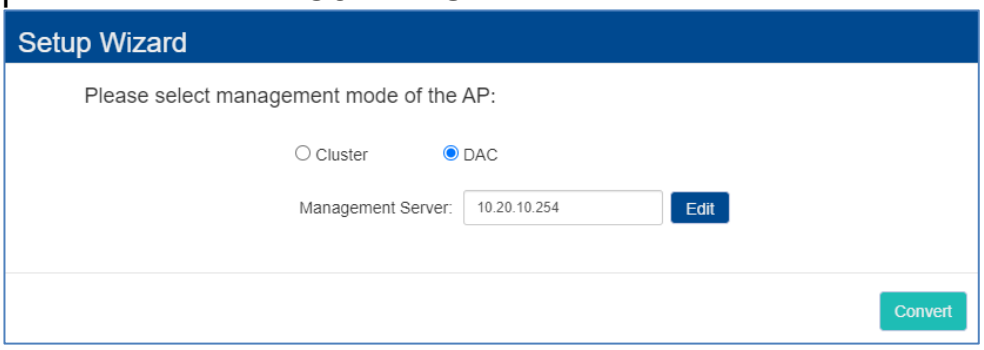

Figure 11: DAC Mode selection

- If select “Cluster” mode, a popup Setup Wizard displays.

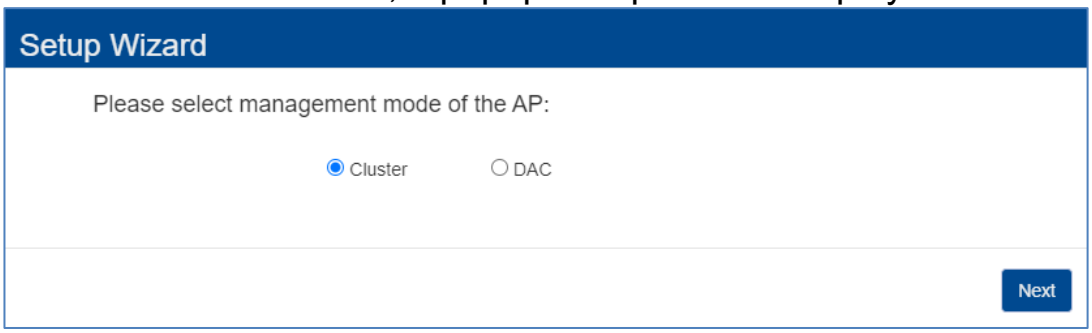

Figure 12: Cluster mode selection

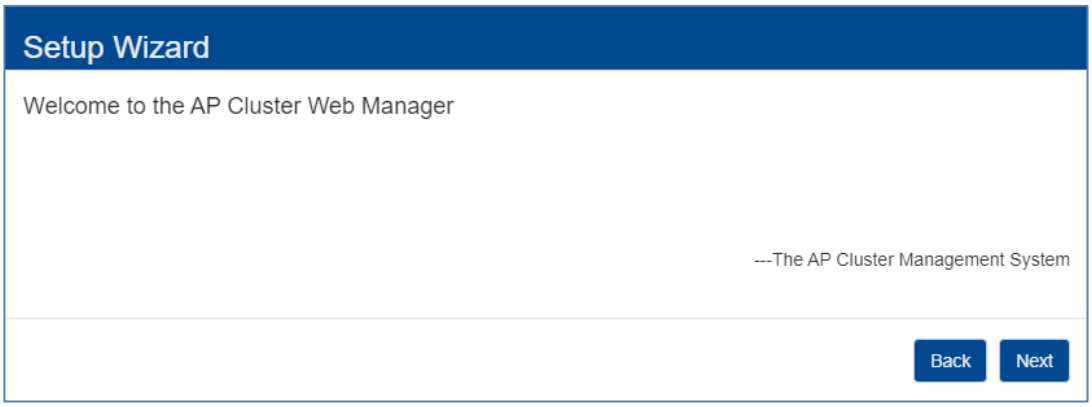

Figure 13: Access point cluster web manager

Note: There are 3 pre-configured login accounts: Administrator, Viewer and Guest Manager. You can modify the account password, but the account name is not modifiable.

- Administrator can set up and check the access point status.
- Viewer can check the access point status ONLY.
- Guest Manager can check the access point status and register accounts for portal authentication.

For more detailed configuration, please refer to DAP847-XXA User Manual in https://catalog.belden.com.

The device prompts you to type in a new password.

☐ Type in your new password.
Choose a password that contains at least 8 characters, which includes upper-case characters, lower-case characters, numerical digits and special characters.

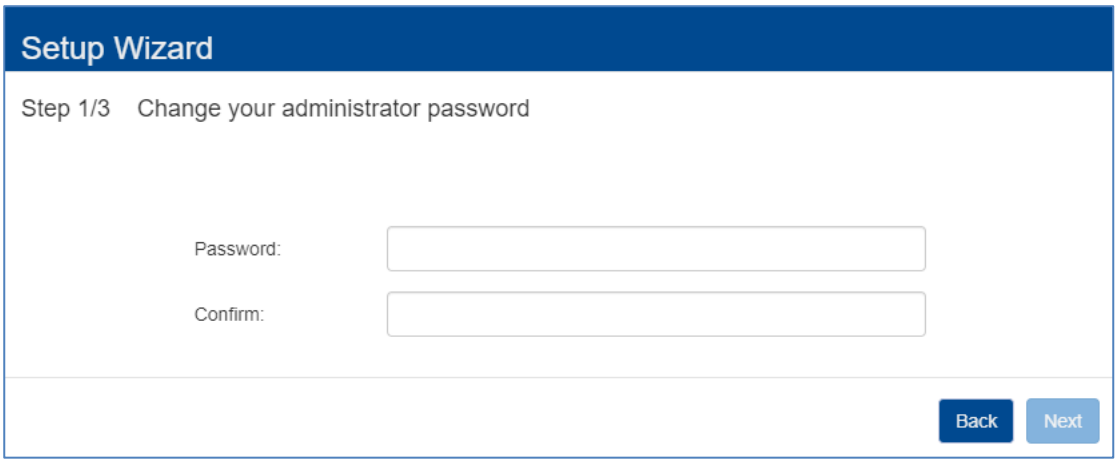

Figure 14: Password change wizard

☐ Confirm your new password.
Note: The page below displays to select the country or region.

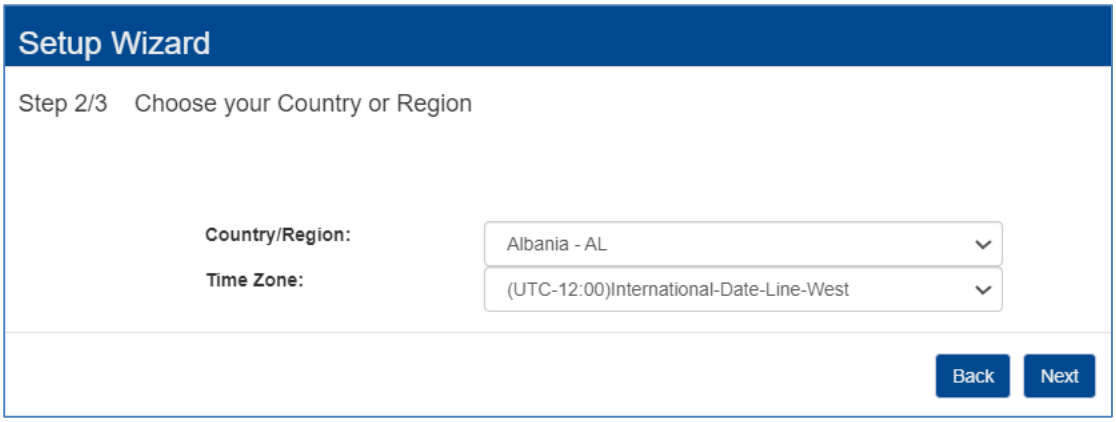

Figure 15: Country or Region selection page

3.2 First login on DAP847-XXC

Perform the following steps:

☐ DAP847-XXC can obtain an IP address from a DHCP server. You can check the IP address on the uplink switch's ARP table of the DHCP server, or by accessing the DAP847-XXC console using the `ifconfig br-wan` command. By default, the DAP847-XXC IP address is set as 192.168.1.254 in case of no DHCP server in the network. You can browse https://dap-rwc ip address to access the management web page.

Note: It is recommended to access the web page in chrome browser for the best possible user experience.

☐ Log on to the device by choosing "Administrator" as user and the default password "admin".

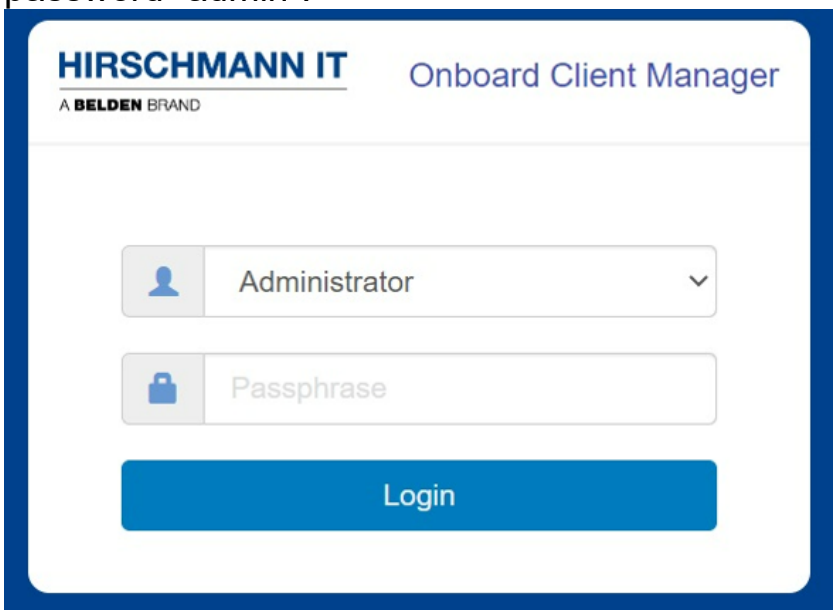

Figure 16: Administrator login page

☐ A popup Setup Wizard displays.

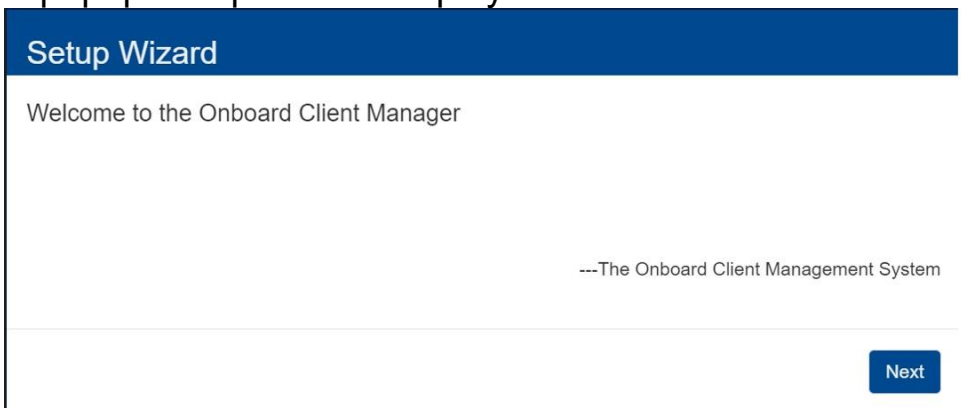

Figure 17: Client cluster web manage

Note: There are 2 pre-configured login accounts: Administrator, Viewer. You can modify the account password, but the account name is not modifiable.
▶ Administrator can set up and check the Client status.
▶ Viewer can check the Client status ONLY.
For more detailed configuration, please refer to DAP847-XXC User Manual in https://catalog.belden.com.

The device prompts you to type in a new password.

☐ Type in your new password.
Choose a password that contains at least 8 characters, which includes upper-case characters, lower-case characters, numerical digits and special characters.

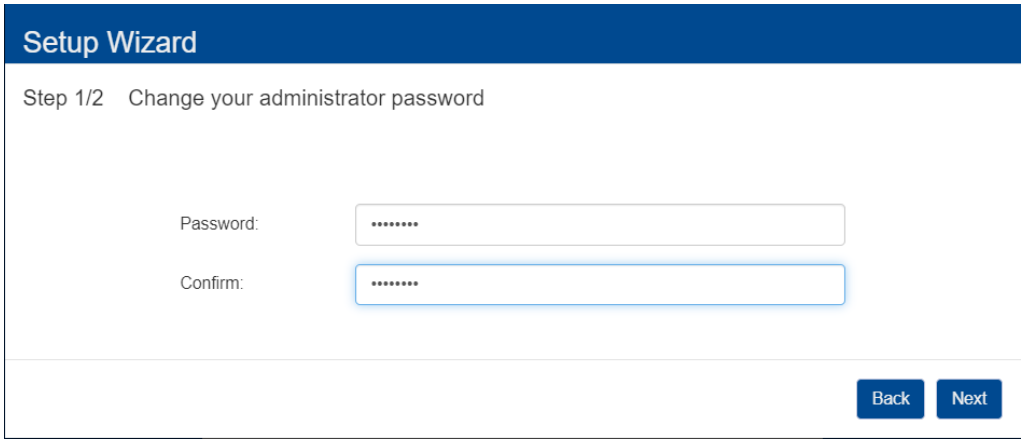

Figure 18: Password change wizard

☐ Confirm your new password.
Note: The page below displays to select the country or region.

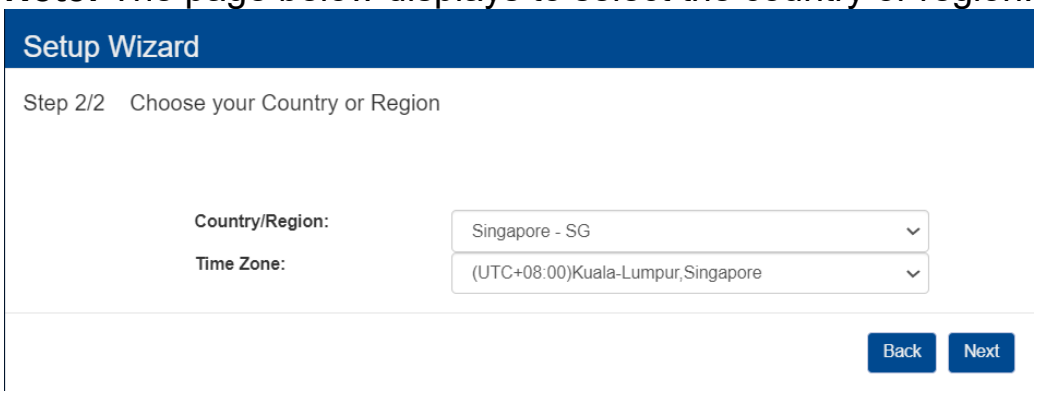

Figure 19: Country or Region selection page

4 Defining WLAN basic settings

4.1 Defining WLAN basic settings on DAP847-XXA

You have the following options to define the WLAN basic settings:

- via the wired local network (LAN)
- via the wireless network (WLAN) if the WLAN encryption (for example WPA2) is set accordingly in a device with a wireless interface and in the configuration computer

For more details, please refer to DAP847-XXA User Manual in https://catalog.belden.com.

4.2 Defining WLAN basic settings on DAP847-XXC

There is no WLAN setting involved on DAP847-XXC.

5 Maintenance and service

- ☐ Hirschmann IT largely avoided using high-wear parts when designing this device. The parts subject to wear and tear are dimensioned to last longer than the lifetime of the product when it is operated normally. Operate this device according to the specifications.
- ☐ Hirschmann IT is continually working on improving and developing their software. Check regularly whether there is an updated version of the software that provides you with additional benefits. You can find information and software downloads on the Hirschmann IT product pages at: https://catalog.belden.com
- ☐ According to the pollution degree of the operating environment, check at regular intervals that ports in the device are not obstructed.

Note: You can find information on settling complaints at:
http://www.beldensolutions.com/en/Service/Repairs/index.phtml

6 Disassembly

☐ Disconnect the data cable.
☐ Disable the supply voltage.
☐ Remove the antennas.
☐ Disconnect the grounding wire.

7 Technical data

7.1 General technical data

Dimensions W × H × D	DAP847	See “Dimension drawings” on page 46.
Weight	DAP847	2.5 kg (5.51 lb)
Supply voltage	Connection type	4-pin, 7/8’’ connector
		Tightening torque 2.5 Nm (22 lb-in)
	Rated voltage	DC Input: 24 V DC
	Rated current	DC Input: 1150 mA
	Maximum tolerances	DC Input: 16 V DC … 30 V DC
	Overload current protection on the device	fuse
Supply voltage	Connection type	4-pin, 7/8’’ connector
		Tightening torque 2.5 Nm (22 lb-in)
	Rated voltage	DC Input: 110 V DC
	Rated current	DC Input: 250 mA
	Maximum tolerances	DC Input: 77 V DC … 138 V DC
	Overload current protection on the device	fuse
Supply voltage	Connection type	8-pin, “X”-coded M12 socket for PoE port
		Tightening torque 0.6 Nm (5.3 lb-in)
	Rated voltage	PoE Input: 54 V DC
	Rated current	PoE Input: 500 mA
	Maximum tolerances	PoE Input: 42.5 V DC … 57 V DC
	Overload current protection on the device	Non-replaceable fuse
Climatic conditions during operation	Minimum clearance around the device	Top and bottom device side: 30 cm (11.81 in) Left and right device side: 2 cm (0.79 in)
	Ambient air temperature[a]	-40°C ... +70°C (-40° F ... +158° F)
	Humidity	0 % … 95 % (non-condensing)
Climatic conditions during storage	Ambient air temperature[a]	-40°C ... +85°C (-40° F ... +185° F)
	Humidity	0 % … 95 % (non-condensing)
Pollution degree		2
Wind resistance		Up to 100 MPH sustained winds Up to 165 MPH sustained gusts
Protection classes	Laser protection	Class 1 in compliance with IEC 60825-1
	Degree of protection	IP67

a. Temperature of the ambient air at 5 cm (2 in) from the device.

7.2 Dimension drawings

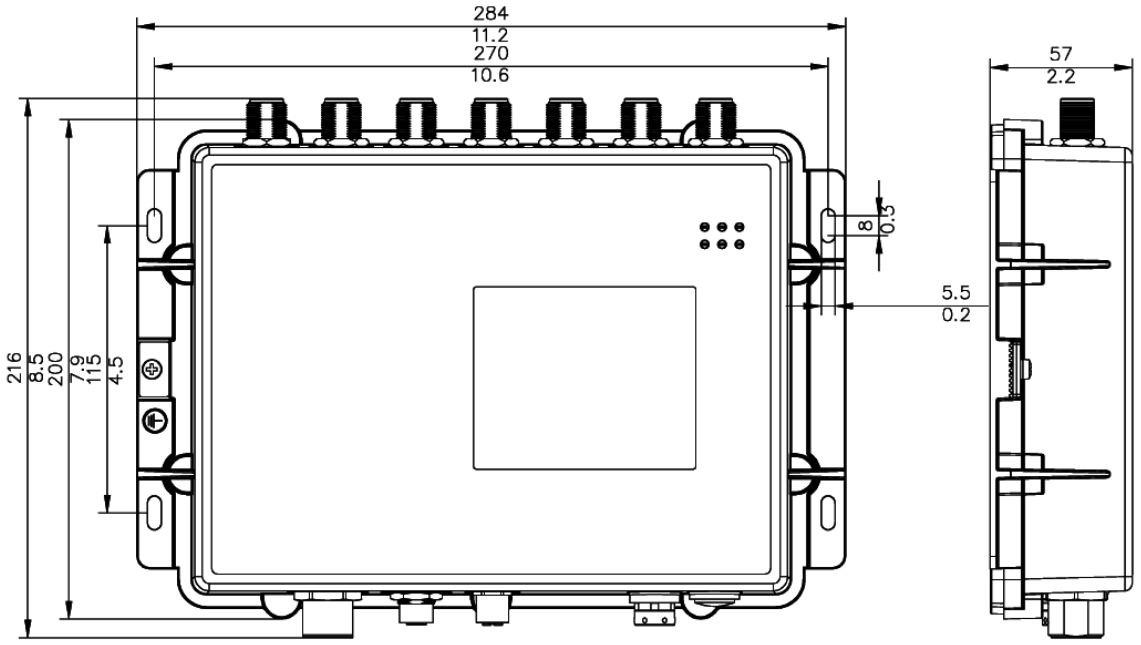

Figure 20: DAP847 dimensional measurements (unit: mm/inch)

7.3 WLAN module specifications

7.3.1 Radio technology

Antenna connection	Each WLAN module: 6 × N socket
Range	Depending on the antenna used, frequency range and data rate
Encryption	▶ Static WEP ▶ WPA3 Personal ▶ WPA2 Personal ▶ Both (WPA2 & WPA) ▶ Both (WPA3 & WPA2) ▶ WPA2 Enterprise ▶ WPA3 Enterprise ▶ Both (WPA2 & WPA)
Frequency range	▶ Support of 2.4 GHz: 2400 MHz to 2483.5 MHz ▶ Support of 5 GHz: 5150 MHz to 5250 MHz, 5250 MHz to 5350 MHz, 5470 MHz to 5730 MHz, 5735 MHz to 5875 MHz
Modulation technology	▶ 802.11b: BPSK, QPSK, CCK ▶ 802.11a/g/n/ac: BPSK, QPSK, 16-QAM, 64-QAM, 256-QAM ▶ 802.11ax: BPSK, QPSK, CCK, 16-QAM, 64-QAM, 256-QAM, 1024-QAM
Radio topology	WLAN Access-Point, MESH, Bridge

7.3.2 Roaming

- ▶ IEEE 802.11k (Radio Resource Measurement)
- ▶ IEEE 802.11v (Wireless Network Management)
- ▶ IEEE 802.11r (Fast Roaming)
- ▶ PMK Caching

7.3.3 Receiving sensitivity, and data rate of the WLAN

The values shown in the following table are the maximum values of the WLAN module. The values are in no case to be perceived as a guaranteed property of the overall product. For some country profiles, the module reduces data rate and transmits power automatically because of national standards.

Rate	Receive sensitivity (per chain)	
	2.4 GHz	5 GHz
1 Mb/s	-99	
11 Mb/s	-89	
6 Mb/s	-93	-91
54 Mb/s	-76	-74
HT20(MCS0/8)	-92	-90
HT20(MCS7/15)	-74	-72
HT40(MCS0/8)	-91	-88
HT40(MCS7/15)	-74	-70
VHT20(MCS0)	-92	-90
VHT20(MCS8)	-70	-68
VHT40(MCS0)	-91	-88
VHT40(MCS9)	-68	-64
VHT80(MCS0)		-86
VHT80(MCS9)		-61
HE20(MCS0)	-94	-92
HE20(MCS11)	-63	-62
HE40(MCS0)	-91	-89
HE40(MCS11)	-62	-60
HE80(MCS0)		-87
HE80(MCS11)		-58

Table 5: RF performance table for DAP847

7.4 EMC

EMC interference immunity			
EN 61000-4-2	Electrostatic discharge		
	Contact discharge		8 kV
	Air discharge		15 kV
EN 61000-4-3 EN 50121-4 EN 50121-3-2	Electromagnetic field		
	80 MHz ... 1000 MHz		max. 20 V/m
	1000 MHz ... 6000 MHz		max. 20 V/m
EN 61000-4-4	Fast transients (burst)		
	Power line		2 kV
	Data line		1 kV
EN 61000-4-5	Voltage surges		
	Power line	line/line	2 kV
	Power line	line/ground	4 kV
	Data line	line/ground	4 kV
EN 61000-4-6	Conducted interference voltages		
	150 kHz ... 80 MHz		10 V

EMC interference emission		
EN 55032	Class A	
FCC 47 CFR Part 15	Class A	

7.5 Immunity

Immunity	
Vibration	IEC 60068-2-6 Test Fc test level according to IEC 61131-2
	IEC 60068-2-64 test level according to IEC 61131-2
Shock	IEC 60068-2-27 Test Ea level according to IEC 61131-2

7.6 Network range

10/100/1000/2500 Mbit/s twisted pair port	
Length of a twisted pair segment	max. 100 m (328 ft) (for Cat5e cable)

7.7 Power consumption/power output

Name	Maximum power consumption output	Power
DAP847	24 W	68.26 Btu (IT)/h

8 Scope of delivery, order number, and accessories

Scope of delivery

Amount	Article	Order number	Comments
1 ×	DAP 847 Device		
1 ×	General safety instructions		
1 ×	Information sheet and Outdoor safety instructions		
1 ×	RKC40/9, 7/8" socket: 7/8" connector, 4-pin for Power supply	942 086 004	Only for device with PSU

Ordered on demand

Amount	Article	Order number
Ordered on demand	EM12G OCTOPUS: Field attachable Gigabit Ethernet connector, M12 male, 8-pole, “X”-coded	942 083 001
	Terminal Cable, M12-4pin to DB9: Terminal cable, Side A: M12 “A”-coded 4-pin connector, Side B: Sub-D connector, 9-pin	943 902 001
	BAT-ANT-Protector m-f	943 903 373
	N-Abschl-Wdst. 50 Ohm	942 118 001
	BAT-CLB-RJ142-5 N m-m	942 325 503
	BAT-ANT-N-MiMoDB-11N-IP65-R	943 981 117

Order number

Product Code	Order number
DAP847-RWAPKT899THH	9AA 101 001
DAP847-RWAPKT899EHH	9AA 101 002
DAP847-RWAKKT899THH	9AA 101 003
DAP847-RWAKKT899EHH	9AA 101 004
DAP847-RWCPKT899THH	9AA 101 005
DAP847-RWCPKT899EHH	9AA 101 006
DAP847-RWCKKT899THH	9AA 101 007
DAP847-RWCKKT899EHH	9AA 101 008

Accessories

Accessories	Order number
EM12G OCTOPUS	942 083 001
Terminal Cable, M12-4pin to DB9	943 902 001
BAT-ANT-Protector m-f	943 903 373
N-Abschl-Wdst. 50 Ohm	942 118 001
BAT-CLB-RJ142-5 N m-m	942 325 503
BAT-ANT-N-MiMoDB-11N-IP65-R	943 981 117

Note: Products recommended as accessories may have characteristics that do not fully correspond to those of the corresponding product. This may limit their possible usage in the overall system.

9 Underlying technical standards

Standards	Name
EN 300 328	Electromagnetic compatibility and radio spectrum matters (ERM) – bandwidth transfer systems – data transmission equipment operating in 2.4 GHz ISM band and using spread spectrum modulation technology.
EN 301 893	Broadband radio access networks (BRAN) – 5 GHz high performance Remote Local Area Network (RLAN)
EN 302 502	Broadband Radio Access Networks (BRAN); 5,8 GHz Broadband Fixed Wireless Access (BFWA)
EN 50385	Product standard to demonstrate the compliance of base station equipment with radiofrequency electromagnetic field exposure limits (110 MHz - 100 GHz), when placed on the market
EN 301 489-1	Electromagnetic compatibility for radio equipment and services
EN 301 489-17	Electromagnetic compatibility (EMC) for radio equipment and services – specific conditions for 2.4 GHz broadband transmission systems and 5 GHz high-performance RLAN equipment
UL 62368-1	Audio/video, information, and communication technology equipment - Part 1: Safety requirements
CAN/CSA 22.2 No. 62368-1	Information Technology Equipment – Safety – Part 1: General Requirements
IEC/EN 62368-1	Equipment for audio/video, information, and communication technology - Part 1: safety requirements
EN 60950-22	Installations of IT equipment – Security – Part 22: Outdoor Equipment
EN 55032	Electromagnetic compatibility of multimedia equipment –Emission Requirements
EN 50121-3-2	Railway applications - Electromagnetic compatibility - Part 3-2: Rolling stock - Apparatus
EN 50121-4	Railway applications - Electromagnetic compatibility - Part 4: Emission and immunity of the signalling and telecommunications apparatus
EN 50155	Railway applications – Rolling Stock-Electronic equipment used on rolling stock
EN 45545-2	Fire protection on railway vehicles
EN/IEC 61000-6-4	Electromagnetic compatibility – Emission standard for industrial environments
EN/IEC 61000-6-2	Immunity for industrial environments
EN 61131-2	Programmable controllers – Part 2: Equipment requirements and tests
FCC 47 CFR Part 15	Code of Federal Regulations
Wi-Fi 6	IEEE 802.11ax - IEEE Standard for Information Technology-Telecommunications and Information Exchange between Systems Local and Metropolitan Area Networks-Specific Requirements Part 11: Wireless LAN Medium Access Control (MAC) and Physical Layer (PHY) Specifications Amendment 1: Enhancements for High-Efficiency WLAN

The device has an approval based on a specific standard exclusively if the approval indicator appears on the device casing.

The device fulfills the technical standards named in their current versions.

A Further support

Technical questions

For technical questions, please contact any Hirschmann IT dealer in your area or Hirschmann IT directly.

You find the addresses of our partners on the Internet at http://www.hirschmann.com.

A list of local telephone numbers and email addresses for technical support directly from Hirschmann IT is available at: https://hirschmann-it-support.belden.com.

This site also includes a free knowledge base and a software download section.

HIRSCHMANN IT

A BELDEN BRAND